United States Department of Agriculture

Natural Resources Conservation Service

Part 634 Hydraulics
National Engineering Handbook

Chapter 5 Flow Measurement

DRAFT

Issued _____

In accordance with Federal civil rights law and U.S. Department of Agriculture (USDA) civil rights regulations and policies, the USDA, its Agencies, offices, and employees, and institutions participating in or administering USDA programs are prohibited from discriminating based on race, color, national origin, religion, sex, gender identity (including gender expression), sexual orientation, disability, age, marital status, family/parental status, income derived from a public assistance program, political beliefs, or reprisal or retaliation for prior civil rights activity, in any program or activity conducted or funded by USDA (not all bases apply to all programs). Remedies and complaint filing deadlines vary by program or incident.

Persons with disabilities who require alternative means of communication for program information (e.g., Braille, large print, audiotape, American Sign Language, etc.) should contact the responsible Agency or USDA's TARGET Center at (202) 720-2600 (voice and TTY) or contact USDA through the Federal Relay Service at (800) 877-8339. Additionally, program information may be made available in languages other than English.

To file a program discrimination complaint, complete the USDA Program Discrimination Complaint Form, AD-3027, found online at How to File a Program Discrimination Complaint and at any USDA office or write a letter addressed to USDA and provide in the letter all of the information requested in the form. To request a copy of the complaint form, call (866) 632-9992. Submit your completed form or letter to USDA by: (1) mail: U.S. Department of Agriculture, Office of the Assistant Secretary for Civil Rights, 1400 Independence Avenue, SW, Washington, D.C. 20250-9410; (2) fax: (202) 690-7442; or (3) email: program.intake@usda.gov.

USDA is an equal opportunity provider, employer, and lender.

Chapter 5 Flow Measurement

Table of Contents

634.0500 Water Flow Measurements 5.1
634.0501 Measurements in Pipelines 5.1
634.0502 Measurements in Open Channels 5.10
634.0503 Laser-Doppler and Particle-Velocity Measurements 5.12
634.0504 Sharp-crested Weirs 5.12
634.0505 Broad-crested Weirs 5.19
634.0506 Submerged Weir Flow 5.20
634.0507 Flumes 5.22
634.0508 References 5.24

Table of Figures

Figure 5-1: Schematic of flow through an orifice plate in a pipe. 5.1
Figure 5-2: Contraction, velocity, and discharge coefficients for flow through orifices: (a) sharp thick wall, (b) rounded thick wall, (c) chiseled thin wall, (d) sharp thin wall. 5.2
Figure 5-3: Schematic of orifice plate 5.2
Figure 5-4: Plexiglas pipe with an orifice meter and piezometric tubes, used in the laboratory to demonstrate orifice flow 5.3
Figure 5-5: Schematic of a Venturi meter 5.4
Figure 5-6 Plexiglas Venturi meter with piezometric tubes, to demonstrate flow through the meter. 5.4
Figure 5-7: Venturi meter installed in a 4-inch pipeline, with manometer lines attached at the upstream end and at the throat of the meter. 5.5
Figure 5-8: Schematic of a nozzle meter 5.6
Figure 5-9: Schematic of an elbow meter 5.7
Figure 5-10: Values of the discharge can be interpolated graphically from the rating curve of a given device 5.8
Figure 5-11: Ultrasonic flowmeter strapped to a PVC pipe 5.9
Figure 5-12 Depth gage showing water surface elevation 5.10
Figure 5-13: Point gage in laboratory flume with Vernier scale reading of *23.7*. 5.11
Figure 5-14: Suppressed sharp-crested weir in a rectangular channel. 5.13
Figure 5-15: Contracted sharp-crested weir in a rectangular channel. 5.13
Figure 5-16: Contracted sharp-crested weir in a rectangular channel. 5.14
Figure 5-17: Contracted rectangular weir with $n = 1$ or $n = 2$ contractions. 5.15

DRAFT

Figure 5-18: Contracted weir in a laboratory flume. 5.16
Figure 5-19 Flow over a Cipoletti weir in Grand Junction, CO 5.16
Figure 5-20: Cipoletti weir schematic. 5.17
Figure 5-21: Schematic of a triangular or v-notch weir. 5.17
Figure 5-22: V-notch, or triangular, weir in a laboratory flume. 5.18
Figure 5-23: Schematic of flow over a broad-crested weir. 5.19
Figure 5-24 Submerged weir flow. 5.20
Figure 5-25 Coefficient of submergence for sharp crested weirs. 5.21
Figure 5-26: Long throated Flume Hollister, ID 5.22
Figure 5-27 Parshall flume Ft. Collins, CO 5.23

DRAFT

634.0500 Water Flow Measurements

A. Water flow measurement devices and techniques for measuring pipe flow and open channel flow will be presented in this section. For additional details, refer to the USBR/USDA-NRCS/USDA-ARS (2001) *Water Measurement Manual*, available online at: https://www.usbr.gov/tsc/techreferences/mands/wmm/WMM_3rd_2001.pdf

634.0501 Measurements in Pipelines

A. Most flow measurements in pipelines are accomplished by relating the pressure drop through a device to the discharge in the pipeline.

B. Orifice Meters

(1) An orifice meter consists of a reduction of the diameter of the flow by means of a ring inserted between two sections of a pipe. A schematic of an orifice meter is shown in figure 5-1.

Figure 5-1: Schematic of flow through an orifice plate in a pipe.

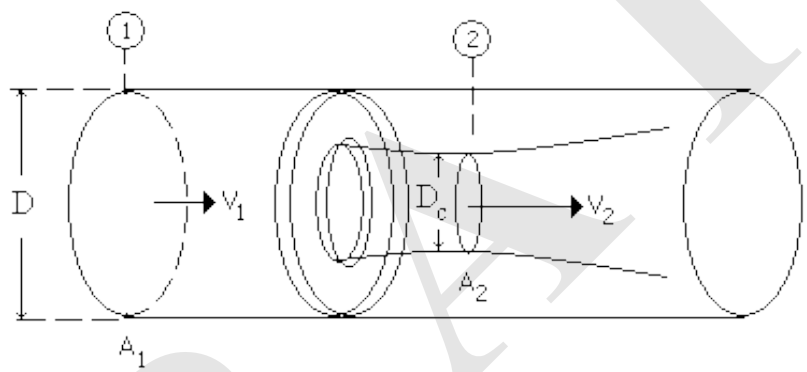

(2) Downstream of the orifice, due to the curvature of the streamlines detaching from the orifice, the flow cross-section contracts such that the area at this *vena contracta* is smaller than the area of the orifice. Let A_o be the area of the orifice, then, the area of the vena contracta can be written as $A_2 = C_c A_o$, where C_c (a value less than 1.0) is known as the *contraction coefficient*.

(3) If the contraction of the flow does not occur, an ideal velocity at section 2, say, V_i, could be calculated in terms of continuity, i.e., $V_1 A_1 = V_i A_o$. The actual velocity at the vena contracta can be calculated by $V_2 = C_v V_i$, where C_v is a velocity coefficient.

(4) The theoretical discharge would be $Q_i = V_i A_o$, however, the real discharge is calculated as $Q = V_2 A_2 = (C_v V_i)(C_c A_o) = (C_c C_v)(V_i A_o) = C_d Q_i$. Thus, we have introduced a discharge coefficient $C_d = C_c C_v$ to calculate the actual discharge in terms of the theoretical discharge.

(5) Figure 5-2 below, shows typical values of the contraction (C_c), velocity (C_v), and discharge (C_d) coefficients for different orifices.

DRAFT

Figure 5-2: Contraction, velocity, and discharge coefficients for flow through orifices: (a) sharp thick wall, (b) rounded thick wall, (c) chiseled thin wall, (d) sharp thin wall.

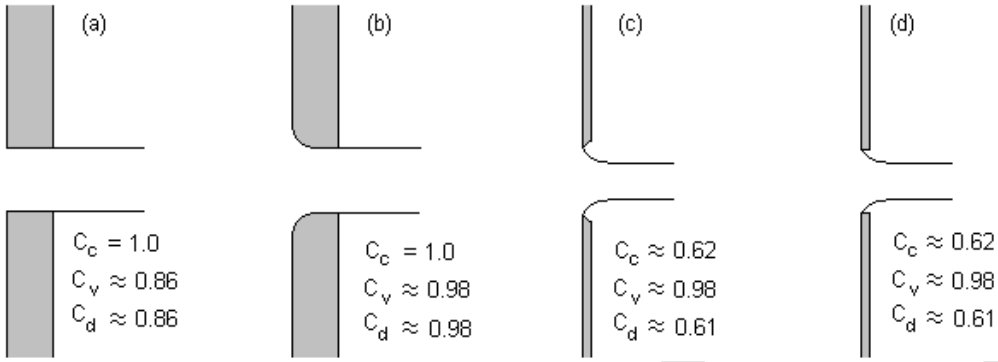

(6) To relate the discharge through the orifice to the drop in pressure between sections (1) and (2) in a horizontal pipeline, such as in Figure 5-1, the Bernoulli equation is used. Including a discharge coefficient, the discharge through the orifice is given by

$$Q = C_d A_1 A_2 \sqrt{\frac{2g(h_1 - H_2)}{A_1^2 - A_2^2}} \qquad \text{(eq. 5-1)}$$

Where $h1$ and $h2$ are the piezometric heads at sections (1) and (2), respectively, with $h1 = z1 + p1/\square$, and $h2 = z2 + p2/\square$. If the orifice meter is in a horizontal pipeline, the piezometric heads may be written as $h1 = p1/\square$, and $h2 = p2/\square$. The piezometric heads are illustrated in figure 5-3 and figure 5-4.

Figure 5-3: Schematic of orifice plate

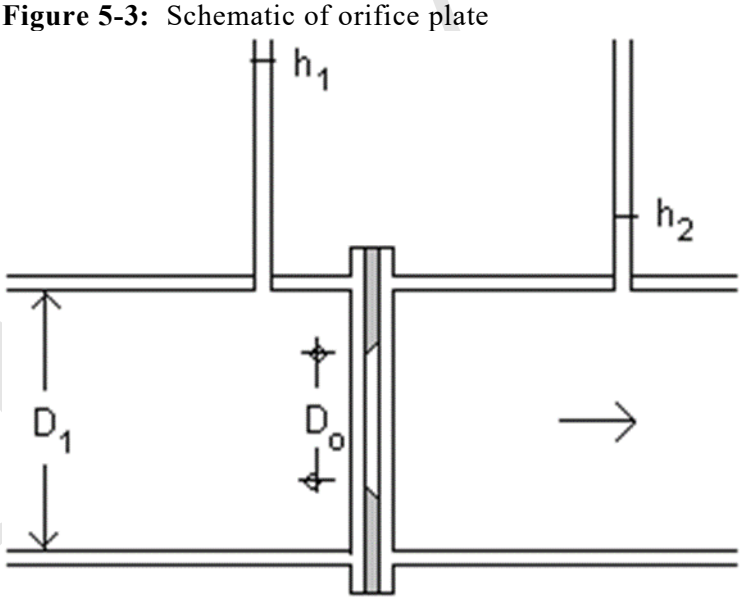

Figure 5-4: Plexiglas pipe with an orifice meter and piezometric tubes, used in the laboratory to demonstrate orifice flow

(7) Example 5-1 – Flow discharge through an orifice meter. An orifice meter of diameter $D_o = 0.30\ ft$ is placed in a pipeline of diameter $D_1 = 0.50\ ft$. Measurements of the piezometric heads upstream and downstream of the orifice indicate that $h_1 = 2.0\ ft$ and $h_2 = 1.3\ ft$. Using a chiseled thin-walled orifice with a contraction coefficient $C_c = 0.62$ and a discharge coefficient $C_d = 0.61$, determine the flow through the pipe.

The areas of the pipe and orifice are $A_1 = \pi D_1^2/4 = \pi(0.50)^2/4 = 0.196\ ft^2$, $A_o = \pi D_o^2/4 = \pi(0.30)^2/4 = 0.070\ ft^2$. The area of the vena contracta is $A_2 = C_c A_o = 0.62 \times 0.070 = 0.043\ ft^2$.

The discharge is:

$$Q = C_d A_1 A_2 \sqrt{\frac{2g(h_1 - H_2)}{A_1^2 - A_2^2}} = (0.61)(0.196)(0.043)\sqrt{\frac{2(32.2)(2.0 - 1.3)}{(0.196^2 - 0.043^2)}}$$

$$= 0.18 cfs$$

C. Venturi Meters

(1) A Venturi meter consists of a contracted section (known as the *throat*) (fig 5-5) connected to the pipe upstream through a short contraction, and to the pipe downstream through a longer expansion. D_1 is the diameter of the pipe while D_2, is the diameter of the throat. Figure 5.6 shows a clear venturi meter used to demonstrate head loss and flow through the meter. Figure 5.7 shows a venturi installed in a 4-inch pipe.

Figure 5-5: Schematic of a Venturi meter

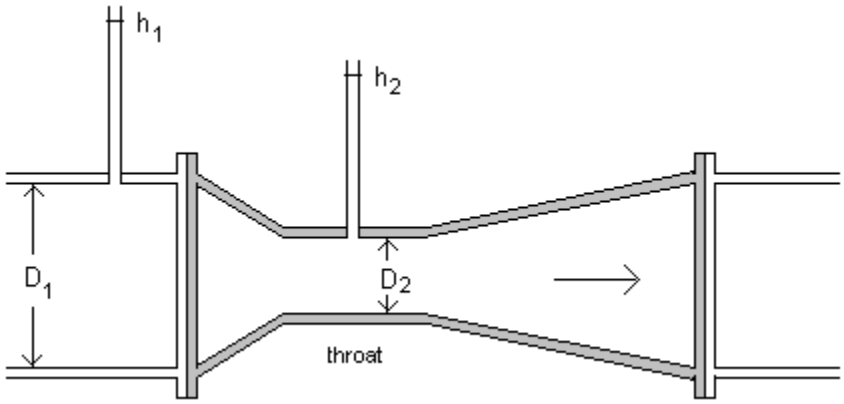

(2) The equation for the discharge in the Venturi meter is the same as for the orifice meter, except that A_2 corresponds to the throat area and is not calculated through a contraction coefficient. The discharge coefficient C_d can be found from calibration.

Figure 5-6 Plexiglas Venturi meter with piezometric tubes, to demonstrate flow through the meter.

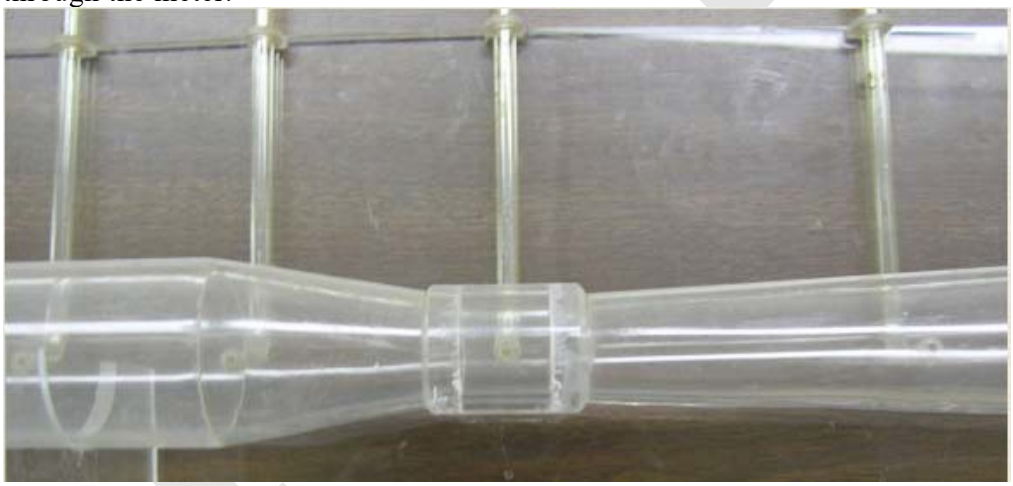

Figure 5-7: Venturi meter installed in a 4-inch pipeline, with manometer lines attached at the upstream end and at the throat of the meter.

(3) Example 5-2 - Calculations for Flow discharge through a Venturi meter. A Venturi meter with a throat diameter $D_2 = 0.5\ ft$ is installed in a pipe of diameter $D_1 = 1.0\ ft$. Measurements of the piezometric heads upstream and at the throat of the Venturi meter indicate that $h_1 = 2.5\ ft$ and $h_2 = 0.5\ ft$. With a discharge coefficient $C_d = 0.8$, determine the flow through the pipe.

(i) The areas of the pipe and of the Venturi's throat are:

$$A_1 = \pi D_1^2/4 = \pi(1.00)^2/4 = 0.785\ ft^2,$$

$$A_2 = \pi D_2^2/4 = \pi(0.50)^2/4 = 0.196\ ft^2.$$

(ii) The discharge is (equation 5-01):

$$Q = C_d A_1 A_2 \sqrt{\frac{2g(h_1 - H_2)}{A_1^2 - A_2^2}} = (0.80)(0.785)(0.196)\sqrt{\frac{2(32.2)(2.5-0.5)}{(0.785^2 - 0.196^2)}}$$

$$= 1.84 cfs$$

DRAFT

D. Nozzle Meters

(1) Nozzle meters reduce the flow cross-section, as does the orifice meter, by utilizing a nozzle attachment illustrated figure 5-8.

Figure 5-8: Schematic of a nozzle meter

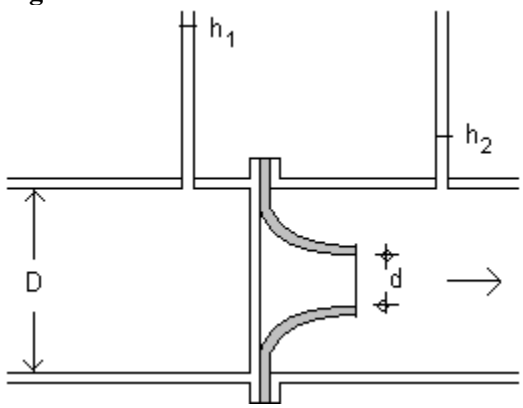

(2) The nozzle is characterized by its opening diameter *d*, and area, A_d. The equation for the discharge is written as:

$$Q = C_d A_d \sqrt{\frac{2g(h_1 - h_2}{1-\left(\frac{d}{D}\right)^4}} \qquad \text{(eq. 5-2)}$$

Where $h1$ and $h2$ are the piezometric heads at sections (1) and (2), respectively, and C_d is the discharge coefficient. The value of C_d depends on the type of nozzle and is obtained by calibration. Calibration can be performed by attaching the nozzle to a pipe and measuring the discharge *Q* through the pipe for different pressure drops ($h1$-$h2$). Since the diameters *d* and *D* can be measured or are provided by the manufacturer, equation 207 can be used to obtain the discharge coefficient Cd.

(3) Example 5-3 – Flow discharge through a nozzle meter. A nozzle meter whose opening has a diameter $d = 0.10\ ft$ is placed in a pipeline of diameter $D_1 = 0.25\ ft$. Measurements of the piezometric heads upstream and downstream of the orifice indicate that $h_1 = 2.5\ ft$ and $h_2 = 1.5\ ft$. With a discharge coefficient $C_d = 0.90$, determine the flow through the pipe.

(i) The area of the nozzle opening is:

$$A_d = \pi d^2/4 = \pi(0.10)^2/4 = 0.0078\ ft^2$$

(ii) The discharge is

$$Q = C_d A_d \sqrt{\frac{2g(h_1 - h_2}{1-\left(\frac{d}{D}\right)^4}} = (0.90)(0.0078)\sqrt{\frac{(2)(32.2)(2.5-1.5)}{1-\left(\frac{0.10}{0.25}\right)^2}}$$

$$= 0.057 cfs$$

DRAFT

E. Elbow Meters

(1) An elbow meter consists of attaching pressure transducers to the inner and outer walls of a pipe elbow, as shown in Figure 5-9.

(2) Let $\Delta p = |p_1 - p_2|$ be the absolute value of the pressure difference between the inner and outer walls of the elbow. Equivalently, the pressure difference can be written as $\Delta p = \omega \cdot \Delta h$, where ω is the specific weight of the liquid. The discharge through the elbow can be calculated as

$$Q = C\sqrt{\frac{\Delta p}{\omega}} = C\sqrt{\Delta h} \qquad \text{(eq. 5-3)}$$

where C is a calibration constant unique for a given elbow. If the pressure taps in the elbow meter were connected to a manometer, the quantity Δh could represent the reading in the manometer. Refer to section 2.2 *Piezometers and Manometers* for detailed explanation of manometers.

Figure 5-9: Schematic of an elbow meter

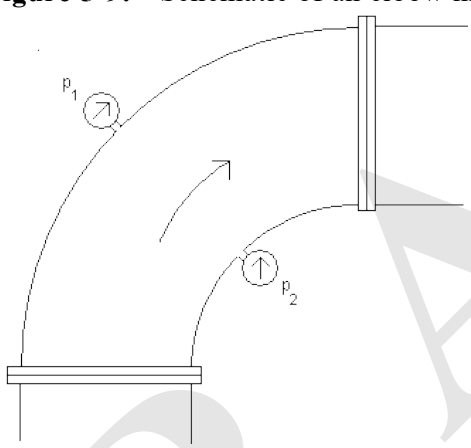

(3) Example 5-4 Flow discharge through an elbow meter. An elbow meter has been calibrated so that when the pressure difference between its inner and outer walls is measured in *ft*; the calibration constant is $C = 15.2$. Determine the discharge, in *cubic feet per second* (*cfs*), using eq 5-3 when $\Delta h = 0.5\ ft$

$$Q = C\sqrt{\Delta h} = 15.2\sqrt{0.5} = 10.75 cfs$$

DRAFT

F. For the orifice, nozzle, Venturi, and elbow meters, the discharge Q varies with the square root of the piezometric head drop Δh. A plot of this relationship is referred to as the *rating curve* (of characteristic shape). Note that cross-section rating curves in open channel flow have the same characteristic shape, but with the axes exchanged. The elbow meter used in the example above has a rating curve shown in the figure 5-10.

Figure 5-10: Values of the discharge can be interpolated graphically from the rating curve of a given device

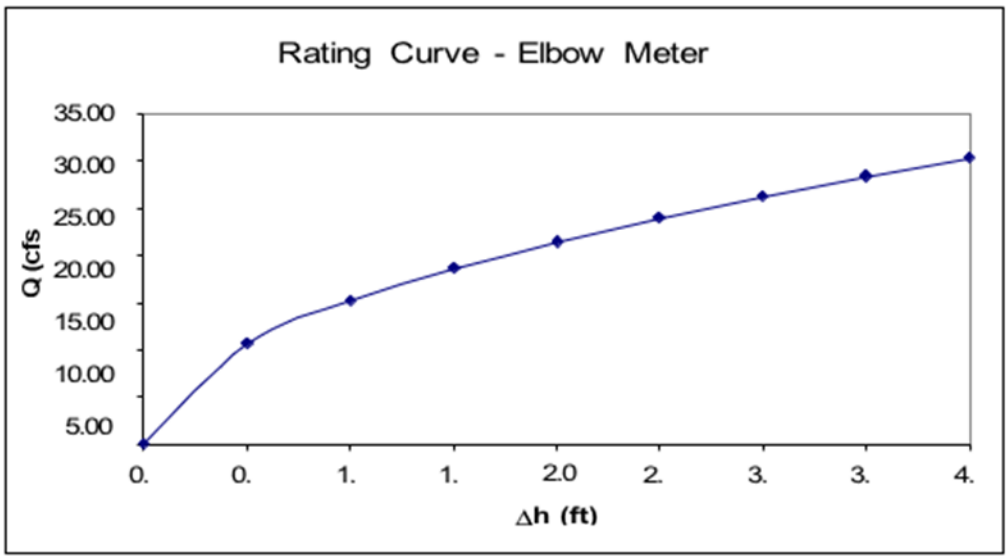

G. Magnetic and Ultrasonic Meters

(1) Magnetic meters are attached to the outside of a pipe or sometimes placed inside the pipe to measure discharge. In a magnetic meter the distortion in the magnetic field due to the moving water is related to the flow discharge. Magnetic meters are calibrated so that a voltage read in the meter can be converted to discharge. There are a variety of commercial magnetic meters. Instructions on the installation and operation of magnetic meters are available from the manufacturers.

(2) The ultrasonic flowmeter is a clamp-on device that measures pipeline flow using the principle of sonic beam phase shift (fig 5-11). Instructions on the installation and operation of ultrasonic meters are available from the manufacturers. Research information may also be available from university extension services such as the March 2008 *Using Ultrasonic Flowmeters in Irrigation Applications* from the University of Nebraska-Lincoln Extension, Institute of Agriculture and Natural Resources: http://www.ianrpubs.unl.edu/epublic/live/g1426/build/g1426.pdf

Figure 5-11: Ultrasonic flowmeter strapped to a PVC pipe

DRAFT

634.0502 Measurements in Open Channels

A. Measurements in open channel flow include depth, velocity, and discharge.

B. Depth Measurements

Depth measurements can be carried out by using a graduated rod or ruler, whether permanent or portable. The figure5-12 shows a permanent depth gage in an open channel.

Figure 5-12 Depth gage showing water surface elevation.

DRAFT

(2) In small laboratory flumes, point gages with an attached Vernier scale can be used to measure the water depth. When using a point gage in a flume, the Vernier scale is read when the point gage touches the flume bed, and then when the point gage touches the surface of the water. The difference between these two readings is the water depth. Figure 5-13 shows a point gage with a Vernier scale.

Figure 5-13: Point gage in laboratory flume with Vernier scale reading of *23.7*.

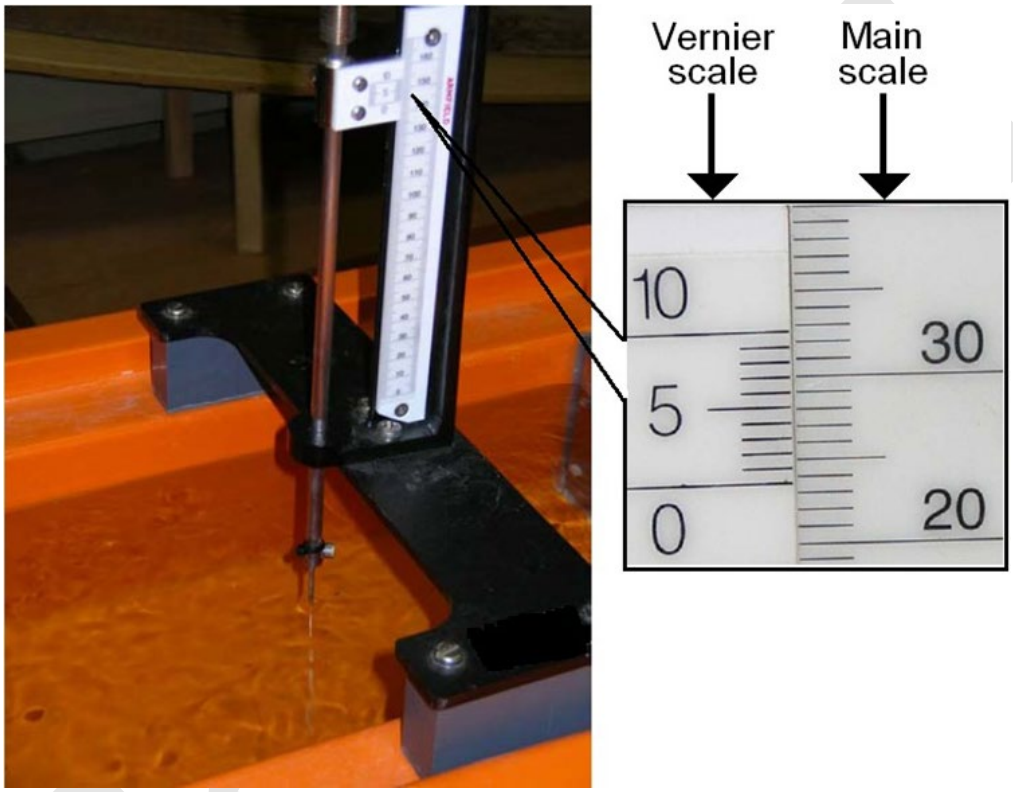

C. Velocity Measurements

Measurements of the water velocity in open channel flow can be performed through a variety of methods. Some of these methods are discussed in the following sections.

D. Propeller/Paddle Wheel Meters

A propeller or paddle wheel meter consists of a moving propeller or buckets whose rate of rotation can be recorded and related to the local flow velocity. Calibration information for these meters can be obtained from the manufacturer or from laboratory tests. Small propeller meters can be used in laboratory flumes to measure local velocities. Propeller meters used in larger streams typically have a streamlined body attached to the propeller to minimize effects on the flow.

E. Vortex Meter

Obstacles in a flow, such as a cylinder or a block, generate a train of vortices downstream of the obstacles. A vortex flow meter detects the vortex field produced by a given obstacle and relates it to the local velocity. Vortex flow meters are available from many manufacturers. Information on setting up and operating these meters can be obtained from the manufacturers.

F. Doppler (Acoustic) Meters

Doppler (or acoustic) meters use an acoustic signal released into the water at a point and picked up by a sensor a short distance downstream. The time required to pick up the signal is related to the local flow velocity. A variety of commercial Doppler meters exists. Details for the set up and operation of these meters are available from the manufacturers.

G. Velocity Measurements with Floaters

(1) A simple way to measure velocity in open channels consists of measuring the time, *t*, required by a floater to travel a certain distance, *x*, in the channel. A straight channel reach is needed to perform floater velocity measurements. Neutrally buoyant floaters are preferred because they are less impacted by wind. The flow velocity at the free surface is simply, *x/t*. Measurements in laboratory flumes indicate that the mean velocity is *0.85* times the free-surface velocity.

(2) Example 5-5 – Flow velocity calculation using the float method. While performing a floater velocity measurement in a straight reach of an irrigation canal it is found that the floater requires *56 sec* to travel *100 ft*. Estimate the surface velocity as well as the mean velocity in the canal.

(i) With x = 100 ft, and t = 56 sec, the surface velocity is $V_s = x/t = 100\text{ft}/56\text{ sec} = 1.78$ fps. The mean velocity is $V = 0.85V_s = 0.85\times1.78$ fps = 1.52 fps.

634.0503 Laser-Doppler and Particle-Velocity Measurements

A. These types of velocity measurements are suitable in the laboratory. In a Laser-Doppler velocimeter, two or three laser beams are focused at a point in the flow. Air bubbles or any other impurity in the water passing through the laser focus point will produce a Doppler shift which is detected by an optical sensor. Calibration of the laser Doppler velocimeter allows for the determination of the local velocity at the laser focus point.

B. In a Particle velocimeter, tracers introduced in the flow reflect light from a source and the location of the particles is optically traced allowing for the instantaneous description of flow fields.

634.0504 Sharp-crested Weirs

A. Sharp-crested weirs may be as simple as a thin plate placed across a rectangular open channel, as illustrated in Figure 5-14 below. Such a weir is referred to as a *suppressed weir*, as opposed to a *contracted weir* shown in Figure 5-15. The difference is that in a contracted weir the weir crest, length = *L*, does not extend the full width of the channel, *b*. Whereas in a suppressed weir *b* = *L*. In both cases of rectangular weirs *P* represents the weir height and *H* is the weir head. The head *H* is measured from the crest of the weir to the water surface at a point upstream so that the curvature of the flow streamlines is minimal (3 to 4 times the maximum value of H expected is suggested), as illustrated below.

Figure 5-14: Suppressed sharp-crested weir in a rectangular channel.

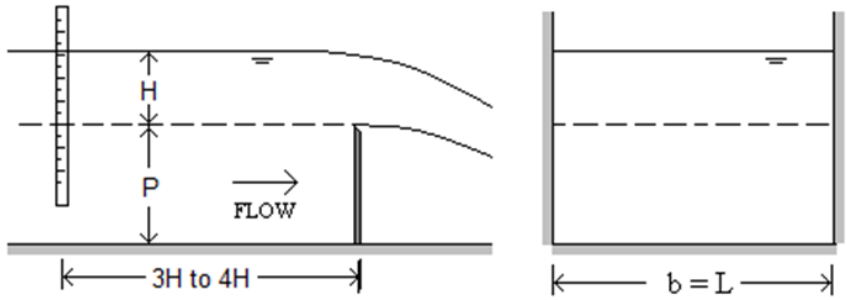

Figure 5-15: Contracted sharp-crested weir in a rectangular channel.

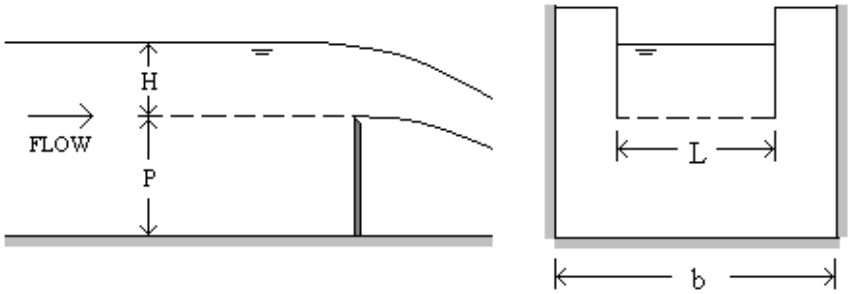

B. For the suppressed sharp-crested weir, the discharge Q over the weir is calculated using:

$$Q = C_d \frac{2}{3}\sqrt{2g}(L)(H)^{3/2} \qquad \text{(eq. 5-4)}$$

Where C_d is a discharge coefficient, g is the acceleration of gravity ($g = 9.806\ m/s^2 = 32.2\ ft/s^2$). The quantities L and H were defined previously. The value of C_d can be obtained using Rehbock's formulas:

$$C_d = 0.605 + \frac{1}{305H} + (0.08)\frac{H}{P}; \quad H(ft), P(ft) \qquad \text{(eq. 5-5)}$$

Or,

$$C_d = 0.605 + \frac{1}{1000H} + (0.08)\frac{H}{P}; \quad H(ft), P(ft) \qquad \text{(eq. 5-6)}$$

C. These equations are valid for P in the range of *0.33 ft* to *3.3 ft* (*0.10 m* to *1.0 m*) and for H in the range *0.08 ft* to *2.0 ft* (*0.025 m* to *0.60 m*), and the ratio $H/P < 1.0$. A photograph of a sharp-crested weir is shown in figure 5-16.

DRAFT

Figure 5-16: Contracted sharp-crested weir in a rectangular channel.

(1) Example 5-6 – Discharge over a suppressed rectangular weir. A suppressed rectangular weir is in a *3-ft* wide rectangular open channel. If the weir is *0.5 ft* high and the head measured upstream of the weir is $H = 0.4\ ft$, determine the discharge over the weir using Rehbock's formulas.

(2) For this case $L = b = 3\ ft$, $P = 0.5\ ft$, and $H = 0.4\ ft$, and $H/P = 0.4/0.5 = 0.8$. Rehbock's formula in units of the English System indicates that the discharge coefficient C_d is given by:

$$C_d = 0.605 + \frac{1}{305H} + (0.08)\frac{H}{P} = 0.605 + \frac{1}{(305)0.4} + (0.08)0.8$$

$$= 0.677$$

The discharge is calculated as:

$$Q = C_d \frac{2}{3}\sqrt{2g}(L)(H)^{3/2} = (0.677)\frac{2}{3}\sqrt{(2)(32.2\,{}^{ft}/_{s^2}}\,(3ft)(0.4)^{3/2}$$

$$= 2.75cfs$$

D. In equation 5-04, a *weir coefficient* C_w can be defined as $C_w = C_d \frac{2}{3}\sqrt{2g}$. And for H/P <0.4 the discharge coefficient is approximately $C_d = 0.62$; thus, the equation can be re-written as:

$$Q = 3.32 \cdot L \cdot H^{3/2}; \quad Q(cfs), L(ft), H(ft) \qquad \text{(eq. 5-7)}$$

or

$$Q = 1.83 \cdot L \cdot H^{3/2}; \quad Q(m^3/s), L(m), H(m) \qquad \text{(eq. 5-8)}$$

(1) Example 5-7 – Discharge over a suppressed rectangular weir. A suppressed rectangular weir is in a *4-ft* wide rectangular open channel. If the weir is *1.0 ft* high and the head measured upstream of the weir is $H = 0.25\ ft$, determine the discharge over the weir using the formula for $H/P<0.4$.

$$Q = 3.32 \cdot L \cdot H^{3/2} = 3.32 \times 4.0 \times (0.25)^{3/2} = 1.66cfs$$

DRAFT

E. For a contracted sharp-crested weir, the equation to calculate the discharge is the *Francis* formula:

$$Q = C_w(L - 0.1nH)H^{3/2} \qquad \text{(eq. 5-9)}$$

The value of *n* is either '1' or '2', depending on whether the contractions occur on one or two sides, as illustrated figure 5-17.

Figure 5-17: Contracted rectangular weir with *n = 1* or *n = 2* contractions.

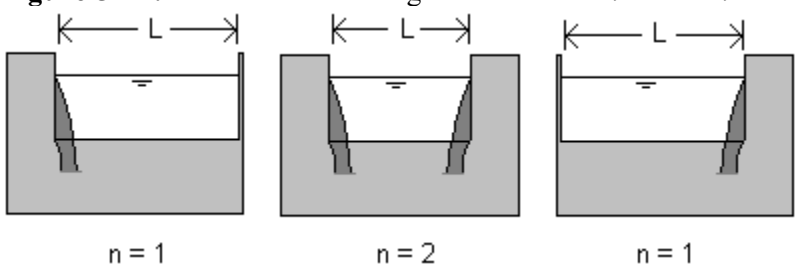

(1) Example 5-8 – Discharge over a contracted weir. A contracted weir of length *L = 2 ft* is set in a *3-ft* wide rectangular open channel. Using a weir coefficient $C_w = 3.32$, determine the discharge for a head *H = 0.20 ft* with (a) *n = 1* contraction, and (b) *n = 2* contractions. The weir height is *P = 0.5 ft*.

The ratio *H/P = 0.20ft/0.5ft = 0.4*, and the discharge is

$$n=1:\ Q = C_w(L - 0.1nH)H^{3/2} = 3.32\big(2 - (0.1)(1)(0.2)\big)(0.2)^{3/2}$$
$$= 0.588cfs$$

$$n=2:\ Q = C_w(L - 0.1nH)H^{3/2} = 3.32\big(2 - (0.1)(2)(0.2)\big)(0.2)^{3/2}$$
$$= 0.582\ cfs$$

DRAFT

(2) Figure 5-18 below shows a contracted rectangular weir in a laboratory flume.

Figure 5-18: Contracted weir in a laboratory flume.

(3) Shown in figure 5-19 a special type of a contracted weir is the *Cipoletti weir* consisting of a trapezoidal shape with side slopes 1H: 4V as shown figure 5-20.

Figure 5-19 Flow over a Cipoletti weir in Grand Junction, CO

DRAFT

Figure 5-20: Cipoletti weir schematic.

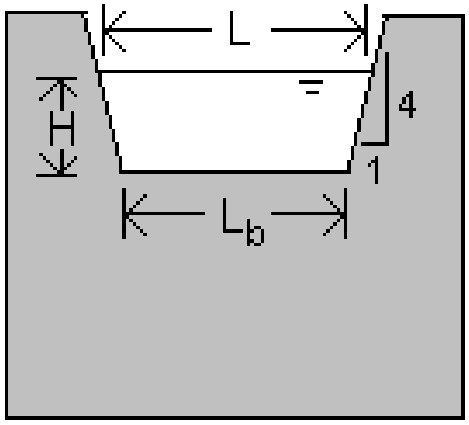

(i) The equation for the discharge over a Cipoletti weir is given by:

$$Q = 3.367 \cdot L \cdot H^{3/2}; \quad Q(cfs), L(ft), H(ft) \qquad \text{(eq. 5-10)}$$

Where $L = L_b + H/2$, and L_b is the bottom or crest length of the Cipoletti weir.

(ii) Example 5-8 – Discharge over a Cipoletti weir. Determine the discharge over a Cipoletti weir if the weir length is $L = 1.5\ ft$, and the head is $H = 0.5\ ft$.

(iii) The discharge is

$$Q = 3.367 \cdot L \cdot H^{3/2} = 3.367 \times 1.5 \times 0.5^{3/2} = 1.79 cfs.$$

(4) A triangular, or v-notch weir consists of a symmetric v-shaped notch in a thin wall placed across an open channel. A v-notch weir is used to measure low flows of less than 10 cfs. A schematic of a triangular (or v-notch) weir is shown figure 5-21.

Figure 5-21: Schematic of a triangular or v-notch weir.

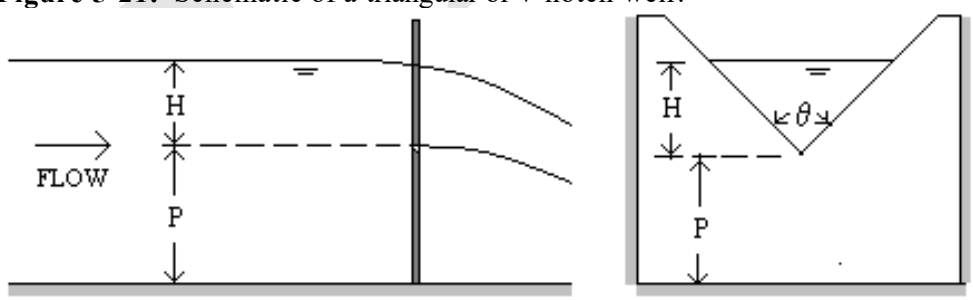

DRAFT

(i) Figure 5-22 shows a small triangular weir in a laboratory flume.

Figure 5-22: V-notch, or triangular, weir in a laboratory flume.

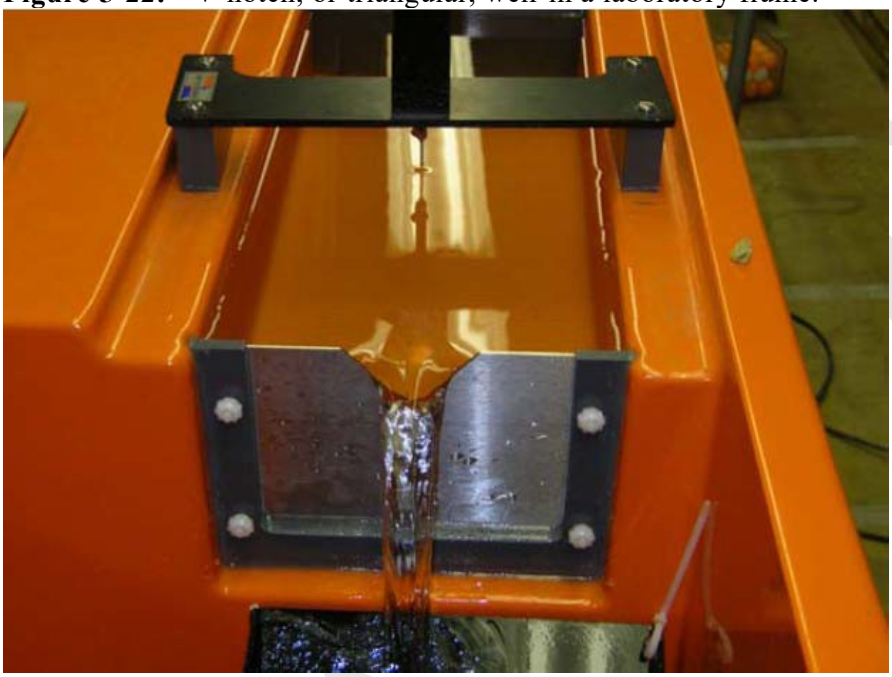

(ii) The discharge for a triangular (or v-notch) weir is given by:

$$Q = C_d \frac{8}{15}\sqrt{2g}\ \left(tan\left(\frac{\theta}{2}\right)\right) H^{5/2} \qquad \text{(eq. 5-11)}$$

Where C_d is a discharge coefficient, g is the acceleration of gravity ($g = 9.806\ m/s^2 = 32.2\ ft/s^2$), and θ is the angle of the v-notch. A typical value of the contraction coefficient is $C_d = 0.58$.

(iii) Example 5-10 – Discharge over a triangular weir. Determine the discharge over a v-notch weir if the weir angle is $\theta = 80^o$ and the head is $H = 0.55\ ft$. Use a discharge coefficient $C_d = 0.58$.

(iv) The Discharge is

$$Q = C_d \frac{8}{15}\sqrt{2g}\ \left(tan\left(\frac{\theta}{2}\right)\right) H^{5/2} = 0.58\left(\frac{8}{15}\right)\sqrt{2(32.2ft/s^2)}\ tan\left(\frac{80^o}{2}\right)(0.55)^{5/2}$$

$$= 0.467\ cfs$$

DRAFT

634.0505 Broad-crested Weirs

A. A broad-crested weir consists of an obstacle of height *P* placed in a rectangular open channel, as illustrated in figure 5-23. The flow over the broad crested weir becomes critical, so that the depth at that point is the critical depth y_c.

Figure 5-23: Schematic of flow over a broad-crested weir.

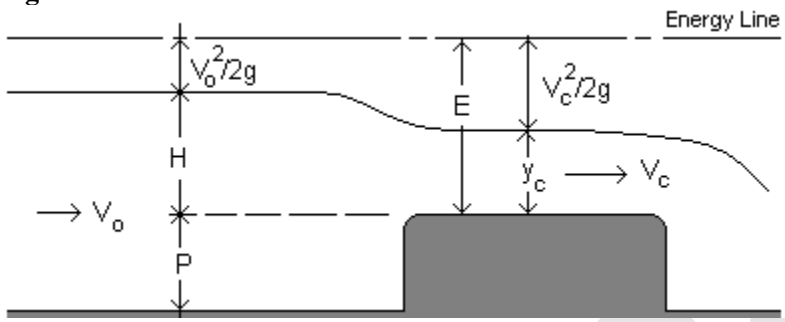

B. In a rectangular channel of width *L*, the discharge over the broad-crested weir is:

$$Q = L\sqrt{gy_c^3} \qquad \text{(eq. 5-12)}$$

C. If *E* represents the specific energy available over the weir, the critical depth can be expressed as, $y_c = \frac{2}{3}E$ and the discharge is written as:

$$Q = L\sqrt{g}\left(y_c^{3/2}\right) = L\sqrt{g}\left(\frac{2}{3}\right)^{3/2} E^{3/2} \qquad \text{(eq. 5-13)}$$

D. Expressing this equation in the form of a suppressed weir equation (equation 5-04), the discharge coefficient is given by:

$$C_d = \frac{1}{\sqrt{3}}\left(\frac{E}{H}\right)^{3/2} \qquad \text{(eq. 5-14)}$$

Where *H* is the head measured upstream of the broad-crested weir, where the flow depth is $y = P+H$ and the flow velocity is V_o. For a large value of *H*, V_o is small, and *E* becomes like *H*, i.e., *E/H* becomes *1.0* which provides a minimum value for the discharge coefficient, $(C_d)_{min} = \frac{1}{\sqrt{3}} = 0.577$. As the velocity V_o increases, the value of *E/H* becomes larger than *1*, and the discharge coefficient (equation 5-14) becomes larger than *0.577*.

E. If the critical depth can be measured over the weir, equation 5-12 provides the discharge. If the head *H* is measured use equation 5-04, instead, with a discharge coefficient larger than or equal to *0.577*. These are the equations used to evaluate many of the long- throated flume types discussed in section 634.0507.

F. Example 5-11– Discharge over a broad-crested weir- critical depth measured.

(1) Determine the discharge over a broad-crested weir if the critical depth of flow over the weir is measured to be $y_c = 0.52\,ft$. The channel has a width $L = 2.5\,ft$.

(2) The discharge is:

$$Q = L\sqrt{gy_c^3} = 2.5ft\sqrt{(32.2\,{}^{ft}/_{s^2}\,(0.52ft)^3} = 5.32cfs$$

G. Example 5-12 – Discharge over a broad-crested weir – head measured.

(1) Determine the discharge over a broad-crested weir if the head measured upstream of the weir is measured to be $H = 0.65\ ft$. The channel has a width $L = 3.5\ ft$. Use a discharge coefficient $C_d = 0.61$.

(2) The discharge is (equation 5-04):

$$Q = C_d\left(\frac{2}{3}\right)\sqrt{2g}(L)(H)^{3/2} = 0.61\left(\frac{2}{3}\right)\sqrt{(2)\left(32.2\,{}^{ft}/_{s^2}\right)}(3.5ft)(0.65)^2$$

$$= 5.99cfs$$

G. Most hydraulic structures in natural resource conservation work incorporate broad-crested weirs, where their function is the control of flood flows. The crest is horizontal and long in the direction of flow so that the water lays on the crest rather than springing free as water does flowing over a sharp-crested weir. Roadways over bridges and culverts may be considered broad-crested weirs to estimate overtopping flows. These discharges are generally calculated with equation 5-04, where a weir coefficient, C_w, can be defined as $C_w = C_d\frac{2}{3}\sqrt{2g}$. C_w ranges in value from 2.5 to 3.1.

634.0506 Submerged Weir Flow

A. Conditions downstream of a sharp-crested weir may produce submergence of the weir as illustrated in figure 5-24. The equation used to calculate the discharge is the same as equation 5-07, modified by a submergence coefficient C_s, and replacing H with the upstream head H_u. The resulting equation is:

$$Q = 3.32C_sLH_u^{3/2} \qquad \text{(eq. 5-15)}$$

Figure 5-24 Submerged weir flow.

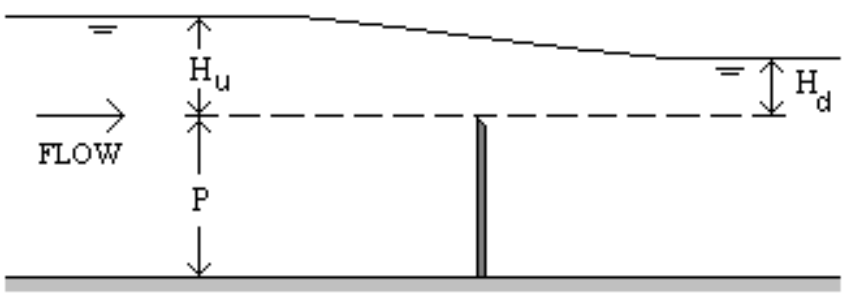

B. The submergence coefficient is based on empirical data, as shown in Figure 5-25. A polynomial fitting of this empirical data gives the following equation for the coefficient of submergence as:

$$C_s = -28.152\left(\frac{H_d}{H_u}\right)^4 + 62.59\left(\frac{H_d}{H_u}\right)^3 - 51.395\left(\frac{H_d}{H_u}\right)^2 + 18.165\left(\frac{H_d}{H_u}\right) - 1.3319 \qquad \text{(eq. 5-16)}$$

For $0.38 < H_d/H_u < 1.0$, or $Cs = 1.0$, for $H_d/H_u < 0.38$.

Figure 5-25 Coefficient of submergence for sharp crested weirs.

C. Example 5-13 - Discharge over a submerged sharp-crested weir

(1) A sharp crested weir is operating under submerged conditions with upstream and downstream heads of $H_u = 0.40\ ft$ and $H_d = 0.25\ ft$. If the weir has a length $L = 3.5\ ft$, determine the discharge Q over the weir.

(2) The submergence ratio $H_d/H_u = 0.25\ ft/0.40\ ft = 0.625$, and the submergence coefficient is calculated as:

$$C_s = -28.152\left(\frac{H_d}{H_u}\right)^4 + 62.59\left(\frac{H_d}{H_u}\right)^3 - 51.395\left(\frac{H_d}{H_u}\right)^2 + 18.165\left(\frac{H_d}{H_u}\right) - 1.3319$$

$$C_s = -28.152(0.625)^4 + 62.59(0.625)^3 - 51.395(0.625)^2 + 18.165(0.625) - 1.3319$$

$$= 0.93$$

(3) With this coefficient, the discharge is calculated as:

$$Q = 3.32(C_s)L(H_u)^{3/2} = 3.32(0.93)3.5(0.40)^{3/2} = 2.73cfs$$

D. Submergence affects broad-crested weirs less than sharp-crested weirs. For broad-crested weirs, discharge begins to be reduced at 80% submergence; at 90% submergence, discharge is still greater than 90% of unsubmerged discharge, USACOE (2008).

DRAFT

634.0507 Flumes

A. Flumes are shaped, open channel flow sections that force flow to accelerate and pass through critical depth in the flume. When flow passes through critical depth, a unique water surface profile occurs within the flume for each discharge. Flow acceleration is produced by converging the sidewalls, raising the bottom, or a combination of both. Flumes range in size from *1- inch* to over *50 ft* wide, and are installed in ditches, laterals, and large canals to measure flow.

(1) Long-throated Flumes (fig5-26)

Long-throated flumes are coming into general use because they can be easily fitted into channel shapes. When the flume's bottom is a raised overflow crest, with no side contractions, the flume is commonly called a broad-crested weir. Characteristics of long- throated flumes include:

- Can have nearly any desired cross-sectional shape,
- Can be made into portable devices,
- Have few problems with floating debris and sediment,
- May be designed and calibrated by computer techniques; WinFlume design software can be downloaded at:
- https://www.usbr.gov/tsc/techreferences/computer%20software/software/winflume/index.html
- And, generally have measurement errors less than ±2%.

Figure 5-26: Long throated Flume Hollister, ID

DRAFT

(2) Parshall Flumes

(i) Parshall flumes are used to measure water flow by custom or by law in some locales fig (5-27).

(ii) The Parshall flume is an open-channel measurement structure that combines a contraction of the channel width with a drop in the channel bed. Both transitions contribute to the establishment of critical flow, thus providing a unique relationship between the flow depth and discharge through the flume. Parshall flumes are calibrated empirically, using other more precise and accurate water-measuring systems. Since the flumes are calibrated empirically, care must be taken to build Parshall flumes according to the design dimensions. If h_a represents the water depth at the Parshall flume's throat in *ft*, the discharge through the flume Q in *cfs*, can be calculated using the equation 5-17:

$$Q = Ch_a^n \qquad \text{(eq. 5-17)}$$

Where the coefficient C and the exponent n are given as functions of the flume's width. Coefficients and exponents are given in tables found in the *Water Measurement Manual*.

Figure 5-27 Parshall flume Ft. Collins, CO

(iii) Example 5-14 – Discharge through a Parshall flume. For a flume of width *5 ft*, and depth, $h_a = 1.2\ ft$, determine the discharge through the flume.

- From the *Water Measurement Manual, C = 20* and *n = 1.59*. The resulting discharge is:

$$Q = C\,h_a^{\,n} = 20 \times 1.2^{1.5} = 26.73\ cfs$$

- Other flumes have been designed for special uses, such as for measurement of flows containing large amounts of sediment. See the *Water Measurement Manual* for discussion of special-type flumes.

DRAFT

634.0508 References

A. American Society of Civil Engineering (ASCE). 2006. Sedimentation Engineering. Manuals and Reports of Engineering Practice, No. 54 Vito A. Vanoni, ed, ISBN# 0784408238. Reston, VA.

B. Barnes, H.H. 1967. Roughness characteristics of natural channels. U.S. Geological Survey Water Supply Paper 1849. U.S. Government Printing Office. Washington, DC.

C. Brater E.F., and H.W. King. 1996. Handbook of hydraulics (seventh edition). McGraw-Hill. New York, NY.

D. Chaudhry, M. H. 1993. Open-channel flow. Prentice-Hall.

E. Chow, V.T. 1959. Open-channel hydraulics. McGraw-Hill. New York, NY.

F. Cowan, W. L. 1956. Estimating Hydraulic Roughness Coefficients. Agricultural Engineering , 37(7).

G. Fasken, G. 1963. Guide for selecting roughness coefficients "n" values for channels. USDA, Soil Conservation Service.

H. Federal Highway Administration. 2001. Hydraulic design of highway culverts, hydraulic design series No. 5. (FHWA-NHI-01-020).

I. Finnemore, E.J., and J.B. Franzini. 2002. Fluid mechanics with engineering applications. McGraw-Hill. New york, NY.

J. French, R. H. 1985. Open-channel hydraulics. McGraw-Hill. New York, NY.

K. Idelchik, I.E. 1999. Handbook of hydraulic resistance (third edition). Begell House. New York, NY.

L. Kobus, H. 1980. Hydraulic modeling, bulletin 7 – German Association for Water Resources and Land Improvements (issued in cooperation with the International Association for Hydraulic Research). Hamburg: Verlag Paul Prey.

M. Lamont, P.A. 1981. Common Pipe Flow Formulas Compared with the Theory of Roughness. Journal of the American Water Works Association, 73(5), 274.

N. Mays, L. W. 1999. Hydraulic design handbook. McGraw-Hill. New York, NY.

O. Munson, B. D. 1998. Fundamentals of fluid mechanics (third edition). John Wiley and Sons.

P. Raudkivi, A. J. 1976. Loose boundary hydraulics. Pergamon Press. Oxford, United Kingdom.

Q. Roberson, J.A., E.R. Tinney, and E.A. Sibley. 1956. Studies in breakage problems in concrete irrigation pipe, Bull. 225, Washington State Institute of Technology (Washinton State University).

R. Streeter, V. L., and E.B. Wylie. 1998. Fluid mechanics (ninth edition). McGraw-Hill. New York, NY.

S. USA Corps of Engineers (COE). 2008. HEC-RAS river analysis system hydraulic reference manual 4.0. Hydrologic Engineering Center. Davis, CA.

T. Temple, D.M., K.M. Robinson, R.M. Ahring, and A.G. Davis. 1987. Stability design of grass-lined open channels, Agricultural handbook 667. USDA, Agricultural Research Service. Washington, DC.

DRAFT

U. Tullis, J.P. 1989. Hydraulics of pipelines – pumps, valves, cavitation, transients. John Wiley and Sons. New York, NY.

V. USDA, NRCS. 2005. Structural design of flexible conduits. NEH 636, Chap. 52. Washington, DC.

W. USBR/USDA-NRCS/USDA-ARS. 2001. Water measurement manual (revised printing). https://www.usbr.gov/tsc/techreferences/mands/wmm/index.htm

X. USDA, NRCS. 2008. Stream restoration design handbook. NEH 654. Washington, DC.

DRAFT