United States Department of Agriculture

Natural Resources Conservation Service

# Part 630 Hydrology National Engineering Handbook

# Chapter 5 Streamflow Data

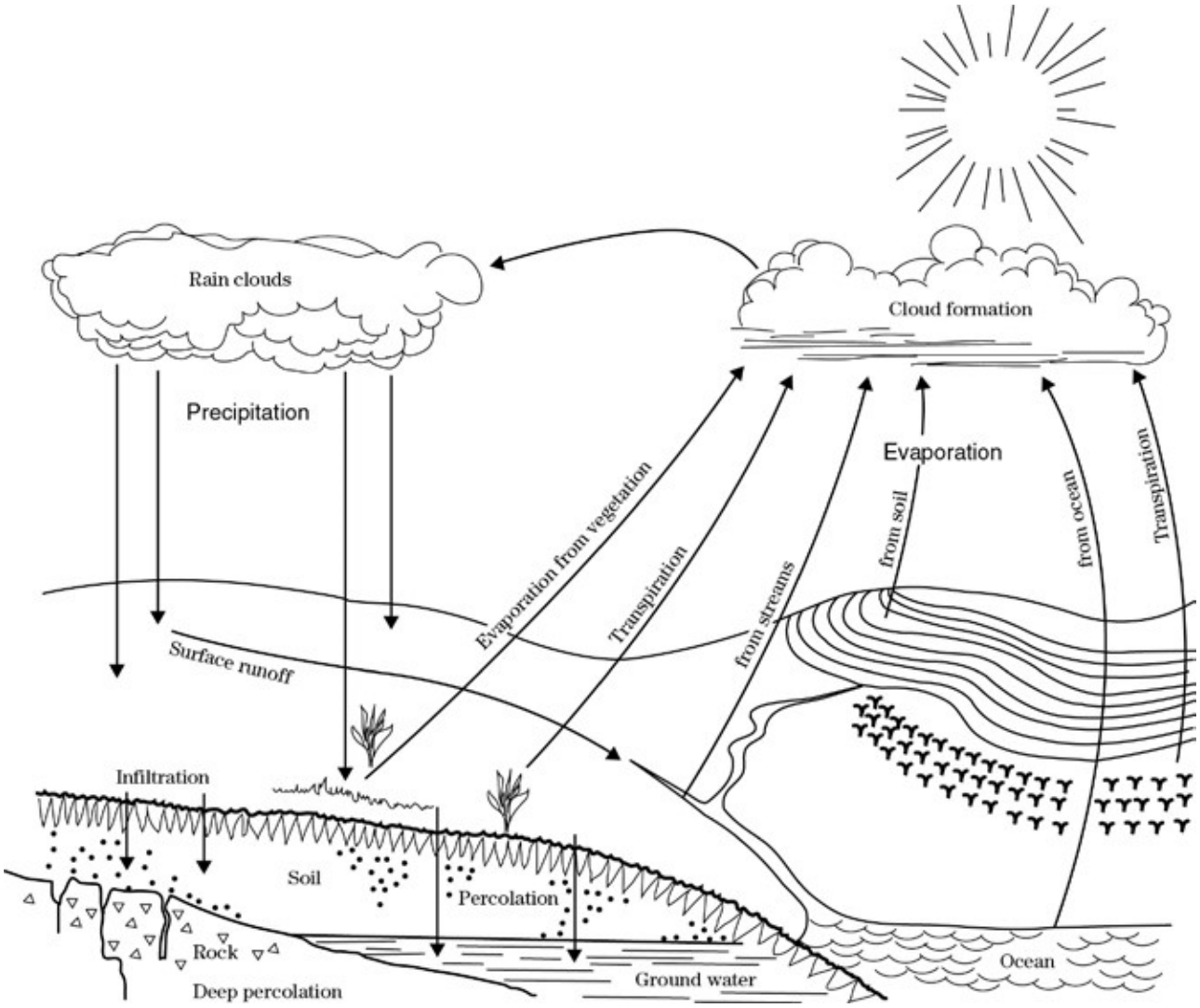

Issued March 2020

In accordance with Federal civil rights law and U.S. Department of Agriculture (USDA) civil rights regulations and policies, the USDA, its Agencies, offices, and employees, and institutions participating in or administering USDA programs are prohibited from discriminating based on race, color, national origin, religion, sex, gender identity (including gender expression), sexual orientation, disability, age, marital status, family/parental status, income derived from a public assistance program, political beliefs, or reprisal or retaliation for prior civil rights activity, in any program or activity conducted or funded by USDA (not all bases apply to all programs). Remedies and complaint filing deadlines vary by program or incident.

Persons with disabilities who require alternative means of communication for program information (e.g., Braille, large print, audiotape, American Sign Language, etc.) should contact the responsible Agency or USDA's TARGET Center at (202) 720-2600 (voice and TTY) or contact USDA through the Federal Relay Service at (800) 877-8339. Additionally, program information may be made available in languages other than English.

To file a program discrimination complaint, complete the USDA Program Discrimination Complaint Form, AD-3027, found online at How to File a Program Discrimination Complaint and at any USDA office or write a letter addressed to USDA and provide in the letter all of the information requested in the form. To request a copy of the complaint form, call (866) 632-9992. Submit your completed form or letter to USDA by: (1) mail: U.S. Department of Agriculture, Office of the Assistant Secretary for Civil Rights, 1400 Independence Avenue, SW, Washington, D.C. 20250-9410; (2) fax: (202) 690-7442; or (3) email: program.intake@usda.gov.

USDA is an equal opportunity provider, employer, and lender.

# Table of Contents

630.0500 General ..... 1
630.0501 Streamflow Data Types and Sources ..... 2
630.0502 Streamflow Data Collection ..... 5
630.0503 Uses of Streamflow Data ..... 6
630.0504 Considerations for Use of Streamflow Data ..... 13
630.0505 References ..... 15

# Table of Figures

Figure 5-1. Example of USGS peak flow data from a gage site (*http://waterdata.usgs.gov/tx/nwis/rt)* ..... 3
Figure 5-2. Sample of USGS surface water-supply paper summarizing discharge records (USGS 1964).... 4
Figure 5-3. Crest staff gage (USGS 1969)..... 5
Figure 5-4. Mean daily discharges, annual flood period (excerpt from fig. 5–2) ..... 7
Figure 5-5. Factors affecting the correlation of data: A guide to the transposition of streamflow ..... 8
Figure 5-6. Solution for runoff equation..... 10
Figure 5-7. Curve numbers for events with annual peak discharge for Watershed 2 near Treynor, IA ..... 12
Figure 5-8. Rainfall versus direct runoff plotted from an experimental ARS watershed in Treynor, IA .... 13

# Part 630 – Hydrology

## Chapter 5 – Streamflow Data

### 630.0500 General

A. Introduction

(1) Streamflow data collected by various agencies describe the flow characteristics of a stream at a given point. Normally, data are collected by using a measuring device commonly called a stream gage.

(2) Streamflow data are used to indicate the present hydrologic conditions and the discharge amounts of a watershed and to check methods for estimating present and future conditions. Specific uses of streamflow data, presented in 210–NEH, Part 630, Chapter 9, are for determining hydrologic soil-cover complex numbers, frequency analysis (chapter 18), determining water yields (chapter 20), and designing floodwater retarding structures (chapter 21).

(3) This chapter describes ways to use streamflow data to determine runoff from a specific event, how to use this information with rainfall data to estimate the watershed runoff curve number, and how to use the data to determine volume duration-probability relationships.

B. Acknowledgments

(1) **Victor Mockus** (deceased) originally prepared Chapter 5, Streamflow Data" in 1964 as chapter 5 of the Soil Conservation Service (SCS) National Engineering Handbook, Section 4 (NEH–4). This chapter was reprinted with minor revisions in 1969.

(2) In 1997, an Agricultural Research Service (ARS)–Natural Resources Conservation Service (NRCS) workgroup, under the guidance of **Norman Miller** (retired), updated the chapter and NRCS released it as 210–NEH, Part 630, Chapter 5 in 1997.

(3) **Jon Fripp**, stream mechanics civil engineer, Fort Worth, TX, under the guidance of **Claudia C. Hoeft**, national hydraulic engineer, lead a team that reviewed and prepared a November 2015 update to chapter 5. Team members who provided source information and expert reviews were **Karl Visser**, hydraulic engineer, and **Phuc Vu**, design civil engineer, all of NRCS, Fort Worth, TX; and **Richard Weber** (retired).

(4) The following individuals provided additional reviews and comments:
(i) **Bill Merkel**, (retired)
(ii) **Helen Fox Moody**, (deceased)
(iii) **Quan D. Quan**, hydraulic engineer, NRCS, Beltsville, MD
(iv) **Thomas Bourdon** (retired)
(v) **Terry Costner**, (retired)
(vi) **Scott Gong**, design engineer, NRCS, Jackson, MS
(vii) **Annette Humpal**, (retired)
(viii) **Arlis Plummer**, (retired)
(ix) **Jim Stafford**, (retired)
(x) **Nathaniel Todea**, hydraulic engineer, NRCS, Salt Lake City, UT
(xi) **Ed Radatz**, (retired)
(xii) **Tim Ridley**, hydraulic engineer, NRCS, Morgantown, WV
(xiii) **Chris Ritz**, hydraulic engineer, NRCS, Indianapolis, IN
(xiv) **Barry Rankin** (retired)
(xv) **Ben Smith**, hydrologist, NRCS, Tolland, CT

(5) The Technical Publications Work Group, **Lynn Owens** (retired); **Wendy Pierce**, illustrator; and **Suzi Self** (retired), all of NRCS, Fort Worth, TX, prepared the document for publication.
(6) This revision represents a reformatting of the November 2015 version, with only minor revisions.

## 630.0501 Streamflow Data Types and Sources

A. Published streamflow data for the United States are available from many sources. A variety of local, State, and Federal agencies operate and maintain stream gages.

B. The main sources are:

(1) **U.S. Geological Survey (USGS)—Department of Interior**
(i) USGS is the major source of streamflow data for the United States. Water supply papers (WSP) and other publications issued regularly contain records collected from continuously operated gages at streamflow stations and other crest-stage and low flow data. There are thousands of active and inactive stream gaging stations operated by the USGS across the country.
(ii) A variety of statistical data are also available from USGS on the following Web site: http://waterdata.usgs.gov/nwis/sw. Information includes mean daily data, peak-discharge data, and current conditions. Data are available and downloadable in tabular or graphical formats. Figure 5–1 is an example of peak flow data in a graphical format.
(iii) Historical data are generally available in digital format. However, hard copies are still available in some offices. Figure 5–2 shows a page from an older WSP containing summaries of all records for 1951 through 1960. Such older summaries covering long periods typically do not include daily flow records.
(2) **U.S. Bureau of Reclamation (BOR)—Department of Interior—**The Bureau of Reclamation gages and publishes streamflow data at irregular intervals in technical journals and professional papers.
(3) **U.S. Forest Service (FS)—Department of Agriculture—**Streamflow data are published at irregular intervals in technical bulletins and professional papers.
(4) **Agricultural Research Service (ARS)—Department of Agriculture—**ARS publishes and maintains compilations of small watershed data. ARS maintains an online database consisting of precipitation and streamflow data from its small experimental agricultural watersheds in the United States. More information on the ARS water database and the data are accessible through https://data.nal.usda.gov/dataset/ars-water-database.
(5) **U.S. Army Corps of Engineers (USACE)—Department of Defense—**The USACE obtains gage data and publishes streamflow data at irregular intervals in technical journals and professional papers.
(6) **Natural Resources Conservation Service (NRCS)—Department of Agriculture**—NRCS gages and publishes streamflow data at irregular intervals in technical journals and professional papers. NRCS and the National Oceanographic and Atmospheric Administration's National Weather Service (NWS) jointly analyze snow and precipitation data in the Snow Survey Program. The data are used to forecast seasonal runoff in the western United States, which depends on snowmelt for about 75 percent of its water supply. The NRCS National Water and Climate Center (NWCC) in Portland, Oregon, archives snow course, precipitation, streamflow, reservoir, and temperature data for states. The data, which includes many USGS gage

sites, is accessible online through the NWCC web-site at: http://www.nrcs.usda.gov/wps/portal/nrcs/main/national/nwcc/.

**Figure 5-1.** Example of USGS peak flow data from a gage site (***http://waterdata.usgs.gov/tx/nwis/rt)***

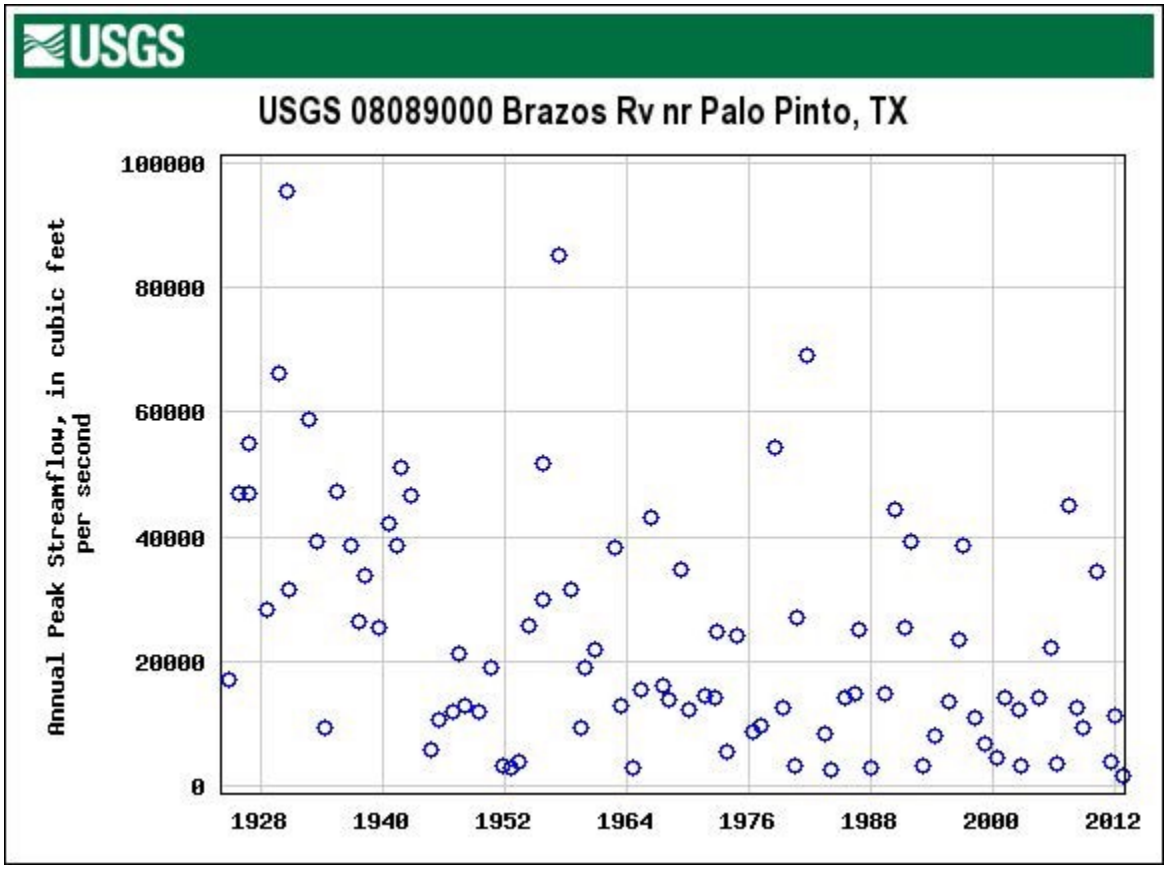

**Figure 5-2.** Sample of USGS surface water-supply paper summarizing discharge records (USGS 1964)

Nueces River Basin—2080 Atascosa River at Witsett, TX

Location—Lat. 28°37'20" long. 98°17"05", on right bank 1,400 feet upstream from bridge on Farm Road 99, 0.9 mile west of Whitsett, Live Oak County, and 4 miles downstream from LaParita Creek. Drainage area—1,171 mi2.

Records available—September 1924 to May 1926, May 1932 to September 1960.

Gage—Water-stage recorder and artificial control. Datum of gage is 159.04 feet above mean sea level, datum of 1929. Prior to May 8, 1926, chain gage at bridge 1,600 feet downstream at datu 1.38 feet higher.

Average discharge—29 years (1924-25, 1932-60), 135 ft3/s (97,740 acre-foot per year).

Extremes—1924-26, 1932-60: Maximum discharge, 39,300 ft3/s July 7, 1942 (gage height, 38.3 feet from floodmark), from rating curve extended above 12,000 ft3/s on basis of slope-area measurement at gage height 38.0 feet; no flow at times. Maximum stage since at least 1881, about 41 feet in September 1919.

Remarks—Considerable losses of floodflows into various permeable formations occur upstream from station. June 1951 to May 1958 a considerable part of low flow resulted from flow of several artesian wells near Campbellton, which were drilled by the Lower Nueces River Water Supply District and turned into river to supplement the supply for city of Corpus Christi. Small diversions above station.

**Monthly and yearly mean discharge, in cubic feet per second**

| Water year | Oct | Nov | Dec | Jan | Feb | Mar | Apr | May | Jun | Jul | Aug | Sep | The year |
|---|---|---|---|---|---|---|---|---|---|---|---|---|---|
| 1951 | 0.47 | 0.58 | 2.70 | 4.88 | 6.39 | 10.0 | 6.98 | 188 | 239 | 1.60 | 6.49 | 445 | 75.5 |
| 1952 | 20.0 | 20.7 | 13.9 | 17.5 | 48.5 | 14.9 | 65.4 | 39.2 | 6.76 | 114 | 6.74 | 246 | 50.7 |
| 1953 | 7.58 | 16.4 | 24.6 | 22.5 | 17.2 | 17.4 | 59.4 | 542 | 30.3 | 32.1 | 50.4 | 591 | 118 |
| 1954 | 76.3 | 13.9 | 10.0 | 9.97 | 15.6 | 15.2 | 62.3 | 43.8 | 39.8 | 7.59 | 0 | 3.29 | 24.8 |
| 1955 | 21.6 | 27.2 | 9.27 | 19.2 | 128 | 16.2 | 12.2 | 130 | 60.6 | 19.2 | 39.4 | 19.5 | 41.3 |
| 1956 | 378 | 5.21 | 11.7 | 11.6 | 11.3 | 10.6 | 31.9 | 62.8 | 21.6 | 14.5 | 68.0 | 177 | 35.5 |
| 1957 | 204 | 6.86 | 58.7 | 14.6 | 18.6 | 108 | 1,208 | 1,365 | 321 | 13.7 | 8.91 | 703 | 336 |
| 1958 | 10 | 241 | 23.4 | 940 | 1,499 | 64.7 | 30.7 | 208 | 23.8 | 4,734 | 3.09 | 118 | 267 |
| 1959 | 386 | 2,863 | 87.8 | 28.8 | 37.2 | 19.7 | 17.1 | 83.5 | 24.0 | 8.55 | 2.77 | 7.29 | 82.8 |
| 1960 | 200 | 31.2 | 1,109 | 16.7 | 17.2 | 31.5 | 22.1 | 10.1 | 201 | 142 | 135 | 14.2 | 69.7 |

**Monthly and yearly discharge, in acre-feet**

| | | | | | | | | | | | | | |
|---|---|---|---|---|---|---|---|---|---|---|---|---|---|
| 1951 | 29 | 35 | 166 | 300 | 355 | 615 | 416 | 11,550 | 14,210 | 98 | 399 | 26,460 | 54,630 |
| 1952 | 1,230 | 1,230 | 852 | 1,080 | 2,790 | 915 | 3,890 | 2,140 | 402 | 7,000 | 415 | 14,610 | 36,820 |
| 1953 | 466 | 974 | 1,510 | 1,381 | 956 | 4,071 | 3,540 | 33,350 | 1,800 | 1,970 | 3,100 | 35,170 | 85,290 |
| 1954 | 4,690 | 828 | 617 | 613 | 865 | 936 | 3,710 | 2,700 | 2,370 | 467 | 0 | 196 | 17,990 |
| 1955 | 1,330 | 1,620 | 570 | 1,180 | 4,080 | 996 | 725 | 8,000 | 3,610 | 1,180 | 2,420 | 1,160 | 29,870 |
| 1956 | 48 | 310 | 721 | 716 | 649 | 652 | 1,900 | 3,860 | 1,290 | 889 | 4,180 | 10,530 | 25,740 |
| 1957 | 12,560 | 408 | 3,610 | 900 | 1,040 | 6,610 | 71,870 | 83,900 | 19,080 | 845 | 548 | 41,830 | 243,200 |
| 1958 | 6,170 | 14,330 | 1,440 | 57,800 | 83,230 | 3,980 | 1,830 | 12,770 | 1,410 | 2,920 | 190 | 7,010 | 193,100 |
| 1959 | 23,750 | 17,040 | 5,400 | 1,770 | 2,060 | 1,210 | 1,020 | 5,130 | 1,430 | 526 | 171 | 434 | 59,940 |
| 1960 | 12,300 | 1,860 | 732 | 1,030 | 990 | 1,940 | 1,620 | 619 | 11,970 | 5,710 | 8,330 | 844 | 50,640 |

**Yearly discharge, in cubic feet per second**

| Year WSP | Water year ending September 30 | | | | | Calendar year | | |
|---|---|---|---|---|---|---|---|---|
| | Momentary maximum | | | Minimum | Mean | Acre-feet | Mean | Acre-feet |
| | | Discharge | Date | day | | | | |
| 1950 | — | — | — | — | — | — | 40.1 | 29,040 |
| 1951 | 1212 | 6,060 | Sep 14, 1951 | 0.2 | 75.5 | 54,630 | 79.7 | 57,720 |
| 1952 | 1242 | 4,000 | Sep 10, 1952 | .6 | 50.7 | 36,820 | 50.2 | 36,460 |
| 1953 | 1282 | 6,550 | Sep 5, 1953 | 2.6 | 118 | 85,290 | 122 | 88.470 |
| 1954 | 1342 | 1,050 | Apr 9, 1954 | 0 | 24.8 | 17,990 | 21.2 | 15,380 |
| 1955 | 1392 | 1,570 | Feb 7 1955 | .7 | 41.3 | 29,870 | 37.9 | 27,430 |
| 1956 | 1442 | 2,960 | Sep 3, 1956 | 0 | 35.5 | 25,740 | 56.8 | 41,240 |
| 1957 | 1512 | 8,410 | May 29, 1957 | 1.6 | 336 | 243,200 | 343 | 248,600 |
| 1958 | 1562 | 17,500 | Feb 23, 1958 | 1.3 | 267 | 193,100 | 300 | 217,300 |
| 1959 | 1632 | 3,830 | Oct 31, 1958 | 1.0 | 82.8 | 59,940 | 39.6 | 28,640 |
| 1960 | 1712 | 3,210 | Jun 27, 1960 | .7 | 69.7 | 50,640 | — | — |

## 630.0502 Streamflow Data Collection

A. **Permanent Streamflow Gage Installations**

(1) Most reported streamflow measurements are from locations maintained over time. These are set at fairly stable areas where a consistent rating curve relating gage height stream discharge can be obtained. This rating curve has to be checked periodically and after major events to assure that it has not changed. Users can examine historic changes in the rating curve to assess channel behavior and stability over time.

(2) Stream gage locations can be placed at manmade controls such as bridges, crossings, and dams or at natural controls, such as rock canyons or otherwise stable reaches. Stream height is measured and the rating curve is used to calculate the discharge. The data can be recorded from field observations or electronically.

B. **Temporary Streamflow Station Installations** - Sometimes streamflow information is needed for a brief period on a small stream, irrigation ditch, recorder. If the flow to be measured is small, measuring devices described in 210–NEH, Part 623, Chapter 9, Water Measurement, may be used. If only the maximum stage or peak rate of flow is needed, a crest staff gage can be used at a culvert or other existing structure. Figure 5–3 shows a typical inexpensive staff gage. The pipe of the gage contains a loose material (usually powdered cork) that floats and leaves a high-water mark or maximum stage. The stage is used with a rating curve (210–NEH Part 630, Chapter 14) to estimate the peak rate of flow.

**Figure 5-3.** Crest staff gage (USGS 1969)

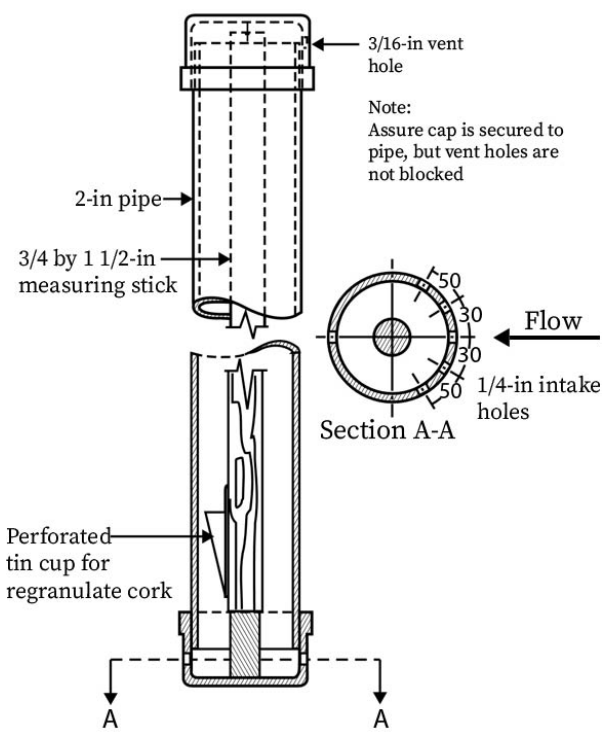

## 630.0503 Uses of Streamflow Data

A. **Computing Storm Runoff Volumes** - An important use of mean daily flows is in computing storm runoff volumes including baseflow (example 5–1) or excluding it (example 5–2).

(1) Example 5–1: Total runoff for an annual flood

(i) Determine: Use data in figures 5–1 and 5-4 to determine total runoff (including baseflow) for the annual flood and largest peak rate in year.

(ii) Solution:

- *Step 1.* Identify largest mean daily peak flow of the year in figure 5–1 and summarized in the table in figure 5-4. This is 343 cubic feet per second and occurs on December 31.
- *Step 2.* Find the low point of mean daily discharge occurring before the rise of the annual flood. This is 47 cfs and occurs on December 28 (figure 5–4).
- *Step 3.* Find the date on the receding side of the flood when the flow is about equal to the low point of December 28. This is 49 cfs and occurs on January 9. The flows between January 9 and January 14 are considered the normal river flow, not part of the flood flow.
- *Step 4.* Add the mean daily discharges for the flood period from December 29 through January 9 (the starred discharges in table 5–1). The sum, which is the total runoff, is 1,941 cubic feet per second-day.

  - Runoff in cubic feet per second per day ($ft^3$/s-d or cfs-day) can be converted to other units using appropriate conversion factors (Section 630.2203 in NEH Part 630, Chapter 22). For instance, to convert the result in example 5–1 to inches, use the conversion factor 0.03719 inches per cfs-day per square mile, the sum of step 4, and the watershed drainage area in square miles (from figure 5-1):

$$0.03719 \frac{in/cfs \bullet day}{mi^2} (1{,}941\ cfs \bullet day)(35\ mi^2) = 2.0625\ in$$

  - Round this to 2.1 inches.

(iii) If the flow on the receding side does not come down far enough, the usual practice is to determine a standard recession curve using well-defined recessions of several floods, fit this standard curve to the appropriate part of the plotted record, and estimate the mean daily flows as far down as necessary.

(iv) If only the direct runoff is needed, the baseflow can be removed by any one of several methods. A simple method assuming continuing constant baseflow may be accurate enough for many situations. This method is used in example 5-2.

**Figure 5-4.** Mean daily discharges, annual flood period (excerpt from fig. 5–2)

| Date | Mean daily discharge ($ft^3/s$) | Remarks |
|---|---|---|
| ***December*** | | |
| 26 | 59 | Flow from previous rise |
| 27 | 51 | Flow from previous rise |
| 28 | 47 | Low point of flow |
| 29 | *63 | Rise of annual flow begins |
| 30 | *235 | Rise of annual flood continues |
| 31 | *343 | Date of peak rate |
| ***January*** | | |
| 1 | *292 | Flood receding |
| 2 | *210 | Flood receding |
| 3 | *153 | Flood receding |
| 4 | *209 | Flood receding |
| 5 | *146 | Flood receding |
| 6 | *99 | Flood receding |
| 7 | *79 | Flood receding |
| 8 | *63 | Flood receding |
| 9 | *49 | Flood receded to point at begin of rise |
| 10 | 40 | End of flood period |
| 11 | 35 | Normal streamflow |
| 12 | 30 | Normal streamflow |
| 13 | 28 | Normal streamflow |
| 14 | 29 | New rise begins |

*Data used in examples 5-1 and 5-4

(2) Example 5–2: Direct runoff for an annual flood

(i) Determine: Use the data in figure 5–1, summarized in figure 5-4 determine direct runoff (excluding baseflow) for the annual flood. Use total runoff in cubic feet per second-day ($ft^3$/s-d) (excluding baseflow) from example 5–1 data.

(ii) Solution:

- *Step 1. D*etermine the average baseflow for the flood period. This is an average of the flows on December 28 and January 9:

$$\frac{(47+49)}{2} = 48\ cfs$$

- *Step 2.* Compute the volume of baseflow. The table in figure 5-41 shows the flood period (starred discharges) to be 12 days. Therefore, the volume of baseflow is:

$$12\ \text{days}(48\ \text{cfs}) = 576\ \ \text{cfs} \bullet day$$

- *Step 3.* Subtract total baseflow from total runoff to get total direct runoff:

$$1{,}941 - 576 = 1{,}365\ cfs \bullet day$$

- *Step 4.* Convert to inches. Use the conversion factor 0.03719 (from conversion table at end of NEH, Part 630, Chapter 22), the total direct runoff

in cubic feet per second-day from step 3, and the watershed drainage area in square miles (from the source of data, figure 5–1):

$$0.03719\ \frac{in/cfs \bullet day}{mi^2}\ (1{,}365\ cfs \bullet day)(35\ mi^2) = 1.4504\ in$$

- *Step 5*. Round this to 1.5 inches.

B. **Transposition of streamflow records to estimate flows on ungaged watersheds**

(1) Transposition of streamflow records is the use of records from a gaged watershed to represent the records of an ungaged watershed in the same climatic and physiographic region. The table in figure 5-5 lists some of the data generally transposed and the factors affecting the correlations between data for the gaged and ungaged watersheds. If a user has the type of data listed on the left column, the ease of readily transposing the data to a watershed with the characteristics listed across the top is indicated by an A or a blank. The A means that a considerable amount of additional analysis may be required to transpose the data. For example, where there are large distances between watersheds (watersheds with similar characteristics in all respects except they are separated by a large distance), transposing total annual runoff and average annual runoff from one watershed to another is reasonable since these watersheds are in the same climatic and physiographic region. When transposing other data from the column on the left where there are large distances between watersheds such as individual flood, peak rates should not be directly transposed without first analyzing the precipitation amounts on both watersheds along with spatial and temporal precipitation distribution. This is general guidance and there are certainly exceptions. Guidelines for Determining Flood Flow Frequency Bulletin 17C (USGS, 2019 contains information and references on such topics as comparing similar watersheds and how to handle flooding caused by different type of events.

**Figure 5-5.** Factors affecting the correlation of data: A guide to the transposition of streamflow

| | Factors – An A indicates an adverse effect on correlations and additional analysis is necessary to make an adequate transposition. If blank or without the A, the adverse effect is minor. | | | | |
|---|---|---|---|---|---|
| **Data** | **Large distance between watersheds** | **Large difference in sizes of watershed response lag.** | **Runoff from small-area thunderstorm** | **Large difference in sizes of drainage area** | **Difference in hydrologic soil-cover complexes (CN)** |
| Flood dates | A | A | A | A | A |
| Number of floods per year | A | A | A | A | A |
| Individual flood, peak rate | A | A | A | A | A |
| Individual flood, volume | A | | A | A | A |
| Total annual runoff | | | A | A | A |
| Average annual runoff | | | A | A | A |

(2) Data may be transposed with or without changes in magnitude depending on the type of data and the parameters influencing the information. Runoff volumes from individual storms, for instance, may be transposed without change in magnitude, if the gaged and ungaged watersheds are alike in all respects. If the hydrologic soil-cover complexes (CN) differ though, it is necessary to use figure 5–6, as shown in example 5–3.

(3) Example 5–3: Prediction of runoff from an ungaged site using a similar gaged site
   (i) Determine: Determine the runoff volume from an ungaged site with CN=83using a comparable gaged watershed with CN=74 that has a direct runoff of 1.60 inches.
   (ii) Solution:
   - *Step 1.* Enter figure 5–6 at direct runoff of 1.60 inches.
   - *Step 2.* Read across to CN=74 and then upward to CN=83.
   - *Step 3.* From the runoff scale, read a runoff of 2.29 inches.

(4) Transposition of flood data and number of floods per year is described in NEH Part 630 Chapter 18, and transposition of total and average annual runoff is described in NEH Part 630 Chapter 20.

(5) Peak discharge frequency values are often needed at watershed locations other than the gaged location. Peak discharges may be extrapolated upstream or downstream using stream gages for which frequency curves have been determined. In addition, peak discharges may also be transferred or correlated from gage data of a nearby stream with similar basin characteristics. More information on specific techniques is available in NEH Part 630 Chapter 18, and in NEH Part 654 Chapter 5.

C. **Volume-duration-probability analysis -** Daily flow records are also used for volume-duration probability (VDP) analysis (USDA 1966; USACE 1975). NEH Part 630 Chapter 18 presents a probability distribution analysis of the annual series of maximum runoff volumes for 1, 3, 7, 15, 30, 60, and 90 days. These values are then used for reservoir storage and spillway design as described in Chapter 21. Low-flow VDP analysis is made on minimum volumes over selected durations. These values are useful in water quality evaluations (e.g., for determining the probability that the concentration of a substance will be exceeded). They are also used to describe minimum flow for fisheries (USFWS 1976).

D. **Probability-duration analysis** - Daily flow records are used for probability-duration analysis to analyze the effects of inundation on floodplain and wetland ecosystems. Annual 15-day low-flow data is used as objective criteria in wetland determinations, for instance. Information on the use of daily flow data for wetland determinations is included in NEH Part 650 Chapter 19.

E. **Flow duration curves**

(1) Daily flow records are also used to construct flow duration curves. These curves show the percentage of time during which specified flow rates are exceeded.

(2) The flow duration curve is one method used to determine total sediment load from periodic samples (USDA 1983). It can also be used for determining loading of other impurities, such as total salts, and can be related to fishery values (USFWS 1976). Flow duration curves are sometimes plotted on probability paper. It should be noted that the value plotted is the percentage of time exceeded, and this should not be confused with probability of occurrence.

**Figure 5-6.** Solution for runoff equation

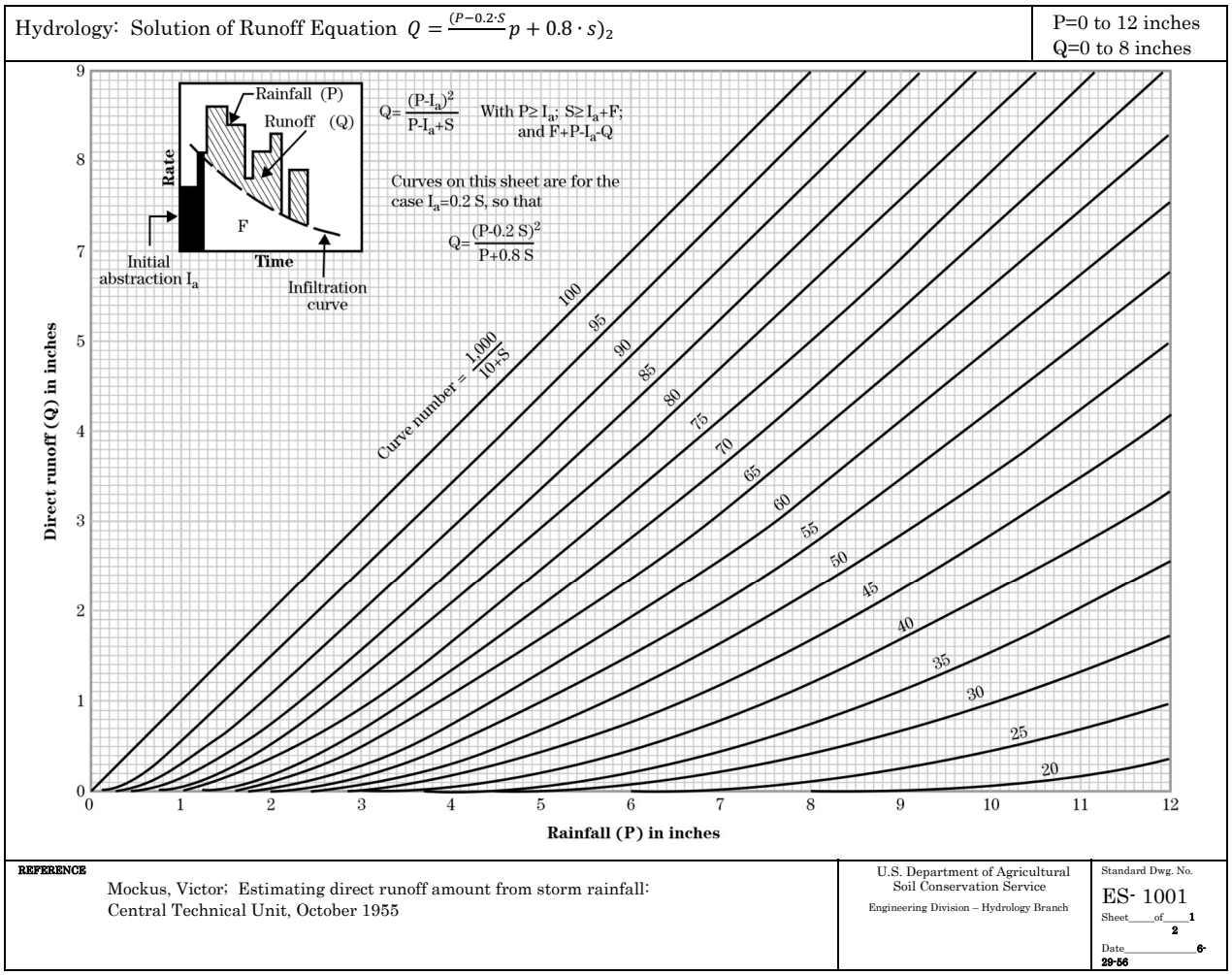


## F. Determination of Runoff Curve Numbers from Storm Rainfall and Streamflow Data

(1) Storm rainfall and associated streamflow data for annual floods can be used to estimate runoff curve numbers, CN.

(2) Two methods of computing CN from storm rainfall and streamflow data are presented here. The first method uses a classical graphical approach. The second method uses a statistical approach.

(3) Example 5–4: Graphical approach to establish runoff curve numbers

(i) Determine: Determine the CN using the classic graphical method. Use the rainfall and runoff data of table 5–3.

(ii) Solution:

- Plot the runoff against the rainfall on the graph as shown in figure 5–8.
- Determine the curve of figure 5–8 that divides the plotted points into two equal groups. That is the median curve number. It may be necessary to interpolate between curves, as was done in figure 5–8. The curve number for this watershed is 88.
- Figure 5–8 also shows bounding curves for the data. The curves were determined using the relationship given in the table in figure 5-7. Note that

these curves generally mark the extremes of the data except for a few outliers.

(4) Example 5–5: Statistical approach to establish runoff curve numbers

(i) Determine: Determine the CN using statistical methods. Use the rainfall and runoff data from th table in figure 5-7 for the ARS Experimental Watershed 2 near Treynor, Iowa (plotted in figure 5-8).

(ii) Solution: In this approach, the scatter in the data apparent in figure 5–8 is assumed to be described by a log normal distribution about the median. This approach has been explored by Hjelmfelt et al. (1982); Hjelmfelt (1991); and Hauser and Jones (1991).

- The curve number determined in example 5–4 was the curve number that divided the points into two equal groups. That is, it is the median curve number. This median value can also be determined using the following computations:

- *Step 1.* Compute the potential maximum retention (S) for each of the annual storms of table 5–3 using:

$$S = 5\left[P + 2Q - (4Q^2 + 5PQ)^{\frac{1}{2}}\right]$$

-- This equation is an algebraic rearrangement of the runoff equation of Part 630, Chapter 10, Estimation of Direct Runoff From Storm Rainfall, where P is rainfall and Q is runoff.

- *Step 2.* The logarithm of each S is taken. Base 10 was used for table 5–3; however, natural logarithms can also be used.

- *Step 3.* The mean and standard deviation of the logarithms of S are determined. The mean of the transformed values, that is mean of log(S), is equivalent to the median of the raw values.

$$\text{Log (S) = mean (log(S))} = \frac{\sum \log(S)}{N}$$

$$std.dev(\log(S)) = \frac{\sqrt{\sum[\log(S)\, mean(\log(S))]}^2}{N-1}$$

For the data of figure 5–8, the values computed are:

mean log(S)= 0.1389

std. dev. log(S)= 0.3452

- *Step 4.* The mean of the logarithms of a log normally distributed variable is the median of the original variable. Thus, the antilogarithm of the result of the standard deviation equation gives a statistical estimation of the median S. If base 10 logarithms are used:

$$median\ S = 10^{mean \log(S)} = 10^{0.1389} = 1.3769$$

- Step 5. The curve number is then given by:

$$CN = \frac{1{,}000}{10+S} \quad CN = \frac{1{,}000}{10+S} = \frac{1{,}000}{10+1.3769} = 87.9$$

Use CN = 88

- *Step 6.* Curve numbers for 10 percent and 90 percent extremes of the distribution are given by:

$$\log(S10) = mean\left(Log(S)\right) - 1.282\ std.dev.(\log(S))$$

$$\log(S90) = mean\left(Log(S)\right) + 1.282\ std.dev.(\log(S))$$

-- In which 1.282 and –1.282 are the appropriate percentiles of the normal distribution. For the data of figure 5-7, the results are 73 and 95.

-- These results are in good agreement with the extremes that were determined using the graphical method, which adds additional confirmation that the 10 and 90 percent extremes agree with figure 5–8 as given by Hjelmfelt et al. (1982) and Hjelmfelt (1991).

**Figure 5-7.** Curve numbers for events with annual peak discharge for Watershed 2 near Treynor, IA

Watershed data: 82.8 acres of corn, using conventional tillage on contour, on Ida and Monona soils

| Year | Month | Day | Rain amount (inch) | Runoff amount (inch) | Peak discharge ($ft^3/s$) | S (inch) | Log(s) | CN | Rounded CN |
|---|---|---|---|---|---|---|---|---|---|
| 1964 | Jun | 22 | 1.18 | 0.58 | 216.8 | 0.7826 | -0.1065 | 92.7 | 93 |
| 1965 | Jun | 29 | 1.30 | 0.64 | 157.0 | 0.8601 | -0.0665 | 92.1 | 92 |
| 1966 | Jun | 26 | 1.04 | 0.40 | 153.0 | 0.9538 | -0.0205 | 91.3 | 91 |
| 1967 | Jun | 20 | 5.71 | 3.76 | 406.0 | 2.1386 | 0.3301 | 82.4 | 82 |
| 1968 | Jun | 13 | 0.97 | 0.28 | 94.0 | 1.1855 | 0.0739 | 89.4 | 89 |
| 1969 | Aug | 20 | 2.23 | 0.17 | 36.9 | 5.7593 | 0.7604 | 63.5 | 63 |
| 1970 | Aug | 2 | 1.92 | 0.70 | 282.4 | 1.8691 | 0.2716 | 84.3 | 84 |
| 1971 | May | 18 | 1.10 | 0.73 | 214.0 | 0.4038 | -0.3938 | 96.1 | 96 |
| 1972 | May | 5 | 0.62 | 0.29 | 121.0 | 0.4426 | -0.3540 | 95.8 | 96 |
| 1973 | Sep | 26 | 1.25 | 0.28 | 43.7 | 1.8674 | 0.2712 | 84.3 | 84 |
| 1974 | Aug | 17 | 1.12 | 0.10 | 23.5 | 2.7270 | 0.4357 | 78.6 | 79 |
| 1975 | Aug | 29 | 1.66 | 0.30 | 54.2 | 2.8590 | 0.4562 | 77.8 | 78 |
| 1976 | Jul | 17 | 0.57 | 0.02 | 4.2 | 1.8396 | 0.2647 | 84.5 | 84 |
| 1977 | May | 8 | 1.06 | 0.43 | 145.4 | 0.9129 | -0.0396 | 91.6 | 92 |
| 1978 | May | 19 | 1.12 | 0.20 | 84.1 | 1.9431 | 0.2885 | 83.7 | 84 |
| 1979 | Mar | 18 | 0.93 | 0.54 | 17.2 | 0.4617 | -0.3356 | 95.6 | 96 |
| 1980 | Jun | 15 | 0.83 | 0.34 | 207.0 | 0.7064 | -0.1501 | 93.4 | 93 |
| 1981 | Aug | 1 | 1.63 | 0.33 | 104.0 | 2.6110 | 0.4168 | 79.3 | 79 |
| 1982 | Jun | 14 | 1.35 | 0.50 | 151.0 | 1.2917 | 0.1112 | 88.6 | 89 |
| 1983 | Jun | 13 | 1.78 | 0.41 | 104.0 | 2.6060 | 0.4160 | 79.3 | 79 |
| 1984 | Jun | 12 | 0.76 | 0.45 | 104.0 | 0.3627 | -0.4405 | 96.5 | 97 |
| 1985 | May | 14 | 1.26 | 0.22 | 35.6 | 2.2159 | 0.3456 | 81.9 | 82 |
| 1986 | Apr | 27 | 1.94 | 0.75 | 191.0 | 1.7687 | 0.2477 | 85.0 | 85 |
| 1987 | May | 26 | 0.86 | 0.38 | 55.0 | 0.6643 | -0.1776 | 93.8 | 94 |
| 1988 | Jul | 15 | 1.96 | 0.03 | 2.8 | 7.3724 | 0.8676 | 57.6 | 58 |

**Figure 5-8.** Rainfall versus direct runoff plotted from an experimental ARS watershed in Treynor, IA

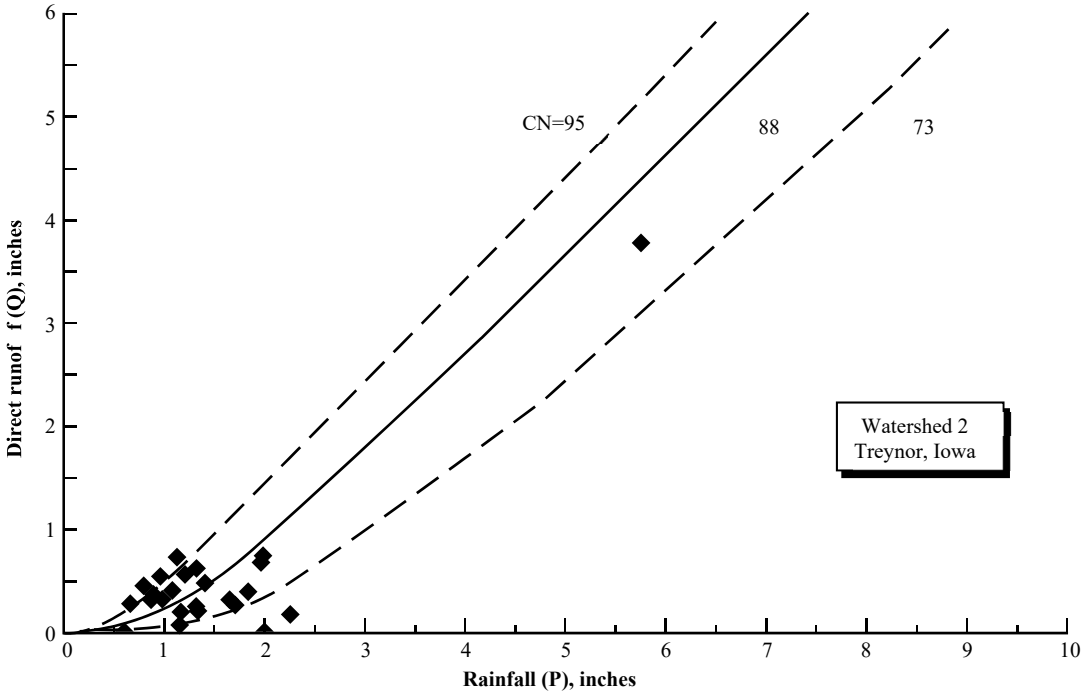


## 630.0504 Considerations for Use of Streamflow Data

Stream gage frequency analysis according to the Guidelines for Determining Flood Flow Frequency, Bulletin 17C (England, et al., 2019). Use of the Bulletin 17C procedures are required for use in all Federal planning involving water and related land resources projects. While the following considerations focus on stream gage frequency analysis, they are important points to consider whenever working with stream gage data.

(1) **Data Quality** - In performing a frequency analysis of peak discharges, certain assumptions need to be verified including data independence, data sufficiency, climatic cycles and trends, watershed changes, mixed populations, and the reliability of flow estimates. The streamflow gage records must provide random, independent flow event data. These assumptions need to be kept in mind, otherwise the resultant discharge-frequency distribution may be significantly biased, leading to inappropriate designs and possible loss of property, habitat, and human life.

(2) **Data Independence** - To perform a valid discharge-frequency analysis, the data points used in the analysis must be independent (i.e., not related to each other). Flow events oftentimes occur over several days, weeks, or even months, as can be the case with snowmelt. Using subsequent days of high flow from the same event in a frequency analysis is not appropriate since these data are dependent upon each other. If subsequent days of high flow data are used in a frequency analysis, it would erroneously suggest that the event occurs more frequently. As a result, the predicted flow would be higher than the actual peak flow for a given return interval. It is common practice to minimize this problem by extracting annual peak flows from the annual streamflow record to use in the frequency analysis. The annual maximum flow for each water year (October 1 to September 30) is most frequently used in flow frequency analyses. Partial duration analysis (with checks for data independence) can

be used especially for frequent flow events and to estimate flows with recurrence intervals of less than 1year.

(3) **Data Sufficiency**

(i) Gage records should contain at least 10 years of consecutive peak flow data and, to minimize bias, should span both wet and dry years. If a gage record is shorter, it may be advisable to consider relying more on other methods of hydrologic estimations. When the desired event has a frequency of occurrence of less than 2 to 5 years, a *partial duration series* is recommended. This is a subset of the complete record where the values are above a preselected base value. The base value is typically chosen so that there are no more than three events in a given year. In this manner, the magnitude of events that are equaled or exceeded three times a year can be estimated. Care must be taken to ensure that multiple peaks are not associated with the same event so that independence is preserved. The return period for events estimated with the use of a partial duration series is typically 0.5 year less than what is estimated by an annual series (Linsley et al. 1975). While this difference is fairly small at large events (100 years for a partial versus 100.5 years for an annual series), it can be significant at more frequent events (1 year for a partial versus 1.5 years for an annual series). It should also be noted that there is more subjectivity at the ends of both the annual and partial duration series frequency curves.

(ii) It is also important to use data that fully captures the peak for peak flow analysis. If a stream is flashy (typical of small watershed) the peak may occur over hours, or even minutes, rather than days. If daily averages are used, then the flows may be artificially low and result in an underestimate of storm event values. Therefore, for small watersheds, it may be necessary to look at hourly or even 15-minute peak data.

(4) **Climatic Cycles and Trends**

(i) Climatic cycles and trends have been identified in meteorological and hydrological records. Cycles in streamflow have been found in the world's major rivers. For example, Pekarova et al. (2003) identified 3.6-, 7-, 13-, 14-, 20-, 22-, 28-, and 29-year cycles of extreme river discharges throughout the world. Some cycles have been associated with oceanic cycles, such as the El Niño Southern Oscillation, in the Pacific (Dettinger et al. 2000) and the North Atlantic Oscillation (Pekarova et al. 2003). Trends in streamflow volumes and peaks are less apparent. However, trends in streamflow timing are likely, as has been presented in Cayan et al. (2001) for the Western United States.

(ii) The identification of both cycles and trends is hampered by the relatively short records of streamflow available—as streamflow data increases, more cycles and trends may be identified. However, sufficient evidence does currently exist to warrant concern for the impact of climate cycles on the frequency analysis of peak flow data, even with 20, 30, or more years of record.

(iii) When performing a frequency analysis, it can be important to also analyze data at neighboring gages (that have longer or differing periods of record) to assess the reasonableness of the streamflow data and frequency analysis at the site of interest. Keeping in mind the design life of the planned project and relating this to any climate cycles and trends identified during such a period can identify, in at least a qualitative manner, the appropriateness of use of streamflow data. Climate bias is described in more detail in 210–NEH, Part 654, Chapter 5.

(iv) Paleoflood studies (studies that use the techniques of geology, hydrology, and fluid dynamics to exploit the long-lived evidence often left by floods) may lead to a more comprehensive frequency analyses. Such studies are more relevant for

projects with long design lives, such as dams. For more information on paleoflood techniques, see the text Ancient Floods, Modern Hazards: Principles and Applications of Paleoflood Hydrology (House et al. 2001).

(5) **Watershed changes**

(i) Watershed hanges can change the frequency of high flows in streams. These changes, which are primarily caused by humans, include urbanization; reservoir construction, with the resulting attenuation and evaporation; stream diversions; and changes in plant cover as a result from deforestation from logging, significant insect infestation, high intensity fire, and reforestation. Before a discharge-frequency analysis is used or to judge how the frequency analysis is to be used, watershed history and records should be evaluated to ensure that no significant watershed changes have occurred during the period of record. If such a significant change has occurred in the record, the period of record may need to be altered or the frequency analysis may need to be used with caution, with full understanding of its limitations.

(ii) Particular attention should be paid to watershed changes when considering the use of data from discontinued gages. It was common to discontinue gages with small (< 10 $mi^2$) drainage areas in the early 1980s. Aerial photographs can provide useful information in determining if the land use patterns of today are similar to the land use patterns during the gage's period of record. Each gage site has to be evaluated on an individual basis to determine whether the existing cross sections represent those used to develop the past flow records for the site.

(6) **Mixed populations** - At many locations, high flows are created by different types of events. For example, in mountain watersheds, high flow may result from snowmelt events, rain on snow events, or rain events. Also, tropical cyclones may produce differences from frontal systems. Gages with records that contain such different types of events require special treatment such as removing those events from the record if the report is to only reflect flows for a particular type of event.

(7) **Reliability of flow estimates**

(i) Errors exist in streamflow records, as with all measured values. With respect to USGS records, data that are rated as excellent means that 95 percent of the daily discharges are within 5 percent of their true value, a good rating means that the data are within 10 percent of their true value, and a "fair" rating means that the data are within 15 percent of their true value. Records with greater than 15 percent error are considered poor (USGS 2002).

(ii) These gage inaccuracies are often random, possibly minimizing the resultant error in the frequency analysis. Overestimates may be greatest for larger, infrequent events, especially the historic events. If consistent overestimation has occurred, the error is not random but is, instead, a systematic bias that may have resulting ramifications.

(8) **Regulated flows** - Flows below dams are considered to be regulated flow. The normal statistical techniques in Bulletin 17C can not be used in these situations. However, in some cases, standard graphic statistical techniques can be used to determine the frequency curve. A review of the reservoir operation plan and project design document will provide information on the downstream releases

## 630.0505 References

A. Cayan, D.R., M. Kammerdiener, D. Dettinger, J.M. Caprio, and D.H. Peterson. 2001. Changes in the onset of spring in the western United States. Bull. Am. Met. Soc. 82(3), 399–415.

B. Copeland, R.R., D.N. McComas, C.R. Thorne, P.J. Soar, M.M. Jonas, and J.B. Fripp. 2001. Hydraulic design of stream restoration projects, USACE ERDC/CHL TR–01–28.

C. Dettinger, M.D., D.R. Cayan, G.J. McCabe, and J.A. Marengo. 2000. Multiscale streamflow variability associated with El Nino/Southern Oscillation, in El Nino and the Southern Oscillation. H.F. Diaz, and V. Markgraf, eds., Cambridge University Press, New York, p. 114–147.

D. England, J.F., Jr., Cohn, T.A., Faber,B.A., Stedinger, J.R., Thomas, W.O., Jr., Veilleux A.G., Kiang, J.E., and Mason, R.R., Jr., 2019, Guidelines for determining flood flow frequency – Bulleting 17C (ver. 1.1, May 2019): U.S. Geological Survey Techniques and Methods, book 4, chap. B5, 148 p., https://doi.org/10.3133/tm4B5.

E. Hauser, V.L., and O.R Jones. 1991. Runoff curve numbers for the southern high plains. Trans. Amer. Soc. Agricul. Engrs., vol. 3, no. 1. pp 142–148.

F. Hjelmfelt, A.T. 1991. An investigation of the curve number procedure. J. Hydraulic Eng., Amer. Soc. Civil Engrs., vol. 117, no. 6, pp 725–737.

G. Hjelmfelt, A.T., L.A. Kramer, and R.E. Burnwell. 1982. Curve numbers as random variables, rainfall runoff relationship. In Resources Publications, V.P. Singh, ed., Littleton, CO. pp. 365–370.

H. House, P.K, R.H. Webb, V.R. Baker, and D.R. Levish (ed.). 2001. Ancient floods, modern hazards: Principles and practices of paleoflood hydrology. American Geophysical Union.

I. Linsley Jr., R.K., M.A. Kohler, J.L. Paulhus. 1975. Hydrology for Engineers. 2nd Ed. McGraw-Hill Book Co. New York, NY.

J. Pekarova, P., P. Miklanek, and J. Pekar. 2003. Spatial and temporal runoff oscillation analysis of the main rivers of the world during the 19th-20th centuries. Journal of Hydrology, vol. 274, issue 1, pp 47–61.

K. U.S. Army Corps of Engineers. 1975. Hydrologic engineering methods for water resource development, vol. 3. Hydrologic Frequency Analysis, HEC, Davis, CA.

L. U.S. Department of Agriculture, Agricultural Research Service. 1979. Field manual for research in agricultural hydrology. Agricultural Handbook No. 224.

M. U.S. Department of Agriculture, Agricultural Research Service. 1989. Hydrologic data for experimental agricultural watersheds in the United States, 1978–79. Misc. Pub. 1469.

N. U.S. Department of Agriculture, Forest Service. 1964. Stream-gaging stations for research on small watersheds. K.G. Reinhart and R.S. Pierce, Agric. Handb. 268.

O. U.S. Department of Agriculture, Natural Resources Conservation Service. 1997. National Engineering Handbook, Part 623, Irrigation, Chapter 9, Water Measurement. Washington, DC.

P. U.S. Department of Agriculture, Natural Resources Conservation Service. 2002. National Engineering Handbook, Part 630, Hydrology, Chapter 8, Land Use and Treatment Classes. Washington, DC.

Q. U.S. Department of Agriculture, Natural Resources Conservation Service. 2004. National Engineering Handbook, Part 630, Hydrology, Chapter 9, Hydrologic Soil-Cover Complexes. Washington, DC.

R. U.S. Department of Agriculture, Natural Resources Conservation Service. 2004. National Engineering Handbook, Part 630, Hydrology, Chapter 10, Estimation of Direct Runoff from Storm Rainfall. Washington, DC.

S. U.S. Department of Agriculture, Natural Resources Conservation Service. 2007. National Engineering Handbook, Part 654, Stream Restoration Design, Chapter 5, Stream Hydrology. Washington, DC.

T. U.S. Department of Agriculture, Natural Resources Conservation Service. 2009. National Engineering Handbook, Part 630, Hydrology, Chapter 20, Watershed Yield. Washington, DC.

U. U.S. Department of Agriculture, Natural Resources Conservation Service. 2012. National Engineering Handbook, Part 630, Hydrology, Chapter 14, Stage Discharge Relations. Washington, DC.

V. U.S. Department of Agriculture, Natural Resources Conservation Service. 2012. Hydrology tools for wetland determinations, National Engineering Handbook 650, Chapter 19, Washington, DC.

W. U.S. Department of Agriculture, Natural Resources Conservation Service. 2012. National Engineering Handbook, Part 630, Hydrology, Chapter 22, Glossary. Washington, D.C.

X. U.S. Department of Agriculture, Natural Resources Conservation Service. 2012. Stream restoration design handbook 654, Washington, DC.

Y. U.S. Department of Agriculture, Soil Conservation Service. 1972. National Engineering Handbook, Section 4, Hydrology, Chapter 21, Design Hydrographs. Washington, D.C.

Z. U.S. Department of Agriculture, Soil Conservation Service. 1983. National Engineering Handbook, Section 3, Sedimentation, Chapter 4, Transmission of Sediment by Water. Washington, D.C.

AA. U.S. Department of Agriculture, Soil Conservation Service. 1966. Hydrology study—A multipurpose program for selected cumulative probability, distribution analysis. W.H. Sammons, SCS–TP–148, Washington, DC.

BB. U.S. Department of Agriculture, Soil Conservation Service. 1980. National Engineering Manual, part 630, Hydrology, Washington, DC.

CC. U.S. Department of Agriculture, Soil Conservation Service. 1983(a). Transmission of sediment by water. National Engineering Handbook, Section 3, Sedimentation, chapter 4, Washington, DC.

DD. U.S. Department of Agriculture, Soil Conservation Service. 1983(b). Selected statistical methods, National Engineering Handbook, Part 630, Hydrology, Chapter 18.

EE. U.S. Fish and Wildlife Service. 1976. Methodologies for the determination of stream resource flow requirements: an assessment. C.B. Stalker and J.L. Arnette (ed.), Office of Biological Services, Utah State University, Logan, UT.

FF. U.S. Geological Survey. 1964. Compilation of records of surface waters of the United States, October 1950 to September 1960, 11 Part 8. Water Supply Paper 1732, Western Gulf of Mexico Basin.

GG. U.S. Geological Survey. 1968. Techniques of water resources investigations of the U.S. Geological Survey, chapter A7, stage measurement at gaging stations. In Book 3, Application of hydraulics, T.J. Buchanan and W.P. Somers, U.S. Gov. Print. Of., Washington, DC.

HH. U.S. Geological Survey. 1979. Flow duration curves. USGS Water Supply Paper 1542–A, J.K. Searcy, Washington, DC.

II. U.S. Geological Survey. 1981. WATSTORE users guide. USGS Open File Report 79–1336, Washington, DC.

JJ. U.S. Geological Survey. 1982. Guidelines for determining flood flow frequency. Office of Water Data Coordination. Bulletin 17B.

KK. U.S. Geological Survey. 1982. Measurement and computation of streamflow, vol. 1: Measurement of stage and discharge, and vol. 2: Computation of discharge. S.E. Rantz, et al. USGS Water Supply Paper 2175.

LL. U.S. Geological Survey. 1994. Water resources data for Indiana. 1973. USGS Surface Water-Supply Papers, prepared in cooperation with the State of Indiana and other agencies.

MM. U.S. Geological Survey. 1996. Regional equations for estimation of peak-streamflow frequency for natural basins in Texas, W.H. Asquith, and R.M. Slade, Jr., Report 96–4307.

NN. U.S. Geological Survey. 2002. Water resources data for Colorado, water year 2001, vol. 2. Colorado River Basin, Water Resources Division.

OO. U.S. Geological Survey. 2002. The National Flood Frequency Program, Ver. 3: A computer program for estimating magnitude and frequency of floods for ungaged sites, K.G. Ries, III, and M.Y. Crouse (compilers), Report 02–4168