United States Department of Agriculture
Natural Resources Conservation Service

Part 623 Irrigation National Engineering Handbook

Chapter 8 Irrigation Pumping Plants

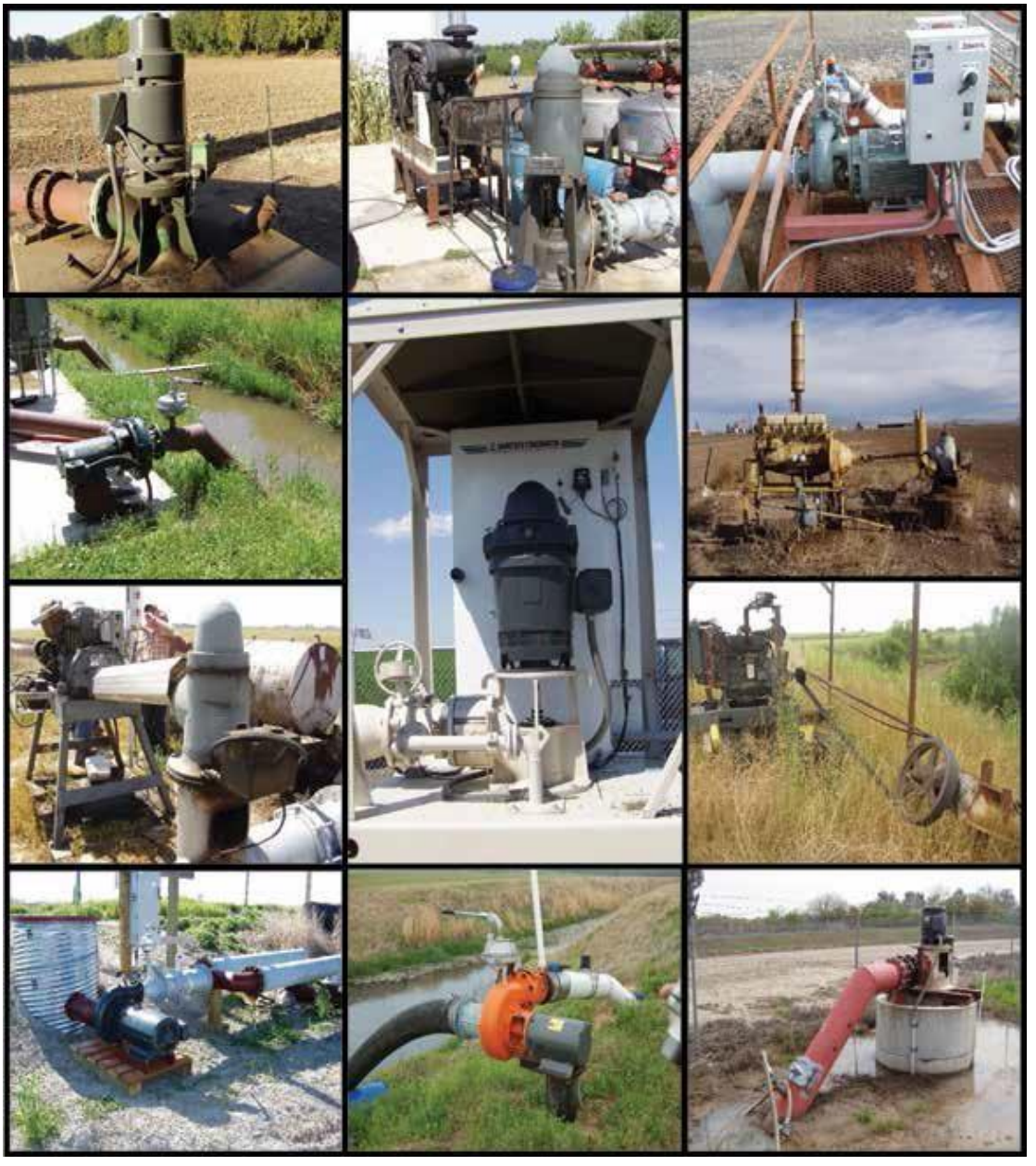

(210–VI–NEH, Amend. 78, January 2016)

Issued January 2016

The U.S. Department of Agriculture (USDA) prohibits discrimination against its customers. If you believe you experienced discrimination when obtaining services from USDA, participating in a USDA program, or participating in a program that receives financial assistance from USDA, you may file a complaint with USDA. Information about how to file a discrimination complaint is available from the Office of the Assistant Secretary for Civil Rights. USDA prohibits discrimination in all its programs and activities on the basis of race, color, national origin, age, disability, and where applicable, sex (including gender identity and expression), marital status, familial status, parental status, religion, sexual orientation, political beliefs, genetic information, reprisal, or because all or part of an individual's income is derived from any public assistance program. (Not all prohibited bases apply to all programs.)

To file a complaint of discrimination, complete, sign, and mail a program discrimination complaint form, available at any USDA office location or online at www.ascr.usda.gov, or write to:

USDA
Office of the Assistant Secretary for Civil Rights
1400 Independence Avenue, SW.
Washington, DC 20250–9410

Or call toll free at (866) 632–9992 (voice) to obtain additional information, the appropriate office or to request documents. Individuals who are deaf, hard of hearing, or have speech disabilities may contact USDA through the Federal Relay service at (800) 877–8339 or (800) 845–6136 (in Spanish). USDA is an equal opportunity provider, employer, and lender.

Persons with disabilities who require alternative means for communication of program information (e.g., Braille, large print, audiotape, etc.) should contact USDA's TARGET Center at (202) 720–2600 (voice and TDD).

Acknowledgments

Chapter 8, Irrigation pumping plants, was originally prepared and printed in 1950 under the direction of Conservation Engineering Division (CED), Washington, DC, Soil Conservation Service (SCS), now the Natural Resources Conservation Service (NRCS).

In 2004, under the direction of **Ron Marlow** (retired), Washington, DC, **Dr. Tatsuaki Nakatofrom**, and **Lucille A. Carver**, Mississippi Riverside Environmental Research Station (LACMRERS), University of Iowa was given the contract to revise and update chapter 8. Final revisions and editing to the chapter were provided by **Clarence Prestwich**, irrigation engineer, West National Technology Center (WNTSC), NRCS, Portland, OR; **Peter Robinson**, water management engineer, WNTC, NRCS, Portland, OR; **Pat Wiley**, drainage engineer WNTC, NRCS, Portland, OR; **John Busch** (retired); **Tony Stevenson** (retired); **Jerry Walker**, water management engineer, CNTC, NRCS, Ft Worth, TX, and multiple others. It was finalized under the guidance of **Doug Toews** and **Rob Sampson**, national water management engineers, CED, NRCS, Washington, DC.

The editing, illustrations, and formatting were provided by **Suzi Self**, editorial assistant, and **Wendy Pierce**, illustrator, National Geospatial Center of Excellence (NGCE), NRCS, Fort Worth, TX.

Chapter 8 Irrigation Pumping Plants

Contents

623.0801 General 8–1
(a) Introduction to agricultural pumping plants 8–1
(b) Pumping system components 8–1
(c) Liquids and liquid flow characteristics 8–4
(d) Pump curves 8–5
(e) Pump speed selection 8–6
(f) Head loss 8–6
(g) Total dynamic head 8–7
(h) Work accomplished by pumping 8–8
(i) System curves 8–8

623.0802 Centrifugal pumps 8–13
(a) Centrifugal pump fundamentals 8–13
(b) Principal characteristics of centrifugal pumps 8–13
(c) Pump characteristic curves 8–17
(d) Data for selecting pump 8–20
(e) Installation 8–20
(f) Priming and startup 8–27
(g) Net positive suction head 8–31
(h) Troubleshooting 8–31

623.0803 Deep-well turbine pumps 8–33
(a) Deep-well turbine pump fundamentals 8–33
(b) Principal characteristics of deep-well turbine pumps 8–34
(c) Pump characteristic curves 8–35
(d) Data for selecting pump 8–36
(e) Installation 8–39

623.0804 Submersible pumps 8–42
(a) Submersible pump fundamentals 8–42
(b) Principal characteristics of submersible pumps 8–42
(c) Installation 8–43

623.0805 Propeller pumps 8–43
(a) Propeller pump fundamentals 8–43
(b) Principal characteristics of propeller pumps 8–45
(c) Pump characteristic curves 8–45
(d) Data for selecting pump 8–48
(e) Installation 8–48

623.0806 Positive displacement pumps 8–49
(a) Positive displacement pumps fundamentals 8–49
(b) Pump characteristic curves 8–50
(c) Types of PD pumps 8–51

623.0807 Pump drives 8–55
(a) General 8–55
(b) Direct drive 8–55
(c) Belt drive 8–55
(d) Gear head drive 8–57
(e) Magnetic drive 8–58
(f) Power takeoff 8–59

623.0808 Power for pumping 8–61
(a) General 8–61
(b) Electric motors 8–61
(c) Electric motor controls 8–65
(d) Internal combustion engines 8–68
(e) Tractor power 8–70
(f) Solar power 8–70
(g) Wind power 8–75
(h) Power requirements 8–76

623.0809 Cavitation, Water Hammer, Net Positive Suction Head, and Specific Gravity 8–78
(a) Net positive suction head 8–78
(b) Water hammer 8–84
(c) Cavitation 8–84
(d) Specific gravity 8–85

623.0810 Pump Sump Design and Pump Installation 8–86
(a) Sump design 8–86
(b) Determination of sump dimensions 8–87

623.0811 Pump controls and appurtenances 8–90
(a) Starters, relays and contactors 8–90
(b) Safety features 8–91
(c) Other controls and appurtenances 8–93
(d) Variable-frequency drives for electric motors 8–94

623.0812 Cost of irrigation pumping 8–103
(a) Introduction 8–103
(b) Electric motors and energy costs 8–103
(c) Nebraska Pumping Plant Performance Criteria 8–113
(d) Internal combustion engines and fuel costs 8–115
(e) Life-cycle cost analysis 8–118
(f) Unit abbreviations and conversion factors 8–118

623.0813 Pumping plant maintenance 8–119
(a) General recommendations 8–119
(b) Pumping plant maintenance of specific components 8–120
(c) Pump plant performance tracking 8–133

623.0814 References 8–135

Figures

Figure 8–1 Propeller pump impeller types 8–2

Figure 8–2 Pump coverage chart 8–3

Figure 8–3 Pump performance chart 8–5

Figure 8–4 Example of a pump selection chart 8–5

Figure 8–5 Example of pump and efficiency curves 8–6

Figure 8–6 Pump characteristics versus specific speed 8–7

Figure 8–7 System curve for a long pipeline with no elevation lift 8–9

Figure 8–8 The system curve for a short pipeline and an elevation lift of 20 feet 8–9

Figure 8–9 The system curve for a long pipeline and an elevation lift of 20 feet 8–9

Figure 8–10 System curve and pump curve 8–10

Figure 8–11 System curve for an 8-inch PVC pipe 2,000 feet in length and with an elevation lift of 20 feet 8–11

Figure 8–12 System curve shifts upwards when the water level declines 8–11

Figure 8–13 System curve change when a valve is partially closed 8–12

Figure 8–14 Effect of a water level decline on pump output 8–12

Figure 8–15 Horizontal centrifugal pump for surface or pit installation 8–14

Figure 8–16 Impeller types commonly used with centrifugal pumps 8–14

Figure 8–17 Effect of speed change on centrifugal pump performance 8–15

Figure 8–18 Example of the application of the affinity law to obtain new pump characteristics curves when the pump speed is changed 8–16

Figure 8–19 Typical characteristic curves for horizontal centrifugal pump 8–17

Figure 8–20 Head-discharge relationships for parallel and series operations 8–17

Figure 8–21 Layout of centrifugal pumping system used in determining total dynamic head (TDH) 8–21

Figure 8–22 Data sheet for selecting a centrifugal pump 8–21

Figure 8–23 Suggestions for installing centrifugal pumps 8–24

Figure 8–24 Examples of bad pump and pipe alignment 8–24

Figure 8–25 Proper suction pipe and pump installation 8–25

Figure 8–26 Vortex and air entrainment prevention 8–25

Figure 8–27 Pump station design to prevent air entrainment from cascading water 8–26

Figure 8–28 Example of pump intake screen cleaned by rotating sprays near Richland, WA 8–27

Figure 8–29 Pump unit on a flowing barge in an animal waste pond near Nampa, ID 8–27

Figure 8–30 Poor discharge piping practices 8–28

Figure 8–31 Priming with foot valve and water supply 8–29

Figure 8–32 Priming with foot valve and hand primer, blueberry farm near Fargo Lake, WA 8–29

Figure 8–33 Priming with exhaust primer 8–29

Figure 8–34 Priming with manifold primer 8–30

Figure 8–35 Priming by dry vacuum pump 8–30

Figure 8–36 Self-priming centrifugal pumps 8–31

Figure 8–37 Typical deep-well turbine pump 8–33

Figure 8–38 Typical characteristic curves for deep-well turbine pump: (A) operating at constant speed, and (B) head, efficiency, and horsepower at which a typical 10-in. turbine pump will deliver 500 gal/min 8–35

Figure 8–39 Layout of deep-well turbine pumping system used in determining TDH 8–37

Figure 8–40 Effect of changes in operating conditions on deep-well turbine pump efficiency 8–38

Figure 8–41 Characteristic curves for deep-well turbine pump 8–40

Figure 8–42 Typical deep-well turbine pump installation 8–41

Figure 8–43 Typical submersible pump 8–42

Figure 8–44 Typical axial and mixed flow pumps 8–44

Figure 8–45 Typical characteristic curves for an 18–inch axial flow, single-stage propeller pump with three different types of propellers 8–46

Figure 8–46 Layouts of propeller pumps in determining TDH in example 8–8 8–47

Figure 8–47 Typical PD pump curve 8–50

Figure 8–48 Diaphragm pump primer, tomato farm near Sacramento, CA 8–51

Figure 8–49 Windmill on range land north of Karney, NE, and internal diagram of piston pump 8–52

Figure 8–50 Diaphragm pump primer on a tomato farm near Sacramento, CA 8–53

Figure 8–51 Cross section of a helical pump 8–54

Figure 8–52 Examples of direct drive pumps 8–55

Figure 8–53 Direct drive pump with gasoline engine 8–55

Figure 8–54 Examples of flat belt drives 8–56

Figure 8–55 Examples of V-belt drives 8–56

Figure 8–56 Turbine pump with V-belt drive south of Crowley, LA 8–57

Figure 8–57 Examples of right-angle gear-head drives 8–58

Figure 8–58 Vertical magnetic drive, A & B irrigation project near Rupert, ID 8–59

Figure 8–59 Examples of power-takeoff drives 8–60

Figure 8–60 PTO pump in a manure pit in Livingston County, IL 8–60

Figure 8–61 Pump and pump shade near Othello, WA 8–63

Figure 8–62 Part-load motor efficiency range 8–64

Figure 8–63 Static-phase converter center-pivot irrigation system near Ellensburg, WA 8–67

Figure 8–64 Rotary-phase converter center-pivot irrigation system near Twin Falls, ID 8–67

Figure 8–65 Horsepower output of an internal combustion engine 8–69

Figure 8–66 Winter tilt angle equals latitude +15° daily total solar radiation on a tilted surface in kW/m^2/day 8–72

Figure 8–67 Example of average seasonal solar radiation values for Nowheresville, USA 8–74

Figure 8–68 Diurnal pattern of daily solar insolation 8–75

Figure 8–69 Typical farm windmill near Lubbock, TX 8–75

Figure 8–70 Wind turbine near Milford, UT 8–76

Figure 8–71 NPSH for a suction lift 8–82

Figure 8–72 Relationship between specific gravity, head, and pressure 8–86

Figure 8–73 Typical installation—single pump, circular sump 8–89

Figure 8–74 Wall and floor clearances required for propeller pumps 8–89

Figure 8–75 Typical installation – single pump, rectangular sump 8–89

Figure 8–76 Typical installation—multiple pumps, rectangular sump 8–89

Figure 8–77 Pump starter and overloads 8–90

Figure 8–78 Typical relay control circuit. 8–90

Figure 8–79 Typical contactors 8–91

Figure 8–80 Typical thermal auto reset relay 8–92

Figure 8–81 Flow limit switch 8–92

Figure 8–82 Pressure switch 8–92

Figure 8–83 Fuses installed in a control panel 8–93

Figure 8–84 Phase monitor 8–94

Figure 8–85 Typical foot valves 8–94

Figure 8–86 Constant pressure—variable flow application 8–95

Figure 8–87 Constant flows – variable pressure application 8–95

Figure 8–88 Variable pressure—variable flow application 8–96

Figure 8–89 Variable-frequency drive and pump panel near Nampa, ID 8–96

Figure 8–90 Variable frequency drive with input line filter near Kimberly, ID 8–97

Figure 8–91 Electric motor powering a turbine pump at LSU Rice Research Station near Rayne, LA 8–120

Figure 8–92 Lockout and tagging of power switch 8–122

Figure 8–93 Pump control panel near Nampa, ID 8–123

Figure 8–94 Internal combustion engine gauges 8–124

Figure 8–95 Right-angle gear drive 8–127

Figure 8–96 Belt drive with belts exposed for inspection 8–127

Figure 8–97 PTO-driven pump 8–128

Figure 8–98 Drive shaft with cover 8–129

Figure 8–99 Centrifugal pump impeller and packing 8–129

Figure 8–100 Pump packing 8–130

Figure 8–101 Oil-lubricated deep-well turbine pump near Flowell, UT 8–131

Figure 8–102 Sight-feed lubricator near Stuttgart, AR 8–132

Figure 8–103 Submersible pump inlet screen 8–133

Figure 8–104 Propeller pump with unstable foundation near St. Martin, LA 8–133

Tables

Table 8–1	Maximum design static siphon lift for water in feet (based on 70% of theoretical maximum lift Iowa Institute of Hydraulic Research)	8–20
Table 8–2	Motor speed for electric motors operating on 60-Hz electricity	8–65
Table 8–3	Approximate efficiencies of electric motors operating at full load	8–77
Table 8–4	Drive efficiency ranges	8–78
Table 8–5	Standard atmospheric pressure for different altitudes	8–82
Table 8–6	Vapor pressures of water for various temperatures	8–82
Table 8–7	Description of the components for NPSH	8–83
Table 8–8	Useful life and annual maintenance costs for pumping plant components	8–109
Table 8–9	Nebraska Pumping Plant Criteria (NPC) for energy sources	8–114
Table 8–10	Abbreviations and units	8–119
Table 8–11	Recommended regreasing periods for motors	8–122

Chapter 8 Irrigation Pumping Plants

623.0801 General

(a) Introduction to agricultural pumping plants

The first pumping plants were built 4,000 years ago in Mesopotamia and were used for irrigation. They consisted of an upright frame on which was suspended a long pole or branch at a distance of about one-fifth of its length. At the long end of this pole hung a skin bag (to form a bucket), while the short end carried a counterweight (clay, stone, or similar). When correctly balanced, the counterweight would support a half-filled bucket, so some effort was used to push an empty bucket down to the water, but only the same effort was needed to lift a full bucket. Around 200 BC, Ctesibus invented the reciprocating pump and Archimedes invented the screw pump. Much later, pumps were powered by wind and eventually steam and combustion engines.

Today, many agricultural operations rely on pumping systems for their daily operation. Pumps are used to handle water for irrigation, livestock, and drainage. In addition, confined livestock operations use pumps for wash water, wastewater transfer, and land application of liquid manure. Pump sizes for farm and ranch applications range from those requiring fractional horsepower to several hundred horsepower. This chapter focuses on pumping plants for agricultural water and wastewater, and does not include the pumps that are part of the hydraulic systems on mobile agricultural machinery.

In addition to an extensive range of sizes, pumps also come in several different types. They are classified by the way they add energy to a fluid: Rotodynamic pumps increase fluid velocity and convert this kinetic (centrifugal) energy to pressure; positive displacement pumps move a fluid by squeezing it directly. Within these classifications are many different subcategories.

Rotodynamic pumps include axial (propeller), mixed-flow, and radial types (centrifugal and turbine); positive displacement pumps include piston, screw, sliding vane, and rotary lobe types. Many factors go into determining which type of pump is suitable for an application.

Often, several different types meet the same service requirements. Pump reliability is important—often critically so. When irrigating, pump downtime can cause a substantial loss in crop production. In drainage systems, pump failure can result in flooding and catastrophic damage.

Pumps are essential to the daily operation of many farming operations. This tends to promote the practice of sizing pumps conservatively to ensure that the needs of the operation will be met under all conditions. Engineers, intent on ensuring that the pumps are large enough to meet system needs, often overlook the cost of oversizing pumps and err on the side of safety by adding more pump capacity. Unfortunately, this practice results in higher-than-necessary system operating and maintenance costs. In addition, oversized pumps typically require more frequent maintenance than properly sized pumps. Excess flow energy increases the wear and tear on system components, resulting in valve damage, piping stress, and excess system operation noise.

(b) Pumping system components

Typical pumping systems contain five basic components: pumps, pump drive, piping, valves, and end-use equipment (e.g., irrigation systems, water tanks, manure storage structures, and drainage outlets).

(1) Pumps

Although pumps are available in a wide range of types, sizes, and materials, they can be broadly classified into the two categories described earlier: rotodynamic and positive displacement. These categories relate to the manner in which the pumps add energy to the working fluid. Rotodynamic pumps work by adding kinetic energy to a fluid using a spinning impeller. As the fluid slows in the diffuser section of the pump, the kinetic energy of the fluid is converted into pressure. Positive displacement pumps pressurize fluid with a collapsing volume action, essentially squeezing an amount of fluid equal to the displacement volume of the system with each piston stroke or shaft rotation.

Although many applications can be served by either rotodynamic pumps or positive displacement pumps, a form of rotodynamic pumps called centrifugal pumps are more common because they are simple and safe to operate, require minimal maintenance, and have

characteristically long operating lives. Centrifugal pumps typically suffer less wear and require fewer part replacements than positive displacement pumps. Although the packing or mechanical seals must be replaced periodically, these tasks usually require only a minor amount of downtime. Centrifugal pumps can also operate under a broad range of conditions. The risk of catastrophic damage due to improper valve positioning is low if precautions are taken. Centrifugal pumps have a variable flow/pressure relationship. A centrifugal pump acting against a high system pressure generates less flow than it does when acting against a low system pressure.

A centrifugal pump's flow/pressure relationship is described by a performance curve that plots the flow rate as a function of head (pressure). Understanding this relationship is essential to properly sizing a pump and designing a system that performs efficiently. More information on this type of pump is described in this chapter.

Propeller pumps are also a form of rotodynamic pump. There are two types of propeller pumps, the axial-flow or screw type, and the mixed flow. The major difference between the axial-flow and the mixed-flow propeller pump is in the type of impeller (fig. 8–1).

The principal parts of a propeller pump are head, impeller, and discharge column. A shaft extends from the head down the center of the column to drive the impeller. The propeller pump has the advantage of low first cost and the capacity to deliver more water than the centrifugal pump for a given size impeller. Also, for a given change in pumping lift, the propeller pump will provide a more nearly constant flow than a centrifugal pump. The disadvantage is of the propeller pump is that it is limited to pumping against low heads.

Figure 8–1 Propeller pump impeller types

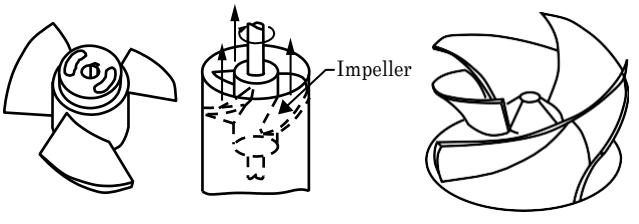

Axial flow impeller **Mixed-flow impeller**

In contrast, most positive displacement pumps have a fixed displacement volume. Consequently, the flow rates generated are also directly proportional to the speed. The pressures generated are determined by the system's resistance to this flow. Positive displacement pumps have operating advantages that make them more practical for certain applications. Positive displacement pumps are typically more appropriate for situations in which:

- working fluid is highly viscous
- system requires high-pressure, low-flow pump performance
- pump must be self-priming
- working fluid must not experience high shear forces
- flow must be metered or precisely controlled
- pump efficiency is highly valued

A disadvantage is that positive displacement pumps typically require more system safeguards, such as relief valves. A positive displacement pump can potentially overpressurize system piping and components. For example, if all the valves downstream of a pump are closed—a condition known as deadheading—system pressure will build until a relief valve lifts, a pipe or fitting ruptures, or the pump motor stalls. Although relief valves are installed to protect against such damage, relying on these devices adds an element of risk. In addition, relief valves often relieve pressure by venting system fluid, which may be a problem for systems with harmful or dangerous system fluids.

Figure 8–2 provides rough guidance for selecting a pump type based on head and flow requirements.

A booster pump is a centrifugal pump placed into an already pressurized system to increase (or boost) downstream system pressure. A saving in operating costs can sometimes be made in sprinkler irrigation by using a booster pump to provide adequate pressure for small areas that lie at elevations considerably above the principal area to be irrigated. Rather than over-

pressurizing a large area to accommodate the pressure needs of the smaller areas, the use of a booster pump for these small areas will permit the larger irrigated area to operate at a lower system pressure when irrigating both areas simultaneously. Often the end gun on a center pivot will need to operate at a higher pressure than the rest of the center pivot system. A booster pump installed near the end of a pivot lateral isolates the high pressure zone to the end gun sprinkler.

(2) Pump drives

Most pumps are driven by either electric motors or diesel, gasoline, or natural gas internal combustion engines (ICEs). Although some pumps are driven by direct current (DC) motors, the low cost and high reliability of alternating current (AC) motors make them the most common type of pump drive. In recent years, the efficiencies of many types of AC motors have improved. A section of the Energy Policy Act (EPAct) of 1992 that set minimum efficiency standards for most common types of pump motors went into effect in October 1997. The EPAct of 2005 provided additional legislation requiring improved motor efficiencies.

Figure 8–2 Pump coverage chart

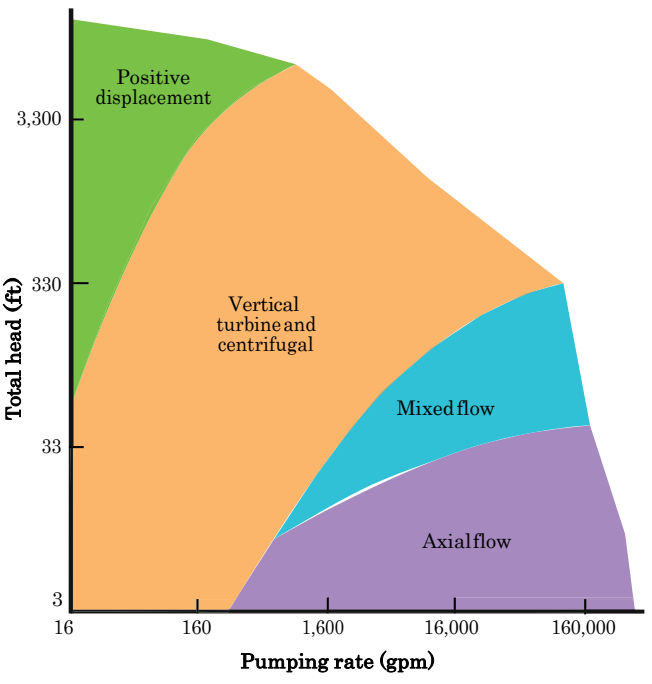

EPAct has provided end users with greater selection and availability of energy-efficient motors. In high run-time applications, improved motor efficiencies can significantly reduce operating costs. However, it is often more effective to take a systems approach that uses proper component sizing and effective maintenance practices to avoid unnecessary energy consumption.

(3) Piping

Piping is used to contain and carry the fluid from the pump to the point of use. The critical hydraulic aspects of piping are its dimensions, material type, and cost. Since all three aspects are interrelated, pipe sizing is an iterative process. In a pipe, the resistance to flow (pipe friction) at a specified flow rate decreases as the pipe diameter gets larger; however, larger pipes cost more to purchase and install than smaller pipes. For a given flow rate, smaller pipes operate at higher liquid velocity and friction head. Increased friction head increases the energy required for pumping.

(4) Valves

There are many different types of valves used for controlling flow in a pumping system. Some valves have distinct well-defined positions, either shut or open, while others can be used to throttle flow through a continuous metering action. Selecting the correct valve for an application depends on a number of factors, such as ease of maintenance, reliability, leakage tendencies, cost, and the frequency of operation.

Valves can be used to isolate equipment or regulate flow or pressure. Isolation valves are designed to seal off a part of a system for operating purposes or maintenance. Flow-regulating valves either restrict flow through a system branch (throttle valve) or allow flow around it (bypass valve). A throttle valve controls flow by increasing or decreasing the flow resistance across it. In contrast, a bypass valve allows flow to go around a system component by increasing or decreasing the flow resistance in a bypass line. Pressure-regulating valves can be used to establish a maximum pressure for safety (as with a relief valve) or to maintain a constant system operating pressure where the supply pressure is subject to fluctuation.

A check valve allows fluid to move in only one direction, thus protecting equipment from being pressurized from the wrong direction and helping to keep fluids flowing in the designed direction. Check valves are used at the discharge of many pumps to prevent flow

reversal and draining of the system when the pump is stopped. Maintaining the pipe in a full condition reduces hazards associated with subsequent refilling the pipeline during the pumping season. A foot valve is a type of check valve used on centrifugal pump suction lines to maintain the "prime" after the pump is turned off. Foot valves can satisfy the requirement to prevent reversal of flow.

(5) End-use equipment (irrigation systems, manure storage structures, drainage outlets)
The essential purpose of an agricultural pumping system is to provide water to crops, to move or land apply waste water, remove drainage water, or to provide water for livestock. Therefore, the nature of the end-use equipment is a key design consideration in determining how the piping and valves should be configured. There are many different types of end-use equipment; the fluid pressurization needs and pressure drops across this equipment vary widely. For drainage, flow is the critical performance characteristic; for irrigation systems, pressure is the key system need. Pumps and pumping system components must be sized and configured according to the needs of the end-use processes.

(c) Liquids and liquid flow characteristics

In addition to being determined by the type of system being serviced, pump requirements are influenced greatly by fluid characteristics such as viscosity, density, particulate content, vapor pressure, and corrosiveness. Viscosity is a property that measures the shear resistance of a fluid. One measure of viscosity is the Reynolds number. The Reynolds number is a dimensionless number that gives a measure of the ratio of inertial forces to viscous forces and, consequently, it quantifies the relative importance of these two types of forces for given flow conditions. Reynolds numbers are also used to characterize different flow regimes, such as laminar or turbulent flow. Laminar flow occurs at low Reynolds numbers, where viscous forces are dominant, and is characterized by smooth, constant fluid motion. Turbulent flow occurs at high Reynolds numbers and is dominated by inertial forces which tend to produce random eddies, vortices, and other flow fluctuations.

A highly viscous liquid consumes more energy during flow because its shear resistance creates heat. Some fluids, such as cow manure, are sufficiently viscous that centrifugal pumps cannot move them effectively. The range of fluid viscosities over the operating temperatures of a system is a key system design factor. A pump-motor combination that is appropriately sized for manure at a temperature of 80 degrees Fahrenheit may be undersized for operation at 32 degrees Fahrenheit.

Specific gravity is the ratio of the density of a fluid to the density of water at standard conditions. Fluids that have a higher specific gravity require more energy input for pumping compared to fluids with lower specific gravity.

The quantities and properties of particulates in a system fluid also affect pump design and selection. Some pumps can not tolerate much debris. Performance of some multistage centrifugal pumps degrades significantly if seals between stages become eroded. Other pumps are designed for use with high-particulate-content fluids. Because of the way they operate, centrifugal pumps are often used to move fluids with high particulate content, such as drainage water. Positive displacement pumps are typically used to move manure with bedding to waste storage structures. Problems will develop if the bedding is sand and is allowed to settle out in the transfer pipe causing eventual blockage. Sawdust and straw bedding can also cause blockages if an improper pump is selected. In addition, pumps typically contain seals and other components that can be damaged by the corrosiveness of the material to be pumped. If manure or wastewater is to be pumped, make sure that the selected pump is chemically compatible with those liquids. Part 651 of the National Engineering Handbook, Agricultural Waste Field Handbook (AWFH), chapter 12 contains more information about pumps used to move animal waste.

The difference between the vapor pressure of a fluid and the system pressure is another fundamental factor in pump design and selection. Accelerating a fluid to high velocities, a characteristic of centrifugal pumps, creates a drop in pressure. This drop can lower the fluid pressure to the fluid's vapor pressure or below. At this point, the fluid boils changing from a liquid to a vapor. Known as cavitation, this effect can severely impact a pump's performance. As the fluid changes phase during cavitation, tiny bubbles of water vapor

form. Since vapor takes up considerably more volume than fluid, these bubbles decrease flow through the pump. As bubbles move from the center of the impeller to the outer edge, pressure increases causing the vapor bubbles to collapse. This collapse, or implosion, causes the noise associated with cavitation and erodes the impeller material, primarily from the tips of the impeller.

(d) Pump curves

The performance of a pump is typically described by a graph plotting the pressure generated by the pump (measured in terms of head) over a range of flow rates. Figure 8–3 shows a performance curve for a typical centrifugal pump. The amount of fluid that a centrifugal pump moves depends on pump differential pressure (measured between the suction and pressure sides of the pump). The basic physics of this relationship have to do with power, which is proportional to the product of pressure and flow. Essentially, the pump converts the mechanical power of the drive unit to hydraulic power. As the pump differential pressure increases, the flow rate decreases. The rate of this decrease is a function of the pump design. Understanding this relationship is essential to designing, sourcing, and operating a centrifugal pump system. Also included on a typical pump performance curve are its efficiency and brake horsepower (bhp), both of which are plotted with respect to flow rate. The efficiency of a pump is the ratio of the pump's fluid power to the pump shaft horsepower, which, for direct-coupled pump-motor combinations, is the motor bhp.

An important characteristic of the head/flow curve is the best efficiency point (BEP). At the BEP, the pump operates most cost-effectively in terms of both energy efficiency and maintenance (fig. 8–3). Operating a pump at a point well away from its BEP may accelerate wear in bearings, mechanical seals, and other parts. In practice, it is difficult to keep a pump operating consistently at this point because systems usually have changing demands. However, keeping a pump operating within a reasonable range of its BEP lowers overall system operating costs. When selecting a pump the performance curve should be reviewed with a great amount of detail. For example the performance curve in figure 8–3 shows that a small change in head would yield a great deal of change in flow, a desirable situation in some cases. It also shows a steep bhp curve. A small change in head requires a large change in bhp usually not the most desirable trait in a pump.

Manufacturers use a coverage chart to describe the performance characteristics of a family of pumps. This type of chart, shown in figure 8–4, is useful in selecting the appropriate pump size for a particular application. The pump designation numbers refer to the pump inlet size, the pump outlet size, and the impeller size, respectively. There is significant overlap among these

Figure 8–3 Pump performance chart

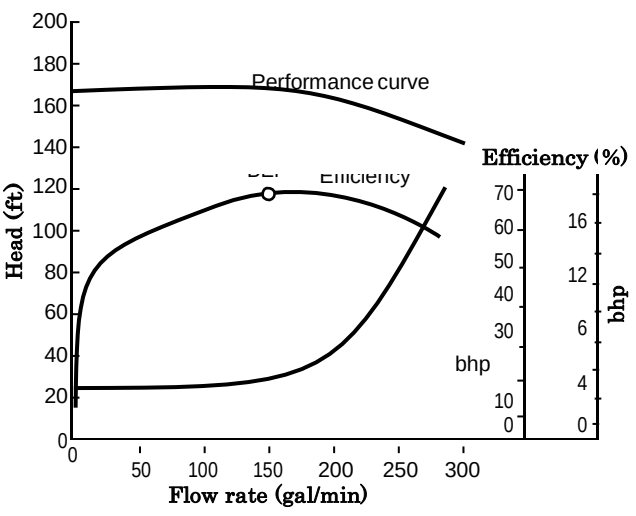

Figure 8–4 Example of a pump selection chart

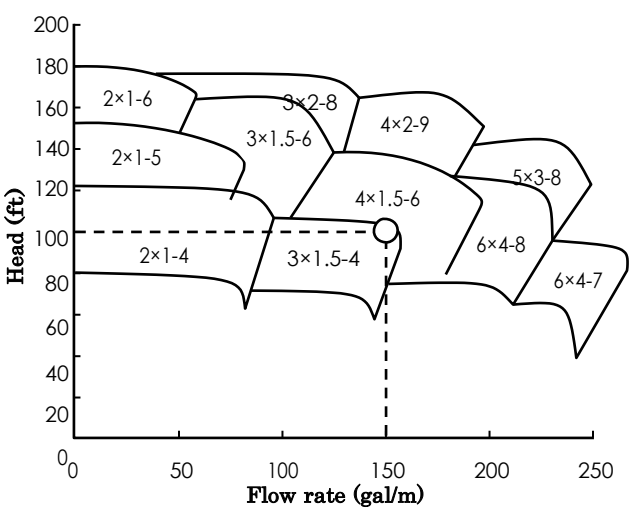

various pump sizes, which is attributable to the availability of different impeller sizes within a particular pump size.

Once a pump has been selected as roughly meeting the needs of the system, the specific performance curve for that pump must be evaluated. Often, a given pump casing can accommodate impellers of several different sizes, with each impeller having a separate, unique performance curve. Figure 8–5 displays performance curves for several impeller sizes. Also illustrated are iso-efficiency lines, which indicate how efficient the various impellers are at different flow conditions. Sizing the impeller and the pump motor is an iterative process that uses the curves shown in figure 8–5 to determine pump efficiency and performance over its anticipated operating range.

(e) Pump speed selection

Pump speed is usually an important consideration in system design. The pump speed is perhaps best determined by evaluating the effectiveness of similar pumps in other applications. In the absence of such experience, pump speed can be estimated by using a dimensionless pump performance parameter known as specific speed. Specific speed can be used in two different references: impeller specific speed and pump suction specific speed. The impeller specific speed (N_s) is used to evaluate a pump's performance using different impeller sizes and pump speeds. Specific speed is an index that, in mechanical terms, represents the impeller speed necessary to generate 1 gallon per minute at 1 foot of head. A single pump is characterized by a range of specific speeds. Equation 8–1 is for impeller specific speed at a given point on the performance curve.

$$N_s = \frac{\left(n\sqrt{Q}\right)}{H^{\frac{3}{4}}} \qquad \text{(eq. 8–1)}$$

where:

N_s = specific speed
n = pump rotational speed, r/min
Q = flow rate, gal/min
H = total head per stage, ft

For standard impellers, specific speeds range from 500 to 10,000. Pumps with specific speed values between 2,000 and 3,000 usually have the highest efficiency figure 8–6 show other pump characteristics related to specific speed.

Figure 8–5 Example of pump and efficiency curves

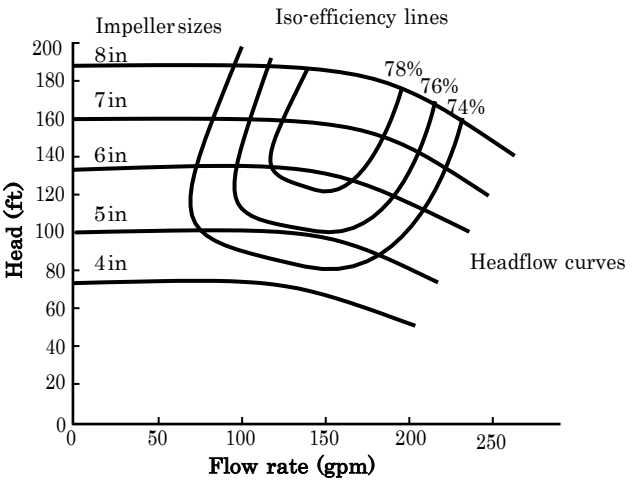

(f) Head loss

Head loss is the drop in pressure due to friction and turbulence as fluid flows through a hydraulic system. Instead of expressing this pressure in terms of force per unit area, head is expressed in terms of the height of a column of water, which creates an equivalent pressure at the bottom of the column. Head loss is thus the differential height of water that must be supplied to overcome the friction loss in the hydraulic system. Head loss in both the suction pipe and the discharge pipes can be computed using the Darcy-Weisbach or the Hazen-Williams equation. Details regarding these equations can be found in Title 210, National Engineering Handbook, Section 5, chapter 5.

In addition to pipe friction losses, there are local head losses that occur as a result of turbulence created by changes in velocity and direction of flow. Local losses are caused by pipe entrances and exits, valves, bends (elbows), tees, contractions, expansions, and obstructions. In long pipelines, the local losses may be a relatively insignificant part of the total losses and in such cases can be ignored without introducing significant error. If an estimate indicates that local losses will exceed 5 percent of the total head loss, the local

losses should be carefully evaluated and included in the flow calculations. Local losses are proportional to the square of the velocity of the flow. There will be significant local losses when flow velocities exceed 5 feet per second.

Local losses are calculated using equation 8–2:

$$h_l = K_l \frac{V^2}{2g} \qquad \text{(eq. 8–2)}$$

where:

h_l = local loss for a particular fitting, feet of head
K_l = a coefficient depending on the type of fitting, unitless
V = flow velocity through the fitting, ft/s
g = acceleration of gravity, typically 32.2 ft/s^2

Values for the coefficients (K_l) for the various fittings are in appendix 8F.

(g) Total dynamic head

Total dynamic head is essentially the equivalent height that a fluid is to be pumped, and one of the most important factors in the pump selection process. It is generally expressed in feet of water and is the summation of:

- suction pipe friction loss
- suction lift
- suction entrance loss
- discharge pipe friction loss
- velocity head
- discharge lift
- system pressure requirement
- minor fitting loss

Suction lift exists for pumps that are placed above the level of the water source. It is defined as the vertical distance in feet from the surface of the water source (during pump operation) to the centerline of the pump.

The velocity head is also called the kinetic head, and is the square of the speed of flow of a fluid divided by twice the acceleration of gravity. It is equal to the static pressure head corresponding to a pressure equal to the kinetic energy of the fluid per unit volume. In most applications, this value is small compared to the other factors and is ignored. However, it can have a significant impact in some situations such as high flow velocity or gravity flow systems.

Discharge lift is the vertical distance in feet from the centerline of the pump to the highest point in the system.

System pressure requirement is the pressure that is needed immediately upstream from the discharge point. For center pivot irrigation systems system pressure is usually given as the pressure (or head)

Figure 8–6 Pump characteristics versus specific speed

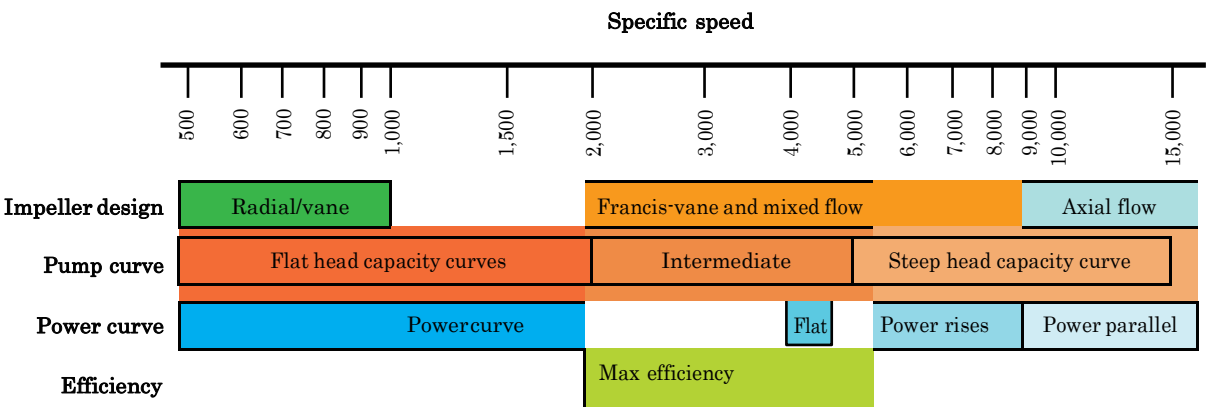

required at the top of the pivot to properly operate the system. For water discharging from a pipe to atmospheric pressure (not submerged), the head at the discharge point is the centerline of the pipe outlet. For water discharging from a submerged pipe, the vertical distance for discharge lift is measured to the water surface above the pipe. Submerged outlets may be encountered where discharge is to a stand-pipe or water-storage structure.

(h) Work accomplished by pumping

The work accomplished by a pump (per unit time) is called water horsepower and is determined by the total dynamic head (TDH), the pump discharge at that TDH, and the specific gravity of the liquid being pumped. The unit is horsepower and is defined by equation 8–3:

$$\text{whp} = \frac{(Q)(H)(SG)}{3{,}960} \qquad \text{(eq. 8–3)}$$

where:

whp = water horsepower
Q = capacity or flow, gal/min
H = total dynamic head, ft
SG = specific gravity of the liquid pumped (specific gravity for water = 1.0)
3,960 = constant to convert units to horsepower

The power required at the pump shaft to drive the pump is called bhp and is equal to the water horsepower (work per unit time achieved by the pump) divided by the pump efficiency (decimal) at the desired flow and pressure.

The overall horsepower requirement of the engine or the motor will be higher than the bhp due to the efficiency of the engine or motor and the drive efficiency. Drive efficiency can have several components: belt drive efficiency, if there is a belt drive; gear drive efficiency (if there is one); and the drive line efficiency, losses occur in universal joints and longer shafts due to the torque requirement. The efficiency of a close coupled drive is usually considered to be 100 percent. Divide the bhp by each of the above efficiency values (in percent) to determine the required drive unit power.

(i) System curves

A system curve is a graphical representation of the relationship between the flow rate and the hydraulic losses in a pumping system. System curves are used to determine the point where the pump will operate on its pump characteristic performance curve.

Pump manufacturers typically provide pump characteristic curves for their pumps. A system curve is similar to a pump characteristic curve in that it is plotted with the total system head along the y-axis and the flow rate along the x-axis. The system curve shows how the hydraulic losses (e.g. friction losses) change as the flow rate increases. It also indicates the minimum elevation lift that the pump must overcome before the system can flow.

In many cases, the pump curve shows enough information to make an informed decision on the selection of a pump for a given situation. In some irrigation systems, however, conditions change, and the pump will operate at several different points along its characteristic curve at different times. For example, the groundwater level in a well may change, or the pump could provide water to different fields at different times. In order to properly determine where on the pump curve the pump will operate, a system curve may be necessary.

(1) Types of system curves

A pump must overcome two types of head:

- elevation lift from the water source level to the highest point in the system
- hydraulic losses in the entire system due to pipe friction, including losses through fittings, valves, pressure required for sprinkler operation, etc.

The elevation lift in a system is often called static head because it does not change as the flow increases. The hydraulic losses due to pipe friction increase as the flow rate increases. Each irrigation system will have its own individual system curve, but similar systems will have similar system curves.

(2) No lift—all friction head

A system where all of the head is lost in pipe friction as the flow rate increases is shown in figure 8–7. In

this case, there is no elevation difference between the water source and the outlet of the system. As the flow rate increases, the friction loss also increases. The system curves slopes upwards because the friction loss is related to roughly the square of the flow rate. Figure 8–7 shows the system curve for a 2,000 foot, 18–inch pipeline (Hazen Williams C = 150) with no elevation lift.

(3) Mostly lift – little friction head

A system that lifts water from the water source through a short pipeline to a reservoir is an example of a system that has mostly lift and small friction losses. In this case, the system curve will be relatively flat, because even at high flow rates the friction losses are small.

Figure 8–8 shows the system curve for a 100 foot, 18 inch pipeline (Hazen Williams C = 140) with an elevation lift of 20 feet.

(4) Both lift and friction loss

The most typical type of system has both elevation lift and friction losses. Figure 8–9 shows the system curve for a 2,000 foot, 18–inch pipeline (Hazen Williams C = 150) with a 20-foot elevation lift. The system curve indicates that until the pump provides 20 feet of head, no water will flow through the system.

(5) One-point method

In systems where the operating conditions are not expected to change, a system curve is not necessary, and the one-point method of determining the pump operating condition may be used. The total dynamic head is calculated only for the desired flow rate, and the point representing the system head and flow rate is plotted. The pump selected will be one where this point is both on the pump's characteristic curve and close to the pump's best efficiency point. An example of a system where this method is appropriate is pumping from a reservoir with a constant water level to a discharge point of constant elevation and pressure.

(6) Determination of the pump's operating point

In systems where the conditions change, each of the different conditions will result in a separate system curve that can be plotted on the same graph.

In this case, both the pump characteristic curve and the different system curves must be known in order to

Figure 8–8 The system curve for a short pipeline and an elevation lift of 20 feet

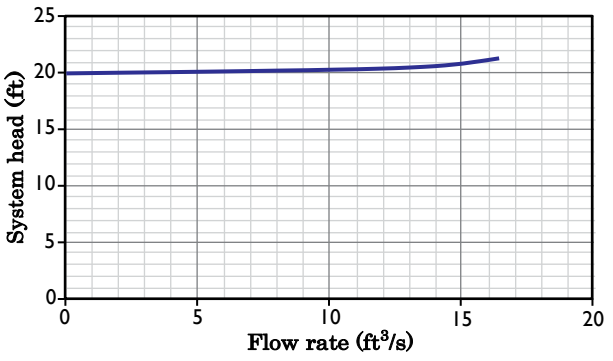

Figure 8–7 System curve for a long pipeline with no elevation lift

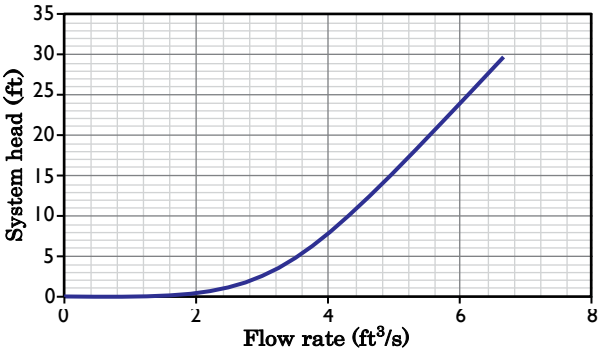

Figure 8–9 The system curve for a long pipeline and an elevation lift of 20 feet

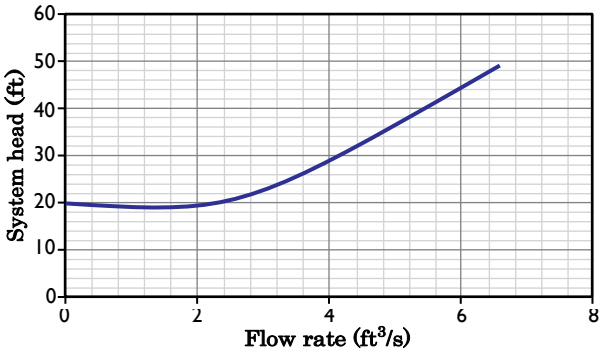

predict the flow rate and total dynamic head produced by the pump.

The operating point of a pump is the intersection of the pump curve and the system curve. For a pump with an electric power unit, and absent a variable-speed drive, the pump will have one pump curve, but the system curve will change as even seemingly minor changes are made to the irrigation system, such as the throttling of a valve. A declining water table for a well will also result in a change to the system curve.

In figure 8–10, the pump curve was obtained from the manufacturer. The system curve was developed for a specific system and plotted on the same graph. The intersection of the two curves is the operating point of the pump.

(7) Developing a system curve

The development of a system curve requires analysis of how much head the pump must produce as the flow rate changes. As the flow rate increases, the friction loss in the pipeline will increase, and the pump must provide the energy to overcome the pipe friction if the pump is to actually operate at that flow rate. The elevation lift that the pump needs to provide is also part of the system curve.

The components of the total head that must be considered at a range of flow rates include velocity head, elevation head, friction loss, and pressure head. Example 8–1 (fig. 8–11) shows the development of a system curve.

Determine the point where any pump will operate by overlaying the pump curve onto this system curve. The intersection of the two curves is the operating point of the pump.

(8) Water level drop

When the elevation of the water being pumped declines, the system curve shifts up by an amount equal to the elevation change. In figure 8–12, the water level drops 10 feet. The shape of the system curve is the same, but the curve shifts up. The pump curve will intersect the new system curve at a different point.

(9) Throttling a valve

The friction loss through a valve increases when the valve is partially closed. The additional friction loss is proportional to the velocity head. The system curves shifts increasingly upwards as the flow rate in the system increases (fig. 8–13).

Figure 8–10 System curve and pump curve

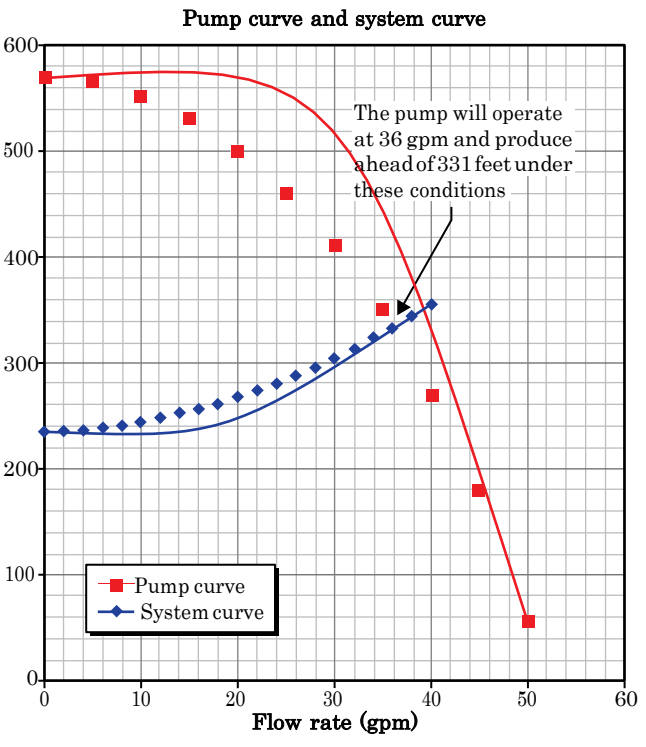

Example 8–1—Developing a system curve

Develop a system curve for an 8–inch PVC (IPS SDR= 41) pipe that is 2,000 feet long where the water lift is a total of 20 feet. The water exits the pipeline directly into a reservoir.

Solution: In this example, ignore the suction section of the system. In many cases, this may be a significant part of the system. Also ignore the minor losses due to fittings and bends in the system. 8–inch PVC: From NEH636.52, table 52C–-3, the outside diameter of an 8–inch PVC (IPS SDR=41) is 8.625 inches. The wall thickness is 0.21 inches, so the inside diameter is 8.205 inches. Using the Hazen Williams equation, we can calculate the friction loss in the pipeline. Hazen William's C factor (obtained from 210-NEH, section 5), for PVC is 150. Note that the velocity head is small.

In this particular case, because the water outlet is into a reservoir, all the pressure head that is developed at the outlet of the pump is lost to friction. There is zero pressure at the outlet because the water discharges into directly the atmosphere. The friction loss over the 2,000 feet is equal to the pressure head developed at the outlet to the pump.

All three forms of head (friction loss, elevation change and velocity head) are added together to determine the total dynamic head (TDH) for the system at each flow rate.

Flow rate vs TDH

Q (gpm)	Friction loss (ft)	Elevation change	Velocity head	TDH
0	0.0	20	0.0	20.0
400	4.6	20	0.2	29.9
600	9.6	20	0.2	2939
800	16.4	20	0.4	26.8
1000	24.8	20	0.06	38.8

TDH for a system that has a nozzle or nozzles at the end (a sprinkler irrigation system, for example) would include pressure at the nozzle. The plotted system curve for example 8–1 is shown in figure 8–11

Figure 8–11 System curve for an 8-inch PVC pipe 2,000 feet in length and with an elevation lift of 20 feet

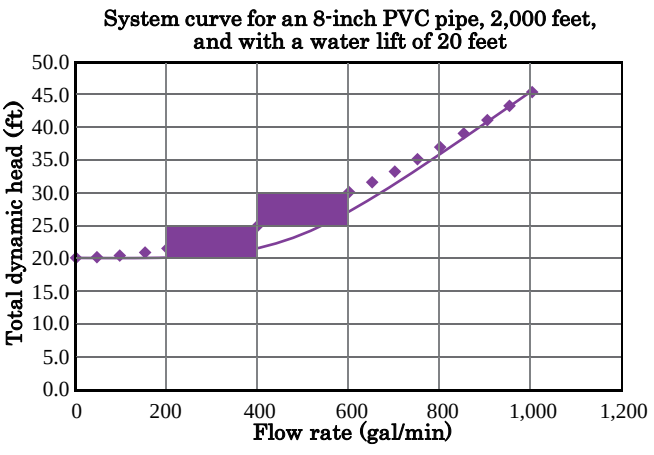

Figure 8–12 System curve shifts upwards when the water level declines

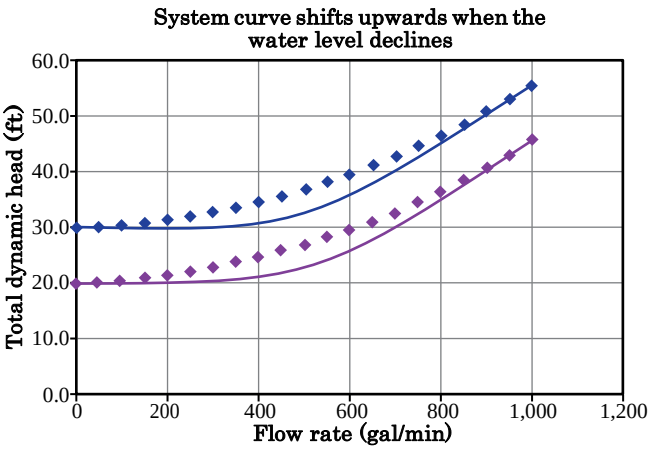

Figure 8–13 System curve change when a valve is partially closed

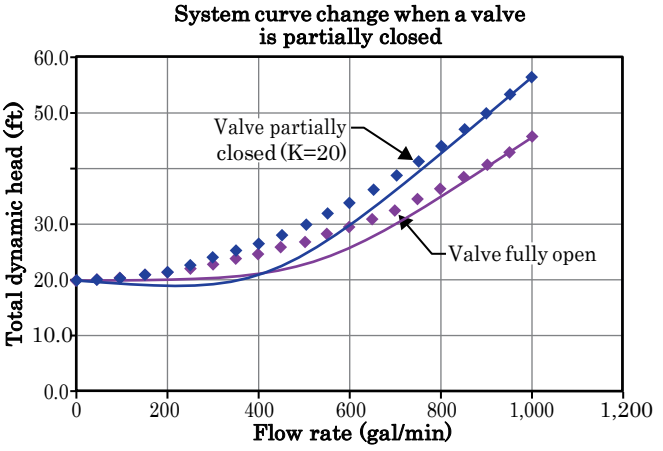

Example 8–2—Pump curve-system curve interaction

For a given pump curve, and the system from the previous example determine the change in pump performance when the lift required from a reservoir drops from 90 to 100 feet during a drought.

Solution: Plot the pump and system curves (fig. 8–14).

When the total elevation lift is 20 feet, the pump produces 600 gallons per minute in the example system. The pump produces 30 feet of total dynamic head: 20 feet for the elevation, and 10 feet of head that is used up in pipe friction. When the elevation in the reservoir drops 10 feet, the total lift of the system becomes 30 feet, and the pump produces 488 gallons per minute. The pump produces 36.7 feet of total dynamic head: 30 feet for the elevation, and 6.7 feet that is used up in pipe friction. Note that the pipe friction loss is less in the second instance because the flow rate has decreased.

Figure 8–14 Effect of a water level decline on pump output

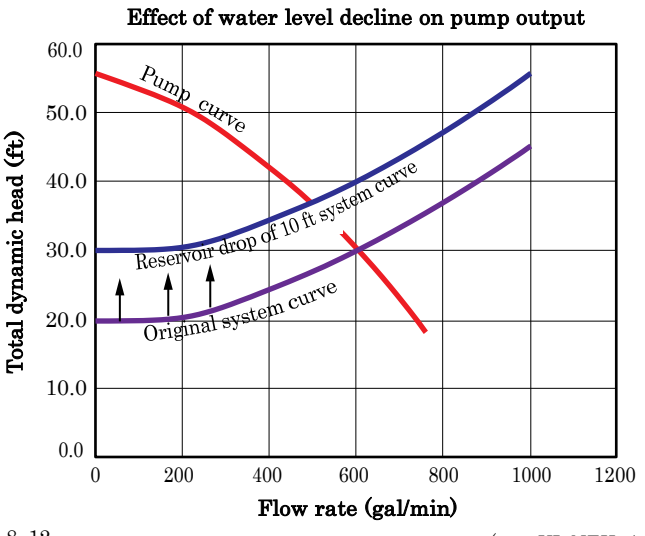

623.0802 Centrifugal pumps

(a) Centrifugal pump fundamentals

The centrifugal pump operates on the principle of centrifugal action. In a centrifugal pump, a motor or other driver rotates an impeller fitted with vanes immersed in the fluid to be pumped and enclosed in a casing. Fluid enters the case at the center and is immediately engaged by the impeller, which is in rapid rotation. This rotation causes a flow from the center of the impeller to its rim or the outside of the case where pressure head is rapidly built up. To relieve this pressure, the water escapes through the discharge pipe. The centrifugal pump will not operate until the case is entirely full of water, or primed. Even the self-priming centrifugal pump design will not "dry prime," and requires a full pump case in order to evacuate air from the suction piping. The need of priming is one of the disadvantages of the horizontal centrifugal pump.

Centrifugal pumps are built in two types: the horizontal and vertical centrifugal. The horizontal type has a vertical impeller connected to a horizontal shaft. The vertical centrifugal pump has a horizontal impeller connected to a vertical shaft.

Both types of centrifugal pumps draw water into their impellers via suction, so they must be set only a relatively few feet above the water surface. The vertical type has an advantage in that it can be lowered to the depth required to pump water and the vertical shaft extended to the surface where power is applied. The centrifugal pump is limited to pumping from reservoirs, lakes, streams, and shallow wells where the total suction lift is not more than approximately 20 feet.

The horizontal centrifugal pump, illustrated in figure 8–15, is the one most commonly used in irrigation. It costs less, is easier to install, and more accessible for inspection and maintenance. However, it requires more space than the vertical type. The horizontal type can be installed in a pit to keep the suction lift within operating limits, but it usually is not feasible to construct pits or vaults more than about 10 or 15 feet deep. Electrically driven pumps are best for pit installations because the least cross-sectional area is required. Pit installations may require drainage and ventilation. Centrifugal pumps will leak water to lubricate the bearings, and that water needs to be removed from the vault or a dangerous low oxygen condition may develop. A backflow check valve is also needed where there is potential for reverse flow in the drain line.

The vertical centrifugal pump may be submerged or exposed. The exposed pump is set in a watertight sump at an elevation that will accommodate the suction lift. The submerged pump is set so the impeller and suction entrance are under water at all times. Thus, it does not require priming. But maintenance costs may be high as it is not convenient to give the shaft bearings the best attention. Pumps of this kind usually are restricted to pumping heads of about 50 feet.

(b) Principal characteristics of centrifugal pumps

Centrifugal pumps are variable displacement type. They are widely used because of their simplicity and range of capacities. These pumps have a power shaft with an attached impeller that rotates inside an enclosed housing. Fluid enters the housing near the center of the impeller and is forced outward by the rotation of the curved impeller blades (fig. 8–16). The higher velocity at the outer end of the blades and low pressure at the impeller center cause the fluid to flow.

As the outward movement of water across and around the impeller (slippage) increases and further lowers efficiency, the pump operating pressure is increased. Pumping capacity, pressure, and power needs depend on design and construction of the impeller, enclosure, and inlet and outlet.

A closed impeller is efficient with liquid waste, but plugging with tough, stringy solids and chunks can be troublesome. A closed impeller pump is useful for high-pressure irrigation or recirculating liquid for flushing. A semi open or open impeller is less efficient, but is also less prone to plugging and is able to handle semisolids. Although generally inefficient, a sloped and curved, semi open impeller design minimizes cavitation and solids plugging.

Figure 8–15 Horizontal centrifugal pump for surface or pit installation

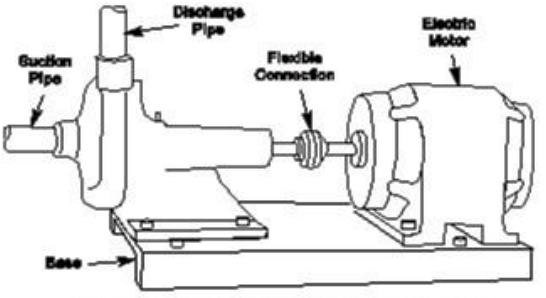

DIRECT CONNECTED HORIZONTAL CENTRIFUGAL PUMP
(INTERNAL COMBUSTION OR ELECTRIC MOTOR MAY BE USED)

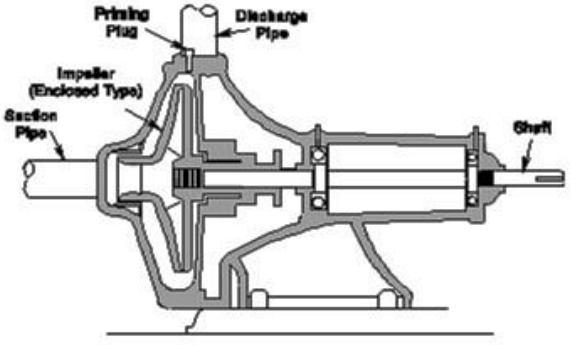

CROSS SECTION OF MODERN HORIZONTAL CENTRIFUGAL PUMP
(SINGLE SUCTION ENCLOSED IMPELLER)

Figure 8–16 Impeller types commonly used with centrifugal pumps

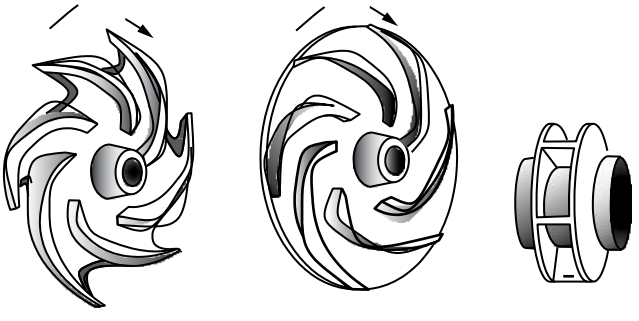

Open impeller | Semi open impeller | Closed impeller

Established pump manufacturers design, develop, test, and manufacture a variety of centrifugal pumps for most uses. Models vary by size, impeller type and clearance, pump inlet and outlet, bearing seals, and drive arrangement. The principal characteristics of a centrifugal pump are:

- Smooth, even flow
- Easy on pump, motor, piping, and foundation
- Adapted to high-speed operation and to different speeds
- Nonoverloading of power unit with increased heads but there may be some danger of overloading if head is decreased such as at start up where a pump maybe allowed to pump out of control and off the curve.
- Capacity and head depend upon pump revolutions per minute (r/min) and impeller diameter and width. In a given pump, the capacity and head will vary according to the individual operating characteristics of that pump; that is, an increase in head reduces the capacity and vice versa.
- Horsepower is a function of capacity, head, and pump efficiency.
- When the speed is kept constant, capacity decreases as head increases and power is reduced. Likewise, when the head is reduced, capacity increases and power goes up;
- When the operating speed is changed (fig. 8–17), the capacity will change in direct proportion to the variation in speed. Note that the efficiency curve remains the same with the increase in pump speed at the same time, the head will vary as a square of the change in speed while horsepower will change as the cube of the change in speed. This is represented by the following formula (variation in impeller speed with constant impeller diameter):

$$\frac{rpm_1}{rpm_2} = \frac{Q_1}{Q_2} = \frac{\sqrt{h_1}}{\sqrt{h_2}} = \frac{\sqrt[3]{bhp_1}}{\sqrt[3]{bhp_2}} \qquad \text{(eq. 8–4)}$$

where:
r/min = pump speed, r/min
Q = pump capacity, gal/min
h = head, ft
bhp = brake horsepower

- When it is necessary to vary the characteristics of a pump operation at constant speed, the same relationships hold true, except changes that are related to the change in impeller diameter. Then capacity varies directly with the diameter; the head varies as a square of the diameter; and the horsepower varies as a cube of the diameter. This is expressed by the following formula (variation in impeller diameter with constant impeller speed):

$$\frac{d_1}{d_2} = \frac{Q_1}{Q_2} = \frac{\sqrt{h_1}}{\sqrt{h_2}} = \frac{\sqrt[3]{bhp_1}}{\sqrt[3]{bhp_2}} \qquad \text{(eq. 8–5)}$$

where:
d = impeller diameter, in

- Both relationships, (eqs. 8–4 and 8–5), are known as the Affinity Laws. These changes described take place with little or no change in efficiency for small changes in speed and impeller diameter (maximum increase of speeds of about 5%). Example 8–3 shows how to develop a new pump

Figure 8–17 Effect of speed change on centrifugal pump performance

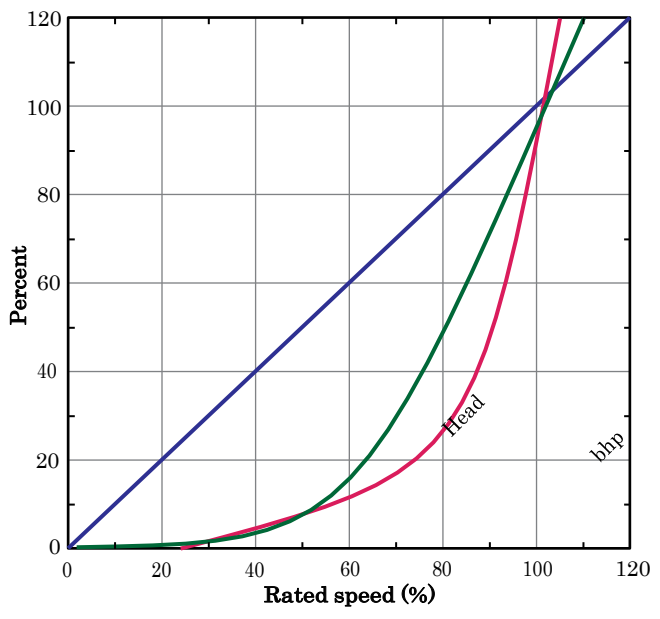

Example 8–3—Developing a new pump curve using the affinity laws

Find:

Pump performance curves for a pump operating at 3,600 revolutions per minute is shown in figure 8–18. Obtain new pump performance curves when the operating speed is increased to 4,000 revolutions per minute.

Solution:

- Based on the performance curves shown in figure 8–18, the performance at a speed of 3,600 revolutions per minute is determined as:

Q (gal/min)	H (ft)	Efficiency (%)	Brake horsepower (bhp)
0	350	0	25
100	349	28	30
200	347	48	36
300	338	62	42
400	325	71	47
500	300	73	51
600	258	72	53
650	235	71	52

- Calculate correction factors for the discharge, head, and bhp, respectively using equation 8–4:

$$Q_2 = Q_1 \times \left(\frac{4{,}000}{3{,}600}\right) = 1.111\ (Q_1)$$

$$H_2 = H_1 \times \left(\frac{4{,}000}{3{,}600}\right)^2 = 1.235\ (H_1)$$

$$bhp_2 = bhp_1 \times \left(\frac{4{,}000}{3{,}600}\right)^3 = 1.372\ (bhp_1)$$

- Then the performance at a speed of 4,000 revolutions per minute is determined as:

Q (gal/min)	H (ft)	Efficiency (%)	Brake horsepower (bhp)
0	432	0	34
111	431	28	41
222	428	48	49
333	417	62	58
444	401	71	65
556	370	73	70
667	319	72	72
722	290	71	72

- The results are plotted on figure 8–18. For this example, the efficiency remains the same with the increase in pump speed.

Figure 8–18 Example of the application of the affinity law to obtain new pump characteristics curves when the pump speed is changed

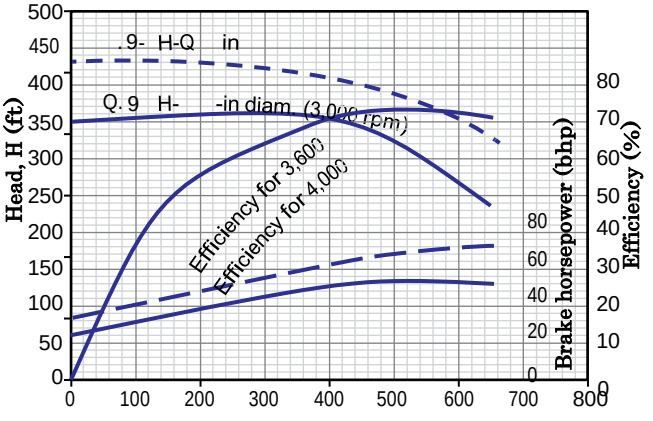

diam. (4,000 rpm)

bhp (4,000 rpm)

bhp (3,600 rpm)

Discharge capacity, Q (gal/min)

curve using the affinity laws. For large changes in speed or impeller diameter, the efficiency will likely be reduced. The pump manufacturer should be contacted for details.

(c) Pump characteristic curves

For a particular job, the best selection of a pump will be one that will operate at its peak efficiency. Unfortunately, this is rarely possible for there is only one capacity and one head condition for each pump where the highest efficiency is obtained. Because it is obviously impossible for any manufacturer to design and build the many pumps required to meet all operating conditions, manufacturers have settled upon standard designs for required head and capacity ranges. A well-designed and integrated line of pumps will be so arranged that it is possible to select some pump from the line for any condition and obtain an efficiency that is within a few percentage points of the maximum. Characteristic curves are available and should be used to select the best pump for the particular job.

These curves are developed at the factory after exhaustive tests during which the water flow capacity, pressure, power input, etc., are carefully measured and plotted on a curve.

A full set of characteristic curves includes, in addition to the head-capacity curve for different speeds, an efficiency curve and a horsepower curve (fig. 8–19). The head-capacity curve for the constant speed of the pump represents the variation in head with respect to the flow rate of water delivered by the pump. Head-capacity curves for different, recommended speeds of the pump are shown. The horsepower curve shows the amount of power required to drive the pump. The efficiency curve shows the amount of usable work done by the pump in percent of power delivered to the pump shaft. Efficiencies may be determined for any given head, speed, and capacity. The highest efficiencies pump should be selected. Pumps of identical design will have practically identical characteristics with only slight differences due to unavoidable manufacturing variations. See example 8–4 for procedure on how to select a pump using pump curves.

(1) Pumps in parallel

Head-discharge curves can be developed for parallel and series operation of centrifugal pumps to satisfy a wide range of service requirements. A combined head-discharge curve can be developed for parallel operation of two or more pumps by adding horizontally the capacities of the same heads in which a static

Figure 8–19 Typical characteristic curves for horizontal centrifugal pump

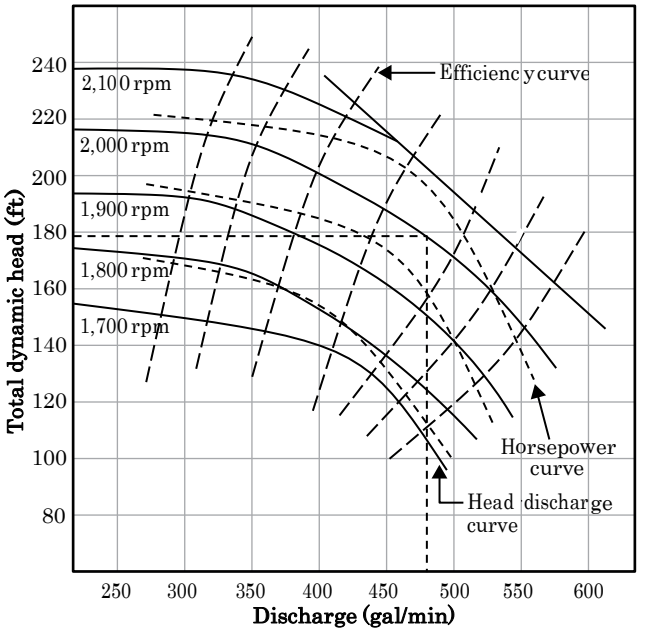

Figure 8–20 Head-discharge relationships for parallel and series operations

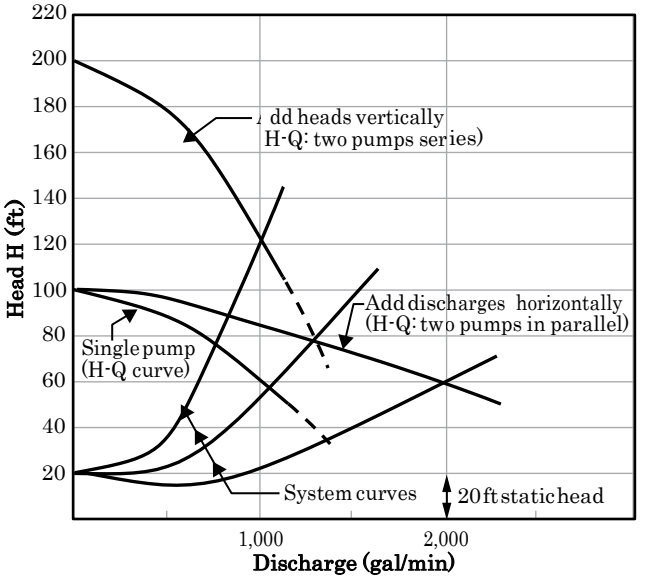

head of 20 feet is assumed to be available. In figure 8–20, a single centrifugal pump which delivers 1,000 gallons per minute at 60 feet of head is considered. Two pumps in parallel operation will deliver 2,000 gallons per minute at 60 feet of head. But also shown is the effect of the system curve. The middle curve is the original system curve and the actual flow rate for parallel pumps would be somewhat less than double at 1,200 gallons per minute. The system curve would have to be changed (e.g. larger pipe, less restriction, etc.) matching the bottom curve, doubling the flow. Several other factors come into play when operating parallel pump. These include stable versus nonstable H/Q curves, nonidentical pumps, and various methods of variable frequency drives (VFD) control.

An unstable pump curve is one that the head actually decreases as the pump approaches shut off. This theoretically could allow the pump to oscillate between higher and lower flows as changes in the system occur. Although pumps with unstable curves can work well in many applications, they are not suited for operation in parallel. If the primary pump is operating at a head that is higher than shut off, the secondary pump may not be able to produce enough head to come online. This is especially true for larger pumps that may be started against a closed valve (Evans 2008).

When two pumps with unequal flows, but having the same shutoff heads are use, each will contribute to the combined flow rate based on their individual flows at a particular head. The trouble occurs when two pumps of unequal head and flow rate are operated in parallel one or the other of the pumps may not be able to contribute. In most cases, it is recommended against using pumps with unequal shut off head and flows in parallel. If used, detail must be given to proper starting sequence and system curves. The object is to allow both pumps to operate at or near their best efficiency point (BEP) (Evans 2008).

When a VFD is used to control parallel pumps there are three basic configurations. A single drive may be used to control both pumps. Both pumps would run at identical speeds and any changes to the system conditions would create identical results with each pump. This works best when the required flow rate is never lower than the capacity of a single pump.

Another option is to have the VFD control just the primary pump. If the flow or head requirements for the primary pump are exceeded, the secondary pump comes on line at full speed and the VFD adjusts the primary pump accordingly to maintain the required conditions. The main advantage of this arrangement is a lower initial cost, which may be nullified by the disadvantages of additional safety equipment and potential lower operating efficiencies of the primary pump.

The third condition is more complex, and that is to have each individual pump control by a separate VFD. This requires a sophisticated control scheme allowing communications between the two drives. One pump can be operated by itself until its capacity is exceeded then the other pump is brought on line to meet the new requirements. This arrangement has great flexibility as to system conditions (Evans, 2008).

There may be times when the combined efficiency curve for two pumps in parallel needs to be determined. It can be calculated by using equation 8–6:

$$\text{Eff} = \frac{\left(Q_b + Q_a\right) H}{3{,}960\left(\text{Bhp at } Q_b + \text{Bhp at } Q_a\right)} \qquad \text{(eq. 8–6)}$$

(2) Pumps in series

Pumps are frequently operated in series to supply head greater than either pump can supply on its own. Booster pumps fall in to this category, where one pump is used to booster the pressure of the main pump. Two pumps are connected in series if the discharge of one pump is connected to the suction side of the second pump. Identical pumps in series will operate in much the same manner as a two (multiple) stage centrifugal pump. The planning procedure for series pumps is similar to that involved with parallel pumps. For pumps operating in series a combined head-discharge curve can be developed by vertically adding the heads at the same capacities. In figure 8–20, the two pumps operated in series will deliver 1,000 gallons per minute at 120 feet of head. As with parallel pumps, the resultant flow rate and head are somewhat dependent on the system curve. If the flow and head were not controlled, the system would stabilize along the original system curve at ~1,300 gallons per minute and 80 feet of head. If the flow rate was fixed at 1,000 gallons per minute, the system would develop a new system curve (the upper system curve), and the flow would be 1,000 gallons per minute at 120 feet of head.

There are several points to consider when using pumps in series. If the first pump can not supply enough liquid to the second pump, there is a high potential for cavitation problems. For this reason, both pumps must have the same width impeller. The pumps will need to run at the same speed for the same reason (avoid potential for cavitation).

The second pump will need to be able to handle the higher pressure and may require high-pressure mechanical seals, packing, higher strength material, ribbing, or extra bolting.

Both pumps will need to be filled with liquid before startup and operation. The second pump should never be start until after the first pump is started.

There may be times when the combined efficiency curve for two pumps in series needs to be determined. It can be calculated by using equation 8–7:

$$\text{Eff} = \frac{Q\left(H_a + H_b\right)}{3{,}960\left(\text{Bhp at } H_a + \text{Bhp at } H_b\right)} \qquad \text{(eq. 8–7)}$$

(3) Definition of total dynamic suction lift and total dynamic head

In determining head for centrifugal pumps, it is necessary to calculate the TDH considering both the suction and discharge sides of the pump. Therefore, the TDH is equal to the total dynamic suction lift plus the total dynamic discharge head less suction velocity head as shown in equation 8–8.

$$\text{TDH} = h_l + h_d - h_s \qquad \text{(eq. 8–8)}$$

where:
TDH = total dynamic head, ft
h_l = total dynamic suction lift, ft
h_d = total dynamic discharge head, ft
h_s = suction velocity head, ft

Atmospheric pressure determines the maximum practical suction lift. Atmospheric pressure not only varies with altitude and temperature, but also varies with weather conditions. As the pressure on the water at sea level is one atmosphere or 34 feet, the highest theoretical suction lift for pure water at sea level is 34 feet less friction losses. This maximum theoretical suction lift can not be obtained under actual conditions. Pump manufacturers usually recommend that the design suction lift be limited to 70 percent of its theoretical value.

The computed dynamic suction lift must not be more than the maximum design static siphon lift. If a suction lift is greater than the maximum design static siphon lift, the system will not operate properly under designed conditions. The discharge will drop below the required amount to a point where friction and velocity head are sufficiently decreased. When this condition

Example 8–4—Selecting a pump curve

Given:
Using figure 8–19, find a centrifugal pump and power unit capable of delivering 480 gallons per minute at 180 feet of total dynamic head (TDH).

Find:
Pump curve that satisfies the flow head requirements at the high efficiency.

Solution:
Select a pump that will operate near its highest efficiency most of the time. The pump represented by curves shown in figure 8–19 will satisfy this condition. Find 180 feet of TDH on the vertical axis; follow the dotted line to its intersection with the 480 gallons per minute line extending up from the horizontal axis. The intersection of the vertical and horizontal dotted lines indicates that this pump will be satisfactory if operated at 2,000 r/min. It will then operate at its highest efficiency of 73 percent and will require a power unit capable of producing 30 horsepower or greater to the pump shaft at 2,000 r/min.

exists, the static lift should be decreased or a larger suction pipe used to decrease the friction loss. Table 8–1 gives the maximum design static siphon lift based on altitude and water temperature.

Total dynamic suction lift is composed of these factors (fig. 8–21):

- static suction lift (actual vertical distance of center of pump above lowest water surface after pumping begins)
- friction head in suction pipelines
- head losses in elbows, strainers, foot valves, and other accessories
- velocity head

All losses on the discharge side of the pump must be accurately computed. The total dynamic discharge head is composed of these factors (fig. 8–21):

- Static discharge head, which is the actual vertical distance measured from the centerline of the pump to the centerline of the pipe at the discharge end, or to the surface of the water at the discharge pool, whichever is greater.

Table 8–1 Maximum design static siphon lift for water in feet (based on 70% of theoretical maximum lift Iowa Institute of Hydraulic Research)

Altitude (ft)	Temperature (°F)				
	60	70	80	90	100
0	23.4	23.2	23.0	22.6	22.2
500	23.0	22.8	22.5	22.2	21.8
1,000	22.4	22.3	22.0	21.8	21.4
1,500	22.0	21.9	21.6	21.4	20.9
2,000	21.6	21.5	21.2	20.9	20.5
3,000	20.8	20.6	20.4	20.1	19.7
4,000	20.0	19.9	19.6	19.3	18.9
5,000	19.2	19.1	18.8	18.6	18.1
6,000	18.5	18.3	18.1	17.8	17.4
7,000	17.8	17.6	17.4	17.1	16..7
8,000	17.1	16.9	16.7	16.4	16.0

- Friction head in the pipeline. (For sprinkler systems, the laterals are not included—only the main and supply line.)
- Friction head developed in the elbows, reducers, valves, and other accessories.
- Velocity head at end of discharge pipe.
- Pressure required at end of line. For sprinkler systems, this is the pressure required to operate the lateral, and includes all of the pressure losses expected in the lateral, sprinklers, valves, etc. When the system is designed to discharge freely into a ditch or reservoir, no additional pressure is required at the end of the line.

(d) Data for selecting pump

This information is usually needed by the pump manufacturer to furnish the correct size and type of centrifugal pump for a particular installation (fig. 8–22). See example 8–5 for procedure of calculating TDH.

(e) Installation

For a centrifugal pump to continue to operate at its designed efficiency, and also to prolong the life of the equipment, the pump should be correctly located, have a good foundation, and be properly aligned. These factors should be considered in locating the pump:

- It should be easily accessible both for inspection and maintenance.
- It should be covered to protect it from the elements. In the case of a pump house, adequate headroom should be provided for servicing the equipment.
- It should be safeguarded against flood conditions unless a wet pit-type pump is used.
- It should be placed as close as possible to the water supply so as to make the suction line short and direct.

Pumping units that are to be installed in a permanent location provide the opportunity for developing the best type of foundation (fig. 8–23). Concrete is the best material for constructing a good pump foundation. The pump unit should be securely fastened to the

Figure 8–21 Layout of centrifugal pumping system used in determining TDH

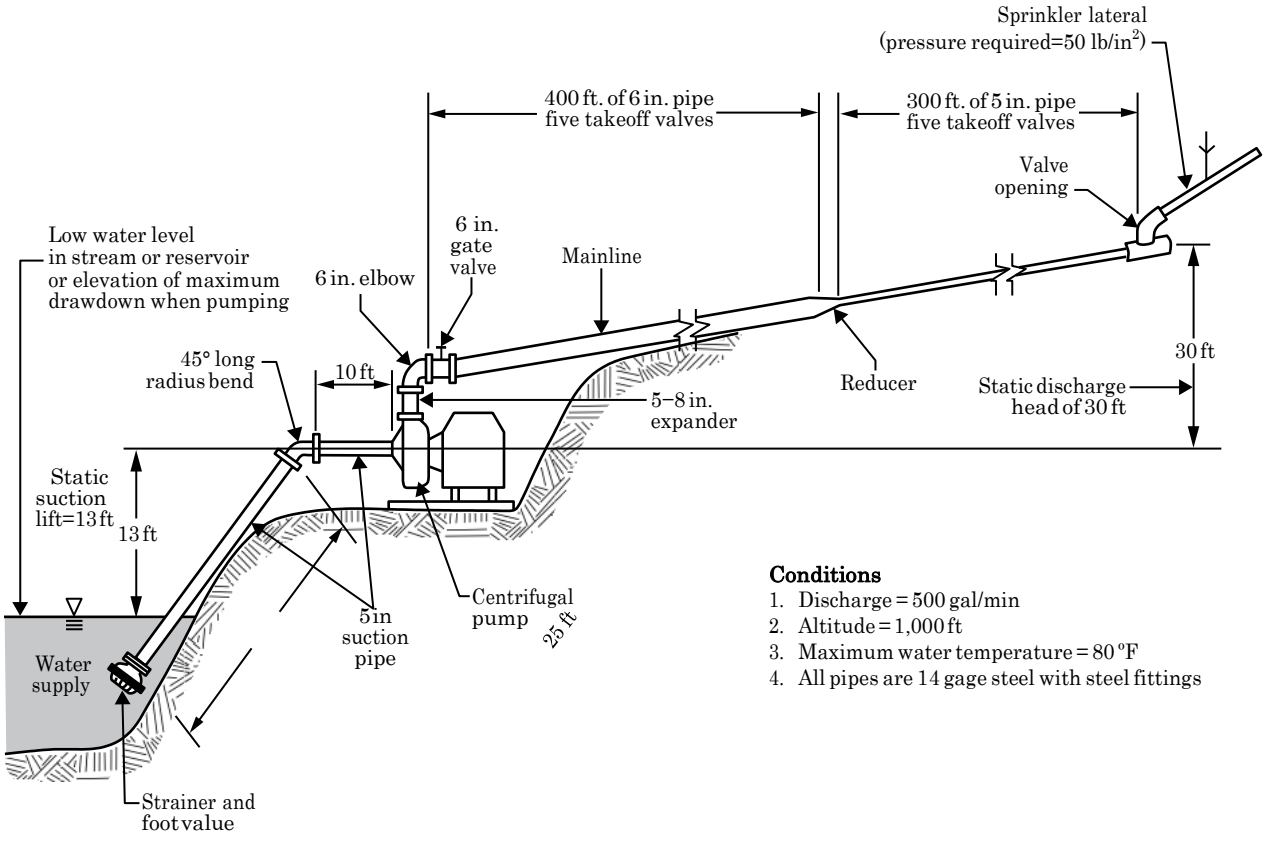

Figure 8–22 Data sheet for selecting a centrifugal pump

Source of water supply: _____

Total dynamic suction lift: _____(ft)

Foot valve and strainer: ☐ Yes ☐ No

Total dynamic head required: _____ (ft)

Discharge capacity of pump: _____ (gal/min)

Pump location: ☐ Movable ☐ Permanent

Type of driver: ☐ Electric _____Voltage _____Phase _____Cycles (Hz)

☐ Gasoline

☐ Diesel

☐ Power takeoff

☐ Natural or L.P. gas

Power unit ☐ Separate from pump

☐ Combined with pump

Example 8–5—Calculating TDH for a centrifugal pump

Given:
An irrigation pumping system using a centrifugal pump is designed for the layout shown in figure 8–21. The pump discharge is 500 gallons per minute and is located at an altitude of 1,000 feet. The maximum water temperature is 80 degrees Fahrenheit, and all pipes are 14-gage steel with steel fittings.

Find:
The total dynamic suction lift and the total dynamic head.

Solution:
Calculate the total dynamic suction lift:

Static suction lift: 13.00

Using the Hazen-Williams equation, calculate the friction loss through the pipelines using C factor of 120:

pipe length = (25+10) = 35 ft

35 feet of 5-inch pipe at 500 gallons per minute:

35×0.0582 2.04

Find the velocity and friction head in fittings by convert the flow rate from gallons per minute to cubic feet per second using the conversion factor of 2.228×10^{-3} (ft^3/s/gal/min):

$$V = \frac{Q}{A} = \frac{500 \times 2.228 \times 10^{-3}}{\left(\frac{\pi}{4}\right)\left(\frac{5}{12}\right)^2} = 8.17 \text{ ft/s}$$

5-in. 45 degree long-radius bend: $h_f = K\frac{V^2}{2g} = 0.18 \times 1.04$ 0.19

(K values found in appendix 8F)

Foot valve: $h_f = K\frac{V^2}{2g} = 0.8 \times 1.04$ 0.83

Strainer: $h_f = K\frac{V^2}{2g} = 0.95 \times 1.04$ 0.99

Velocity head: $\frac{V^2}{2g} = \frac{8.17^2}{(2 \times 32.2)}$ 1.04

Total suction lift (ft): 18.09

Example 8–5—Calculating TDH for a centrifugal pump—continued

According to table 8–3, the maximum design static siphon lift at altitude of 1,000 feet with water temperature of 80 degrees Fahrenheit is 22.0 feet; therefore, the pumping system as designed is within the limit of practical suction lift.

The total dynamic discharge head is calculated:	ft
Static discharge head:	30.00
Friction head in pipe lines (H–W equation, C=120):	
400 ft of 6-in. pipe = 400 × 0.024	9.58
300 ft of 5-in. pipe = 300x0.0582	17.46
Friction head in fittings: (K values from appendix 8F)	
One 5-in. to 6-in. expansion: $h_f = K\frac{V^2}{2g} = 0.10 \times 1.04$	0.10
One 6-in. standard 90° elbow: $h_f = K\frac{V^2}{2g} = 0.28 \times 0.50$	0.14
One 6-in. gate valve open: $h_f = K\frac{V^2}{2g} = 0.09 \times 0.50$	0.05
Five 6-in. takeoff valves: 0.09 × 0.50 × 5	0.23
Five 5-in. takeoff valves: 0.11 × 1.04 × 5	0.57
One sprinkler hydrant valve and elbow: $h_f = K\frac{V^2}{2g} = 8 \times 1.04$	8.32
One 6-in. to 5-in. reducer: $h_f = K\frac{V_2}{2g} = 0.07 \times 1.04$	0.07
Velocity head at the end of the discharge pipe: $\frac{V^2}{2g} = \frac{8.17^2}{(2 \times 32.2)}$	1.04
Pressure required to operate the sprinkler lateral: 50 lb/in^2 × 2.307	115.35
Total discharge head (ft)	**182.91**

Total dynamic head = Total dynamic suction lift + Total dynamic discharge head – Suction velocity head

= 18.09 + 182.91 – 1.04

= **199.96 ft**

foundation. The recommended method of setting the foundation bolt is shown. The coupling between the pump and power unit must be in correct alignment regardless of the type of coupling. Figure 8–23 shows how a coupling can be checked for alignment with a steel straight edge. When the coupling is by a shaft and double universal joint, a shield should be placed over and around the two horizontal sides to protect the operator from the fast-moving shaft.

The pump must be at a level position at all times to operate properly. Figure 8–23 shows how four to six wedges can be used to raise the entire pumping unit about three-quarter inch above the foundation. The wedges can then be adjusted as necessary to bring the pump into a level position. After the pump has been leveled, a form should be built at least two and one-half inches high around the base plate; concrete is then poured to fill in the gap between the pump and foundation and allowed to harden thoroughly. The wedges may be left in place. When the concrete is hardened, the foundation bolt should be tightened and the alignment rechecked. If there is any misalignment, it can be corrected by placing shims under the pump, motor, or brackets.

The motor should now be checked to see if it rotates in the proper direction. The rotation of the motor must be in the same direction as the arrows on the pump casting. If the rotation is in the wrong direction, the wiring is probably incorrect.

The pumps must line up naturally with their power unit and piping. Pipes should not be forced into place with flange bolts as this may draw the pump out of alignment (fig. 8–24). Suction and discharge pipelines should be supported independently of the pump so as not to put any strain on the pump casing.

The suction pipe, particularly in the case of long intake pipes and high suction lifts, should be laid with a uniform slope, upward from the source of water to the pump. There should be no high spots where air can collect and cause the pump to lose its prime. The inlet end of the suction pipe should be suspended above the earth bottom of a stream or pond or laid in a sump made of concrete or metal. On horizontal suction lines where a reducer is used, the reducer should be of the eccentric type with the straight section on the upper side of the line and the tapered section on the bottom side (fig. 8–25).

Figure 8–23 Suggestions for installing centrifugal pumps

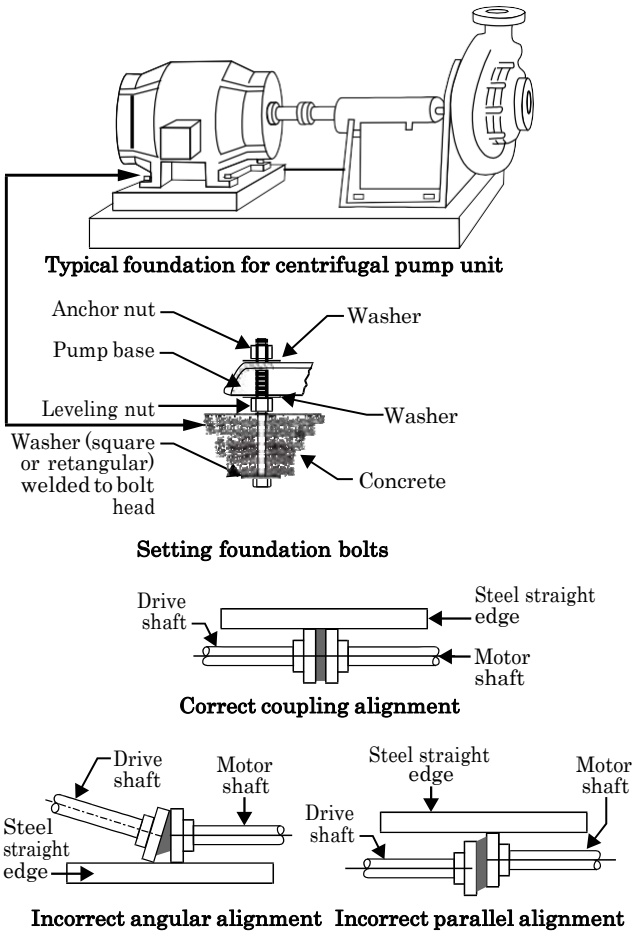

Figure 8–24 Examples of bad pump and pipe alignment *(courtesy of Cornell Pump Company)*

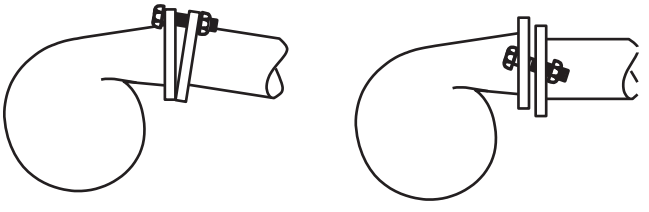

Air may enter the suction pipe entrained in the water, or by means of whirlpools (or vortex) that form in the sump when the water velocity is too high in the intake pipe, if the water level in the sump is too low, or the inlet nozzle is not sufficiently submerged. This generally can be overcome by using a larger suction pipe, especially if the pipe is flared. In shallow water, a mat or float located above the suction inlet will reduce the vortex (fig. 8–26). Pipe sizes should be increased until the water velocity is less than 3 feet per second at the entrance. More information on submergence depth is found in American Society of Agricultural Engineers EP369.1 DEC1987 (R2010), Design of Agricultural Drainage Pumping Plants.

A stream of water falling into the sump near the intake pipe will churn air into the water and cause trouble in the suction line. This can be overcome by extending the suction line deeper into the water or by installing a baffle as shown in figure 8–27.

When water must be pumped from a well or a sump of small cross-sectional area, the water will tend to rotate, and this will interfere with the flow into the suction line. This is particularly true in cylindrical sumps or wells. A baffle placed on opposite sides of the suction pipe and at a right angle to the rotation of the water overcomes this trouble. Also, offsetting the pump intake from the center of a circular sump will reduce rotation.

A short elbow should never be bolted directly to the suction opening of a pump. Having such a sharp bend so near the pump inlet causes a disturbance in the water flow and may result in noisy operation, loss of efficiency, and heavy end thrusts. This is particularly true when the suction lift is high. If it is necessary to make a bend in the suction line, it should be in the form of a long sweep or long radius elbow and should be placed as far away from the pump as practicable.

Screens or strainers should be used to exclude debris from the suction line. If the source of water contains large amounts of small debris, a screen should be placed around or in front of the inlet. The screen should be placed 2 or 3 feet from the suction inlet to provide good protection and be less likely to clog. Strainers, on the other hand, are generally small and are fastened to the end of the suction pipe. They are only satisfactory in relatively clear water (fig. 8–28). For more on screens see appendix 8B.

Figure 8–25 Proper suction pipe and pump installation *(courtesy Cornell Pump Company)*

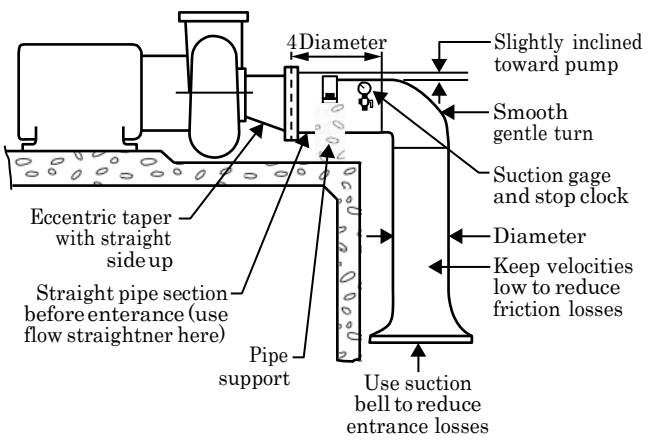

Figure 8–26 Vortex and air entrainment prevention *(courtesy Cornell Pump Company)*

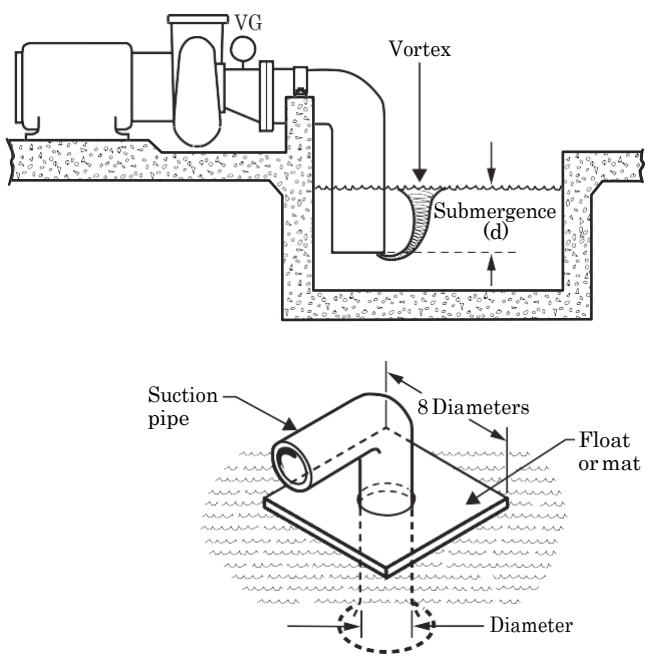

Figure 8–27 Pump station design to prevent air entrainment from cascading water *(courtesy of Cornell Pump Company)*

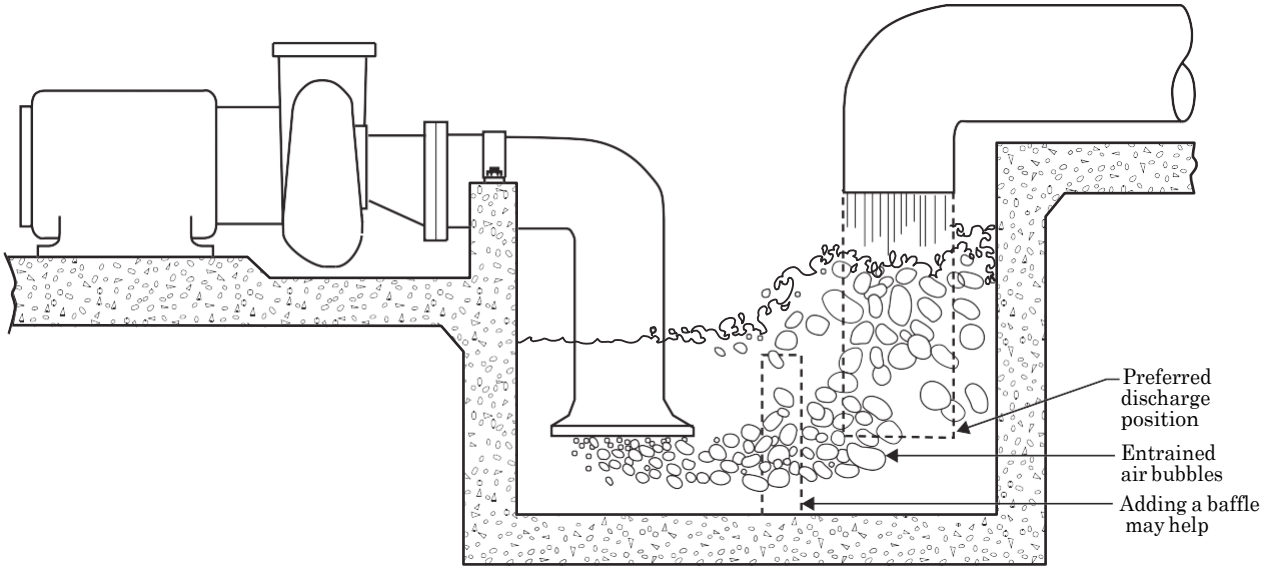

Figure 8–28 Example of pump intake screen cleaned by rotating sprays near Richland, WA

In some cases, it is not possible to locate the centrifugal irrigation pump in a permanent location. It may be needed in more than one location on the farm. This increases the difficulty of providing a proper foundation. Portable pump units generally are mounted on wheels or skids. It is very important to locate this type of unit so that it is level, on firm ground, and securely staked in place so that it will not shift while operating.

In pumping from rivers with moderately sloping banks, the horizontal centrifugal pump may be mounted on skids, sloping timbers, or track so that it can be removed quickly from floods. This method also can be used where the water level fluctuates sufficiently to be out of range of suction lift if the pump were installed in a permanent location. With steep banks it may be necessary to build a foundation platform secured to piling or to place the pump unit on a floating barge or boat (fig. 8–29).

Care should also be taken on the discharge side of the pump. Using small or undersized discharge valves, piping, and fittings increases the friction loss and thereby the energy costs. Abrupt changes in pipe diameter create turbulence and places for air pockets to form. Discharging at a right angle into a manifold once again creates turbulence and restricts flow. A wye (Y) branch connection in the direction of flow is preferred if a change in direction is needed (fig. 8–30).

Figure 8–29 Pump unit on a flowing barge in an animal waste pond near Nampa, ID

(f) Priming and startup

Starting a centrifugal pump with an empty discharge line and an open-line gate downstream from the pump with no back pressure can create extreme power demand that can overload the pump motor. Backpressure on a centrifugal pump is necessary to avoid this situation. The recommended startup procedure is to close the pump discharge line gate at startup, slightly open the line gate to fill the line, and then fully open the line gate (valve). A closed check valve at the pump discharge plus a filled delivery line may provide sufficient backpressure for pump startup, if the pump system has been recently operated. However, a leaky flap on a check valve (bad seal or debris lodging) or other pipe leakage may not allow sufficient backpressure to be maintained between shutdown and restart operations. Before startup, read the backpressure using the pressure gage downstream from the check valve to determine if backpressure is sufficient for startup with an open discharge line valve. During startup of an empty discharge line, the air in the discharge and delivery lines must be purged through an open vent or open-end valve. Always follow the pump manufacturer's recommendations for pump startup. Caution should be used if the pump is operated at or near shutoff head (no flow, dead head condition) for any length of time. Excess energy builds up, increasing the temperature of the fluid being pumped and eventually causing the fluid to boil and damage the pump. Note that startup procedures for propeller pumps (axial flow) are significantly different than those for a centrifugal pump.

Centrifugal pumps are typically not self-priming, and even the self-priming centrifugal pump requires the pump casing to be full of water to enable it to evacuate the air from the suction line. The typical centrifugal pump used in irrigation will not lift water from a source of supply unless both the pump casing and the suction pipe are full of water. Priming of most irrigation pumps is generally accomplished by:

- *use of a foot valve and water from an outside supply*—The outside supply must be large enough to keep the pump and suction line filled until the pump is primed (fig. 8–31).

Figure 8–30 Poor discharge piping practices *(courtesy of Cornell Pump Company)*

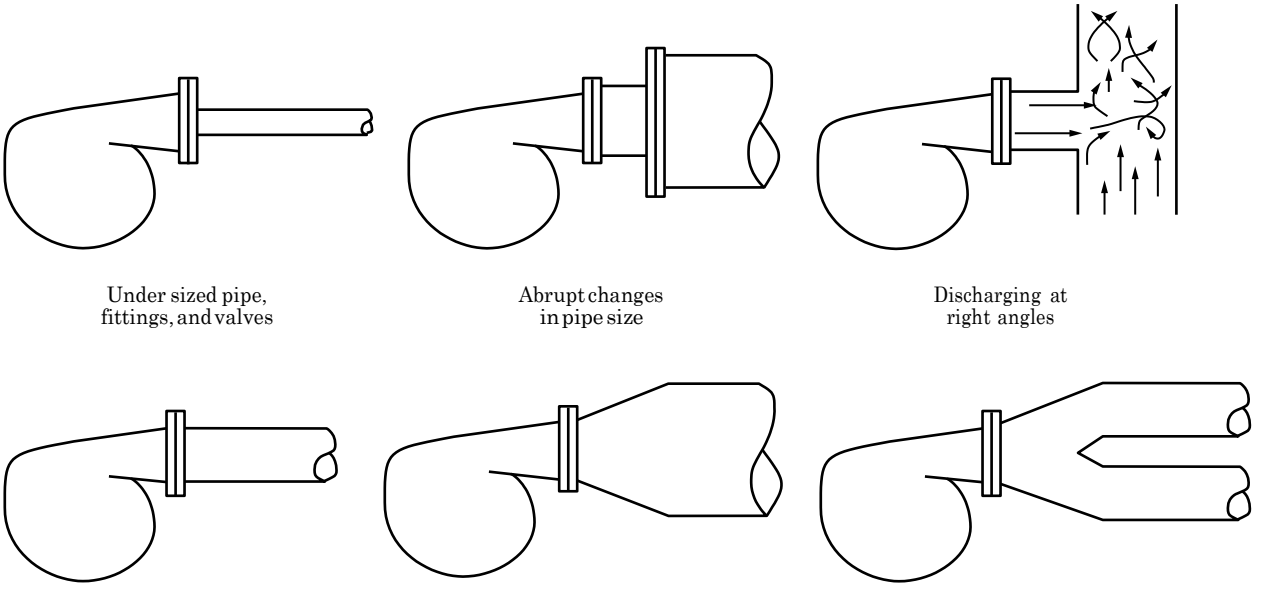

Figure 8–31 Priming with foot valve and water supply

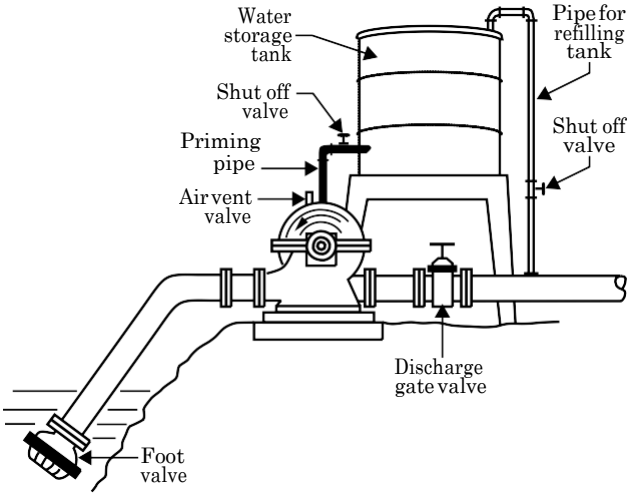

- *separate hand-controlled priming pump and foot valve*—The hand-priming pump is a simple, high-speed air pump with its primer suction inlet connected to the priming part of the centrifugal pump (fig. 8–32). The pump handle is used to actuate a diaphragm in the priming-pump chamber. To prime the pump, close the discharge gate valve and air vent valve. Open valve in priming line. Exhaust air from pump and suction piping until water flows from priming pump. Close valve in priming line, start centrifugal pump, and open discharge gate valve.

- *engine exhaust*—Pumps powered by combustion engines can be primed by a device utilizing the engine's exhaust gas, known as an exhaust gas ejector primer (fig. 8–33). This device is essentially a velocity pump for the removal of air from the centrifugal pump and the suction line by the entraining action of a rapidly moving jet of exhaust gas from the engine.

  With the exhaust primer, rapidly moving exhaust gas expands and contracts in passing through the ejector nozzle and the Venturi tube entrains air in the mixture at the induction chamber. The continued entraining effect rapidly removes air from the pump casing, and water is drawn into the suction pipe and the pump casing.

  Follow manufacturer's instructions to prime the pump.

- *manifold primer*—The manifold primer can be used on a wide variety of combustion engines and have four or more cylinders (fig. 8–34). This primer uses the engine manifold vacuum to evacuate air from the pump casing and suction line. It is equipped with a float valve that provides instant and positive closure as soon as priming is complete to prevent reverse flow during normal pump operation. The manifold primer is almost automatic on most installations; however, it is generally furnished with a reset switch to open the float valve any time it closes prematurely.

  To prime pump, close discharge gate valve, run motor at slow speed, and open shutoff valve of primer. When pump is full of water, close shutoff valve, accelerate engine, and open discharge gate valve.

Figure 8–32 Priming with foot valve and hand primer, blueberry farm near Fargo Lake, WA

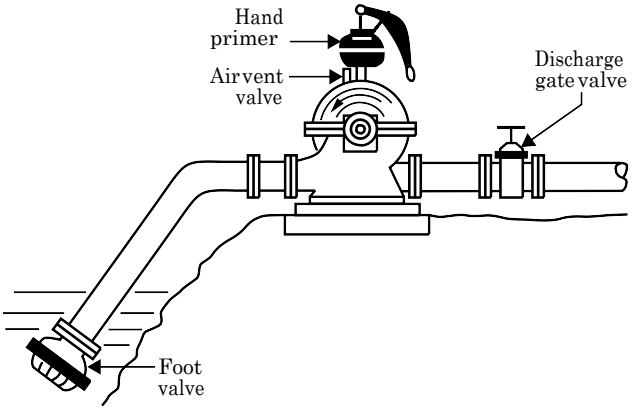

Figure 8–33 Priming with exhaust primer

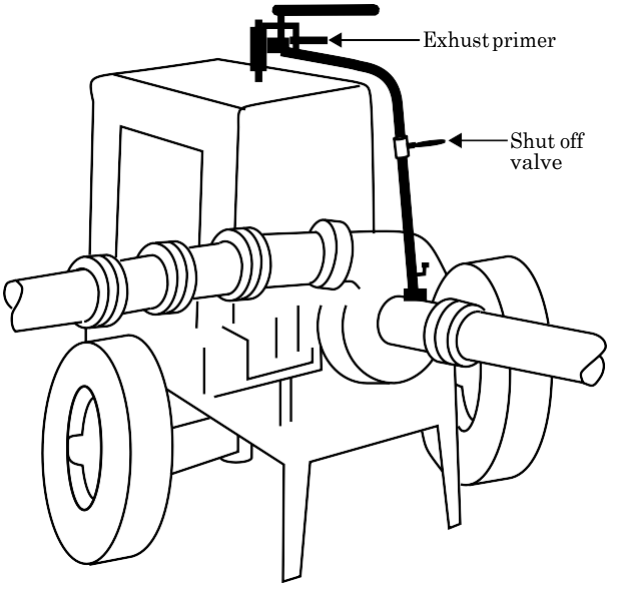

- *dry vacuum pump*—Priming by this method involves the use of a dry vacuum pump powered by an auxiliary motor or belted or geared-to-the-pump motor to evacuate air from the pump casing and the suction line (fig. 8–35). A water-level indicator of sight glass, as shown in the drawing, will help to determine when the pump is primed.

  To prime the pump, open the discharge gate valve if a check valve is not used, open the primer shut off valve, and start the vacuum pump. When the pump is primed, close the shutoff valve, stop the vacuum pump, and start the centrifugal pump.

- *self-priming centrifugal pump*—Self-priming centrifugal pumps are made by several manufacturers (fig. 8–36). With this type of pump, the pump chamber and hopper must be first filled with water. Its advantage is primarily confined to smaller-size pumps. They are used extensively by contractors, but are generally limited to small irrigation systems.

  After the pump is filled with water, the engine is started. The water within the impeller then is discharged upward into the chamber, as shown in figure 8–36(a). This action instantly creates a vacuum at the impeller eye and air from the suction line and water within the pump rush into this void. They are mixed at the impeller periphery and discharged upward into the chamber where the air escapes from the water. The force of gravity pulls the heavier air-free water down to the impeller. More air is entrained and the cycle is repeated until the pump is primed.

  When the pump is primed, and pumping channels 1 and 2 shown in figure 8–36(b) become one common discharge channel, the water no longer circulates within the pump while pumping. The pump is equipped with a check valve at the suction inlet to the pump, and thus the pump is always full of water and priming is automatic after the pump is once filled by hand.

Figure 8–34 Priming with manifold primer

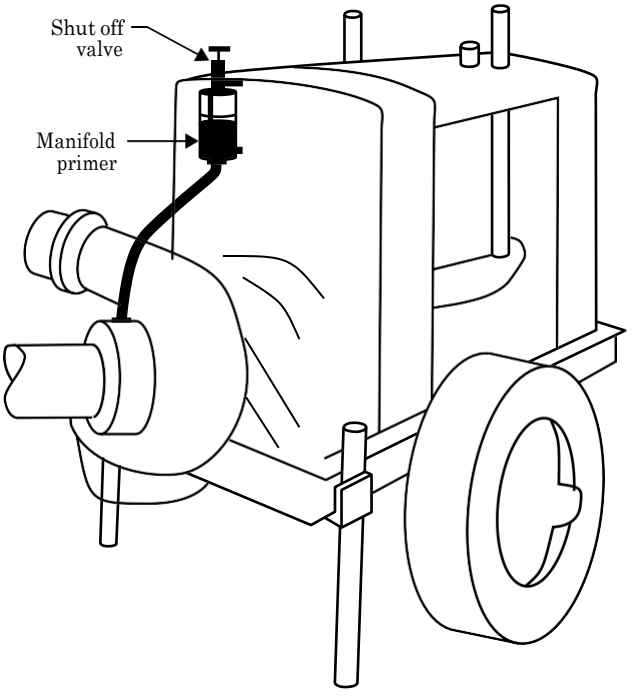

Figure 8–35 Priming by dry vacuum pump

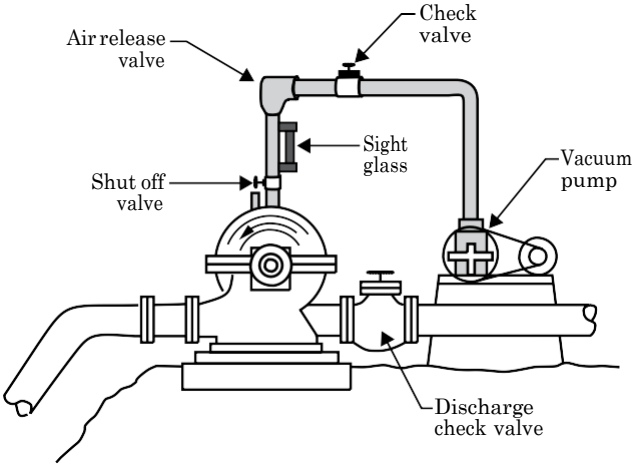

(g) Net positive suction head

Centrifugal pumps do not pull water through a suction pipe; they can only pump water that is delivered to them. The weight of the Earth's atmosphere forces water to rise into the pipe when air is removed from the suction pipe by a primer pump, and thereby delivering water to the pump.

Even in the best of circumstances (including a near-perfect vacuum with cold water at sea level elevation), the maximum water column that can be forced by atmospheric pressure never exceeds about 34 feet in height, but the practical limits are less. As elevation, water temperature, and pipe friction increase, the height of the water column that can be forced drops. The maximum column of water that can be created in a pipe under a given set of conditions is known as net positive suction head (NPSH). More information is given about NPSH in NEH623.0809.

(h) Troubleshooting

When the centrifugal pump fails to operate or the discharge or the pressure drops, the cause of trouble should be investigated immediately and steps taken to eliminate it. The majority of troubles with centrifugal pumps (except mechanical failures) can be traced to the suction line and the joints, elbows, foot valves, and other accessories. Air leaks in the suction line must be eliminated to attain the maximum suction lift for a given installation. The following checklist will be helpful in locating the cause of the trouble:

Figure 8–36 Self-priming centrifugal pumps

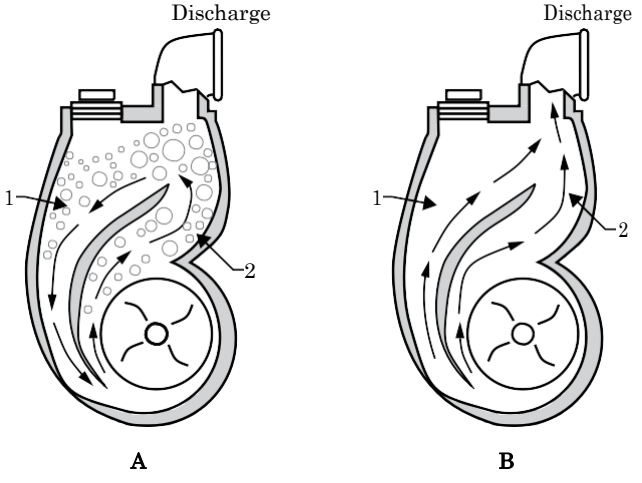

(1) Pump fails to prime:

- Failure of the pump to prime is mostly caused by an air leak in the suction line or pump. The most common sources of air leaks are in the threaded connection of the suction line. Disassemble the fitting, apply the appropriate thread sealing compound, and then reassemble, drawing the threads tight. All connections provided with gaskets must be drawn up tight.
- The check valve on the discharge side of the pump may have debris lodged between the rubber flap and the valve seat. This will prevent the valve from sealing and forming an airtight joint.
- Occasionally, gaskets shrink and admit air into the pump. Tightening the flanges or connections will remedy this difficulty.
- Rotary shaft seals may leak air if improperly greased or worn. Check this by running the pump and squirting oil on the shaft just outside the seal. If oil is drawn in to the seal, a leak is indicated. Filling the seal with grease may eliminate the difficulty, but if the parts are worn, repairs may be necessary. If the seal is always kept full of the proper grade of grease, little trouble, if any, will be encountered.
- Connections in the priming line between the pump and the primer must be air-tight or the pump will fail to prime.
- Screw tight all drain and fill plugs in the pump case to prevent air leaks.
- A plugged suction line or a collapsed suction hose liner is a frequent source of priming difficulties. This possibility should not be overlooked.

(2) Pump fails to develop sufficient pressure or capacity:

- Verify that the pump shaft is turning in the direction of the arrow on the pump casing. As viewed from the motor end, the rotation is usually clockwise, but check the startup instructions that came with the pump. On three-phase motors, swap any two power leads to change rotation.

It is recommended that a qualified electrician perform this task.

- Check the pump drive speed. The capacity of the pump will vary directly with speed, and pressure will vary with the square of the speed. This means that increasing the speed 20 percent will increase the capacity 20 percent, and the head 44 percent. On internal engines, check the governor and adjust if necessary. With electric motors, check to see if motor is wired correctly, and receiving full voltage.
- Check the suction line, strainer, and foot valve. They may be clogged with debris. A frequent source of difficulty is a collapsed suction-hose liner, which has the effect of reducing the capacity and the pressure that the pump develops. The foot valve may be too small or not immersed deep enough to prevent air being drawn in with the water.
- Check for air leaks in pump or suction line. Air leaks in the suction line or in the pump will cause a reduction in both the capacity and the pressure. A small air leak that is not great enough to prevent the pump from priming may reduce both the capacity and the pressure.
- Check the suction lift. If the suction lift is too high, reduction in capacity will occur. Lifts of more than 20 feet are definitely too high for efficient operation. The closer the pump can be located to the source of the supply, the better results will be obtained.
- Check the length of suction lines. Long suction lines have the same effect as a high suction lift because of the increased friction when the water passes through the line.
- Check for worn parts. Worn parts, such as impeller wear rings, will reduce both the capacity and the pressure. The impeller may be damaged or the casing packing may be defective.
- Check the impeller for clogging. If the impeller is plugged with foreign materials, a reduction in both the capacity and the pressure will occur.
- Check the piping layout. It is characteristic of centrifugal pumps operated at constant speed that as the pressure is increased, the capacity decreases. In those cases where the pump pressure and the capacity are in accordance with the characteristic curve, and when the speed of the engine cannot be increased, make some alterations in the pipeline so as to reduce the frictional resistance and thereby increase the capacity of the pump.

(3) Pump takes too much power:

- Check the speed of pump. If it is higher than rating, reduce the speed to the pump rating.
- The pump head may be lower than pump rating, thereby pumping too much water.
- Check for mechanical defects such as bent shaft, binding rotating elements, too tight stuffing box, or misalignment of pump and driving unit.

(4) Pump leaks excessively at stuffing box:

- The packing may be worn or not properly lubricated.
- The packing may be incorrectly inserted or not properly run in.
- Packing is not the right kind or the shaft may be scored.

(5) Pump is noisy:

- Hydraulic noise due to cavitation—suction lift may be too high.
- Check for mechanical defects, such as bent shaft; binding rotating parts; loose, broken, or worn-out bearings; or misalignment of pump and driving unit.

623.0803 Deep-well turbine pumps

(a) Deep-well turbine pump fundamen- tals

The deep-well turbine pump used in irrigation is adapted for use in cased wells or where the water surface is below the practical limits of a centrifugal pump. Successful installations have been made where the water surface was 500 feet below the ground. Turbine-pump efficiencies are comparable with those of a good horizontal centrifugal pump. Long and dependable service is provided if properly installed and maintained. However, the pumps are usually more expensive than centrifugal pumps and more difficult to inspect and repair.

Turbine pumps are classified by the type of flow produced by the impeller. The centrifugal type pump discharges water at right angles to the axis of rotation. In the axial-flow type, water is given an upward thrust by the impeller similar to a boat propeller. Another type commonly used is a combination of axial-flow and centrifugal and is known as a mixed-flow turbine (fig. 8–37).

The turbine has three main parts: the head, pump bowl section, and discharge column. A shaft from the head to the pump bowl section drives the impeller. The bowl section is placed beneath the water surface. The intake section has a screen to keep coarse sand and gravel from entering the pump. The turbine pump has stationary guide vanes surrounding the impeller. As the water leaves the rotor, the gradually enlarging vanes guide the water to the casing and the kinetic energy is converted to pressure. The vanes provide a more uniform distribution of the pressure.

Figure 8–37 Typical deep-well turbine pump (Extension farm near, Lodi, CA)

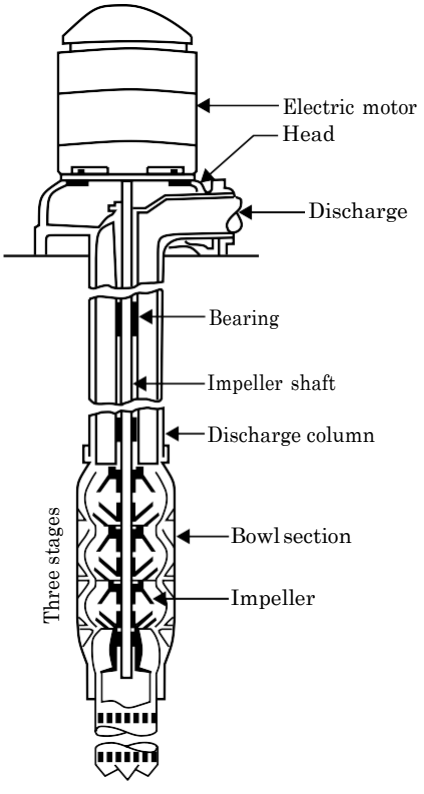

In the deep-well turbine pump, the maximum impeller diameter is determined by the diameter of the bowl, which is, in turn, restricted by the well diameter. Since well diameters usually are relatively small, the head developed by a single impeller (a single bowl), known as a single-stage pump, is not great. It is usually necessary to use more than one stage to create the required pumping head with a one-stage impeller discharging directly into another. The head produced by such a pump is directly proportional to the number of stages; that is, for a given capacity, a two-stage pump will produce twice the head of a single-stage pump.

The type of impeller affects the pumping capacity. The pumping capacity is determined by the area through which flow occurs and by the velocity of flows through this area. The velocity is determined by the peripheral speed of the impeller and the quantity is determined by the width of the impeller. Of two impellers of the same diameter, the one having greater width will have a greater capacity. The impeller may be designed so that the discharge does not increase as rapidly with reduction in lift and, thus, the increase in the bhp that is required at low lift may be avoided. This is an advantage to prevent overloading with changing hydraulic conditions.

Impellers also may be designed with a higher efficiency over a narrow range of discharges with a rapid decrease in efficiencies under both larger and smaller heads. In wells where fluctuations in lift frequently occur, impellers with flat-topped efficiency curves usually will give higher average efficiencies for all-season operations.

Seasonal fluctuations in the water table should be determined prior to installing the pump so the bowls of the turbine pump can be placed below the farthest drawdown point. Although a pump is capable of drawing the water below the bowls by drawing on suction, it is better to have the suction lift in reserve against a lowering of the water table. In locations where fluctuations are apt to occur and maintaining a constant discharge over the anticipated pumping range is important, a power unit with variable speeds should be used.

In areas of fluctuating water table, a good policy is to install a water-level measuring device with the pump. This will enable the operator to keep informed of groundwater conditions and to anticipate system alterations and pump replacements.

Pumping sand entrained water from a deep well causes abrasion of the turbine pump and can lead to premature failure. The problem occurs where water is pumped from a sand formation and the wells are not properly gravel packed, have improperly sized or deteriorated well screens, or the water velocity through the screens is excessive. It is possible to alleviate the problem with a sand separator installed on the pump intake. Sand separators create an additional hydraulic loss to the system, and the sand expelled to the bottom of the well requires periodic bailing to remove the sand accumulation and requires the additional expense to pull and replace the pump. In the severe cases of entrained sand, the well may have to be abandoned and a new well drilled and properly developed.

(b) Principal characteristics of deep-well turbine pumps

The deep-well turbine pump, as constructed today, is fairly well standardized both to materials used and general assemblage. Probably the greatest differences between the manufactured units are in the design of the bowl and impeller and in the method of lubrication. Some companies offer oil-lubricated line shaft bearings, others water-lubricated, and some offer both. Both types have been operating successfully. Wells located in fine sands should be equipped with an oil-lubricated pump. Water for domestic use must be free of oil, and since oil-lubricated pumps waste some oil into the water, it is important that those line shaft bearings be water-lubricated.

Each reputable manufacturer has developed a series of pump bowls that have definite characteristics. A series of bowls that may be used singly or, more commonly, in a series, to meet any combination of head and discharge with a reasonably high efficiency have been developed. Possibly the biggest difference between manufacturers is in the efficiency guaranteed over the range of pumping heads and discharges specified. One manufacturer may be able to meet a range of discharge and lift with a set of bowls at the peak of their performance curve, while another manufacturer may have to utilize a set of bowls that is operating to one side or the other of their best performance to meet

the conditions specified. Most modern turbine pumps are primed by submergence.

The selection of the proper sizes of pump column and shaft, type and numbers of bowls, spacing of bearings and spiders for shaft stabilization, and the matching of various units of the pump to meet all well conditions, have defied all attempts at simplifications and standardization. Most companies offering deep-well turbine pumps have built up their own data from which the various parts of the turbine pump are selected and matched to meet a specific condition. These data are both voluminous and fairly complicated. Specifying limiting sizes of pump features such as column and shafting material used, may result in a pump installation that is more costly, and, in some cases, less efficient, than could be obtained if the matching of the pump assemblage were left to the bidder. Instead, if guaranteed efficiencies and complete description of the unit are specified, sufficient data will be obtained to make proper comparisons.

(c) Pump characteristic curves

Characteristic curves of the deep-well turbine pump are determined by test and depend largely on the bowl design and the speed of the impeller shaft. Head capacity, efficiency, horsepower, and rate of speed are similar to those given for the centrifugal pumps. Efficiency curves, in particular, are similar if the pumps are operated at their designed speed. Turbines, however, can not operate at a high efficiency over as wide a range of speeds as can centrifugal pumps. The reason for this is that high efficiency is possible only if the vanes in the bowl are in line with the flow of water as it leaves the tip of the impeller. The direction of water flow leaving the impeller changes when the speed of the impeller changes. This causes turbulence against the vane and results in reduced efficiency.

Figure 8–38(a) shows a typical characteristic curve for a deep-well turbine pump. It is important that the characteristic curves be studied carefully in selecting

Figure 8–38 Typical characteristic curves for deep-well turbine pump: (A) operating at constant speed, and (B) head, efficiency, and horsepower at which a typical 10-in. turbine pump will deliver 500 gal/min

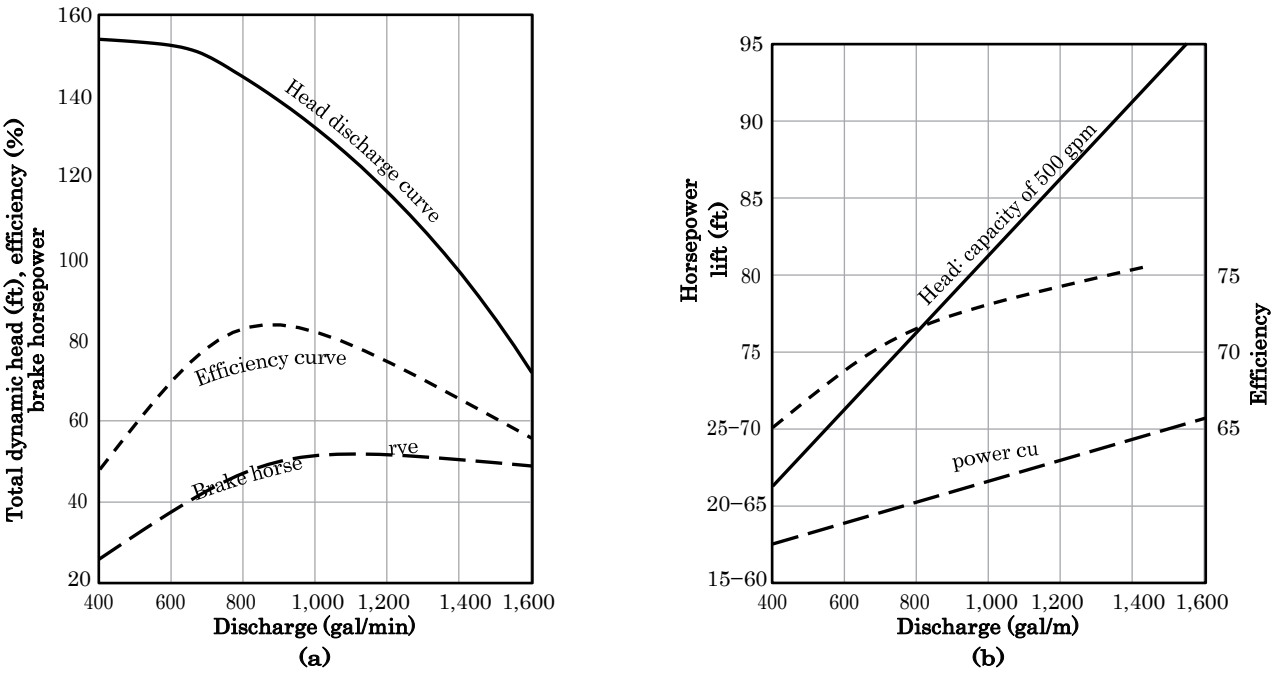

a pump for any operating condition. If the pump is too large, it will operate too far to the left of its curve and the efficiency will be low. A small increase in head will cause a large decrease in capacity. When the pump is too small, it will operate too far to the right of its curve. Again, this provides poor efficiency. The head developed per stage will be low, requiring additional stages that would not have been necessary if a better selection had been made. Figure 8–38(b) shows the effect of change in operating conditions on pump efficiency.

The operating characteristics of deep-well turbine pumps are determined by test and depend largely on the bowl design, impeller type and the speed of the impeller shaft. Flow rate, TDH, bhp, efficiency, pump revolutions per minute, and affinity laws are similar to those given for centrifugal pumps. Vertical turbine pumps are generally designed for a specific speed setting.

Pump curves for turbine pumps are normally shown for a single stage so the TDH obtained will be determined by multiplying the indicated head on the pump curve by the number of stages. The bhp requirements must also be multiplied by the number of stages. It should be noted that the flow rate will not change no matter how many stages are added.

The TDH for deep-well turbine pumps differs somewhat from centrifugal pumps in that suction lift is not involved because the impellers of the pump are submerged. Losses in the pump and pump column are included in the pump efficiency and should not be included when figuring the total dynamic head. Therefore, the TDH is composed of these factors:

- static head, which is the actual vertical distance in feet measured from the water level in the well when pumping the required discharge to the centerline of the pipe at the discharge end
- friction head in the discharge pipeline
- head losses in elbows, reducers, valves, and other accessories
- velocity head at the end of the discharge pipe
- pressure required at the end of the discharge pipe. How to calculate the total dynamic head for a turbine pump using figure 8–39 is shown in example 8–6. Example 8–7 demonstrates how to select the number of stages for a deep well pump for a given head.

(d) Data for selecting pump

Before any pump selection can be made, have available accurate well data. While a pump can be selected for any head and capacity, an unsatisfactory installation is certain to result unless this pump matches the characteristics of the well. Every well should, therefore, be tested before a pump is purchased for permanent installation. These tests should be made with the greatest accuracy, since faulty capacity or head measurements are as bad as no measurement at all. The following information is usually desired by pump manufacturers so that the type and size of pump needed to fit the characteristics of the well can be determined:

Depth of well:_____(ft)

Inside diameter of well casing:_____(in)

Depth to static water level
(first of the season):_____(ft)

Furnish drawdown-yield
relationship curve: _____

_____ Seasonal

fluctuation in water table:_____(ft)

Capacity of pump:_____(gal/min)

Depth to end of suction pipe:_____(ft)

Is strainer required?: _____
If so provide particle graduation _____

Type of driver:
Electric:
Voltage_____Phase_____Cycle _____
Gasoline: _____ Diesel _____
Natural or LP gas _____ Power takeoff ____

effect of changes in operating conditions on deep-well turbine pump efficiency is explained as (fig. 8–40):

- A system curve for a well with the high water table conditions that often exist in the spring at the beginning of the pumping season, is shown

Figure 8–39 Layout of deep-well turbine pumping system used in determining TDH

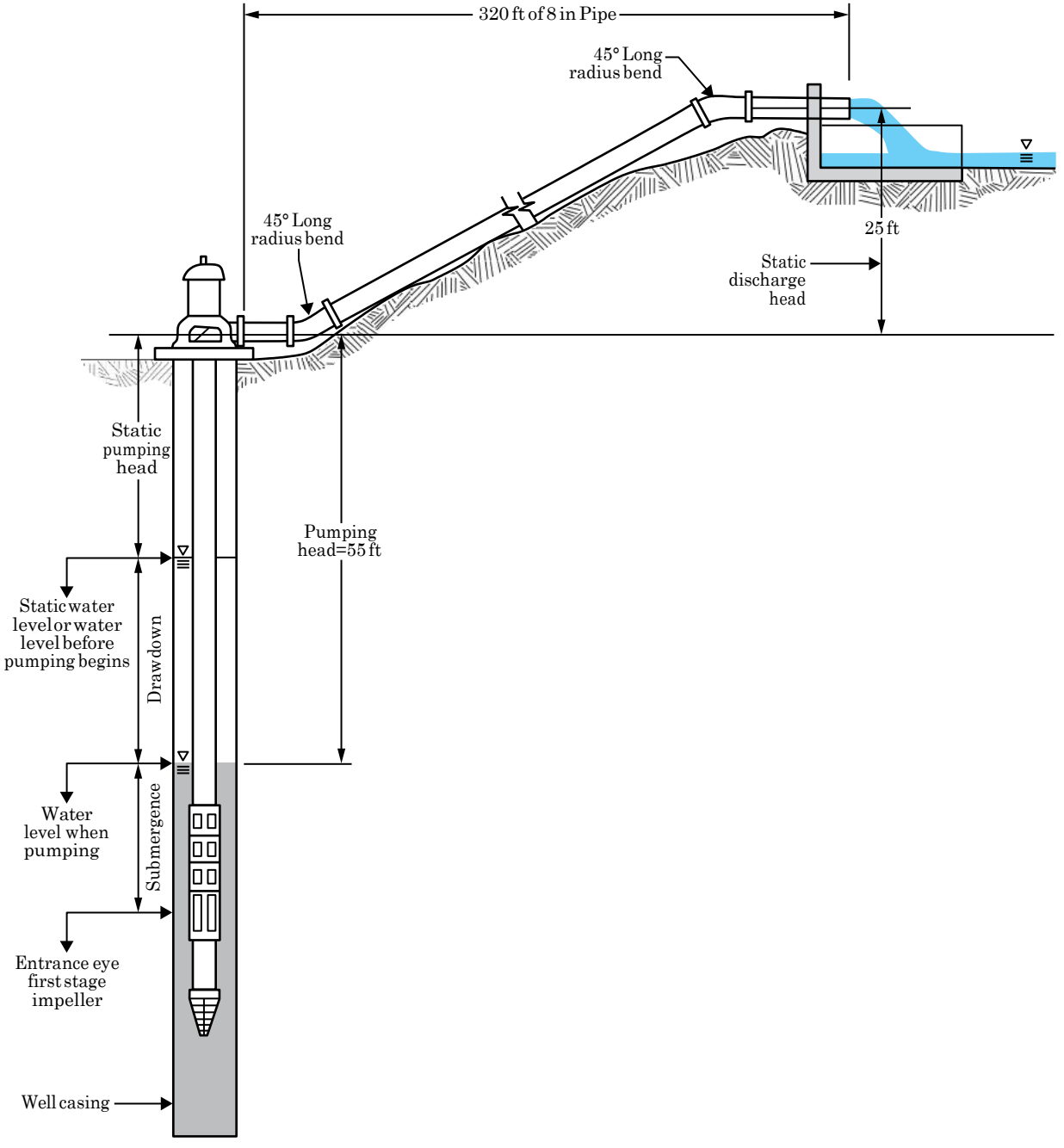

Example 8–6—Calculating TDH for a turbine pump

Given:
A deep-well turbine pump (fig. 8–39) is designed to deliver 1,000 gallons per minute. All pipes and fittings are 12-gage flanged steel.

Find:
Total dynamic head.

Solution: (ft)

1. Total static head:
   (pumping head + static discharge head) = 55 ft + 25 ft — 80.00
2. Friction head in the discharge line:(Hazen-Williams equation, C=120)
3. 320 ft of 8–in. pipe at 1,000 gpm = 320 (ft) ×x 0.0216 (ft/ft) — 6.91
4. Friction head in fittings: two 45° long-radius bends
   $$h_f = 2\left(K\frac{V^2}{2g}\right) = 2\times 0.17\times 0.64$$ — 0.22
5. Velocity head at the end of the discharge pipe: $\frac{V_2}{2g} = \frac{6.41}{2\times 32.2}$ — 0.64
6. Pressure head — 0.00

Total dynamic head (TDH) 87.77

Figure 8–40 Effect of changes in operating conditions on deep-well turbine pump efficiency

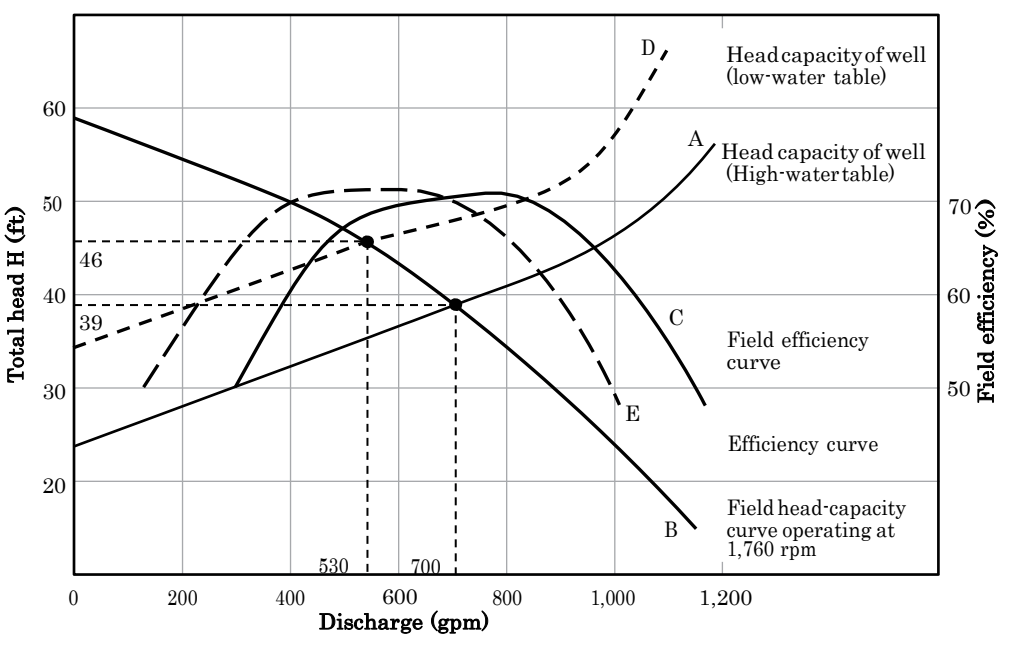

Example 8–7—How to determine output head for multi-stage deep-well turbine pump

Given:
A five-stage, deep-well pump with a 7.13-inch diameter impeller whose characteristic curves are shown in figure 8-41 supplies a discharge of 800 gallons per minute.

Find:
Output head and bhp.

Solution:
Follow the dashed vertical line from 800 gallons per minute up to where it meets the 7.13-inch impeller curve on the upper portion of the chart. Follow the dashed horizontal line left to where it shows 26 feet of TDH. Multiplying 26 by 5 stages gives 130 feet of TDH. Next, follow the dashed vertical line from 800 gallons per minute up to the 7.13-inch impeller bhp curve on the lower portion of the chart and then follow the horizontal dashed line left to where it shows 6.5 bhp. Multiplying 6.5 bhp by 5 stages produces a 32.5 bhp requirement for this pump. Also note that the pump is operating at its peak efficiency of 80 percent. At this efficiency the calculated water horsepower (whp) is 26.

Figure 8–41 Characteristic curves for deep-well turbine pump *(source: Irrigation Water Pumps by Thomas F. Scherer)*

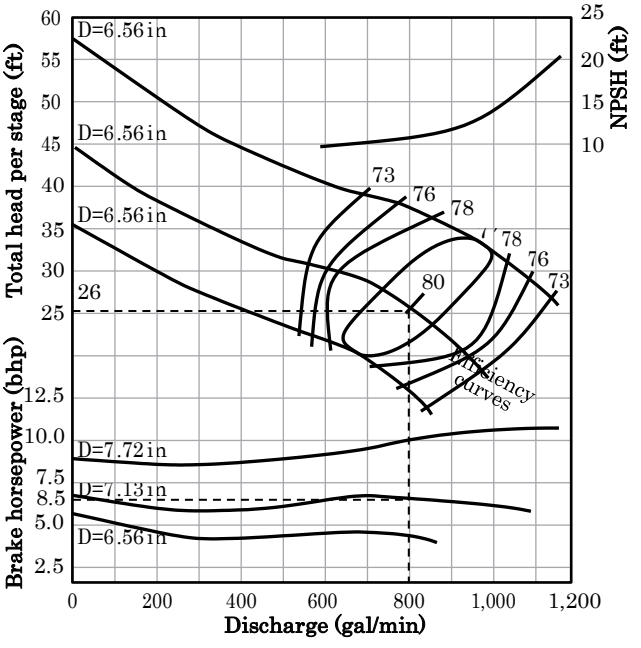

as curve A, and the pump performance curve is represented by curve B.

- Under these conditions, the two curves cross at point X, which indicates that this particular pump would deliver 700 gallons per minute with a lift of 39 feet.
- A pump is chosen with the highest efficiency, about 71 percent at this point as shown by efficiency curve C. Later in the season, the water table may drop 10 feet, and the new head-discharge curve may appear as shown by dotted curve D. This crosses curve B at point Y, indicating that only 530 gallons per minute will be delivered, and the new head will be 46 feet instead of 39 feet.
- Therefore, the operating point has moved down the efficiency curve, and the new efficiency is approximately 65 percent instead of 71 percent.
- In choosing a pump, obtain accurate data on the fluctuations of the water table. In this case a pump with an efficiency curve as shown by dotted curve E would have served both conditions with high efficiency at all times. A pump design which produces a flat-topped efficiency curve is advantageous under the conditions shown in figure 8–40.

(e) Installation

Most of the installation features described under centrifugal pumps also apply to turbine pumps. Deep-well turbine pumps must be in correct alignment between the pump and the power unit, and the pump should be aligned in the well casing so that no part of the pump assembly touches the well casing. This is important because vibration in the pump assembly will wear holes in the well casing whenever the two come into contact.

The pump must be mounted on a good foundation so that the alignment between pump, drive, and well casing will be maintained at all times. The foundation and fasteners must also be designed to withstand upthrust and downthrust forces. A foundation of concrete provides the most permanent and trouble-free installation. The foundation must be large enough so that the pump and drive assembly can be securely fastened. The foundation should have at least 12 inches of bearing surface on all sides of the well. In the case of a gravel-packed well, this 12-inch clearance should be measured from the outside edge of the gravel packing. When the pump is installed in a gravel-packed well, at least two openings should be provided in the foundation on opposite sides of the well to permit refilling with gravel as the gravel-pack settles, as illustrated in figure 8–42.

Figure 8–42 Typical deep-well turbine pump installation

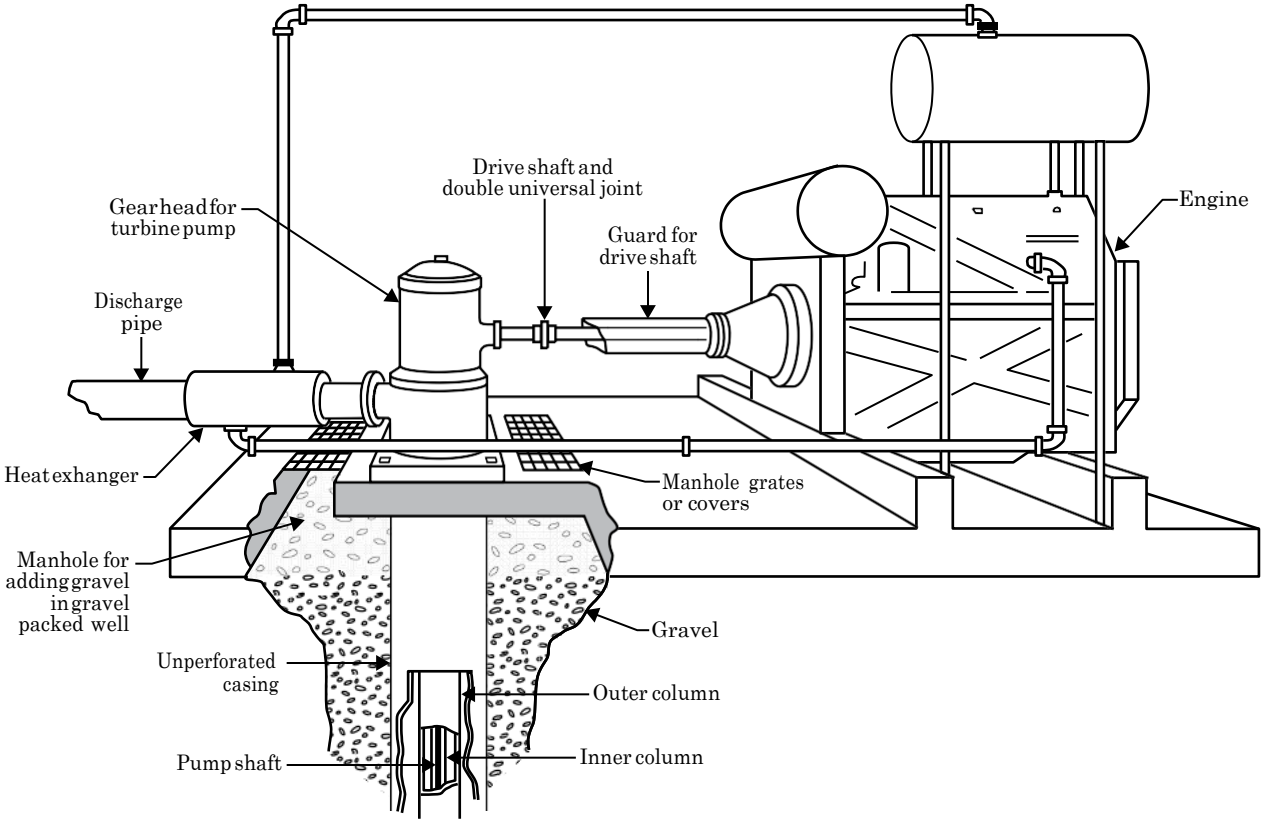

623.0804 Submersible pumps

(a) Submersible pump fundamentals

The submersible pump is simply a turbine pump close-coupled to a submersible electric motor attached to the lower side of the turbine. Both pump and motor are suspended in the water, thereby eliminating the long-line shaft and bearing retainers that are normally required for a conventional deep-well turbine pump. Operating characteristics are the same as described for deep-well turbine pumps.

Submersible pumps are adapted to cased wells of 4 inches in diameter or larger and settings generally in excess of 50 feet deep. The short line shaft makes it particularly suited to deep settings and crooked wells. As the submersible pump has no above-ground working parts, it can be used where flooding may be a hazard by sealing the well and placing the starting box, meter, and transformer on a pole above high water. It is also adaptable to locations where aboveground pump facilities would be unsightly or hazardous.

(b) Principal characteristics of submersible pumps

The submersible pump consists of a pump and motor assembly, a head assembly, discharge column, and a submarine cable to furnish power to the motor, as illustrated in figure 8–43.

The pump, being a centrifugal-type turbine, is equipped with either closed impellers or open impellers or some modification of these two types arranged in series. The closed-impeller type is generally used where it is necessary for the pump to develop high pressures. Water enters the pump through a screen located between the motor and pump.

The submersible motors are made smaller in diameter and much longer than ordinary motors so that they may be inserted in wells of the usual diameters. These motors are made in various ways but are generally referred to as dry motors and wet motors. Dry motors are those that are hermetically sealed to exclude the water in the well. These motors run in high dielectric oil under pressure, which fills the cavity inside the motor, submerging the windings, bearings, and rotor. Various provisions are made to prevent the entrance of water into the motor. External cooling of the oil is accomplished by the flow of water around the motor.

Wet motors are those in which the well water has access to the inside of the motor with the rotor and bearings actually operating in the water. In this type of motor, the windings of the starter are usually completely sealed off from the rotor by means of a thin,

Figure 8–43 Typical submersible pump

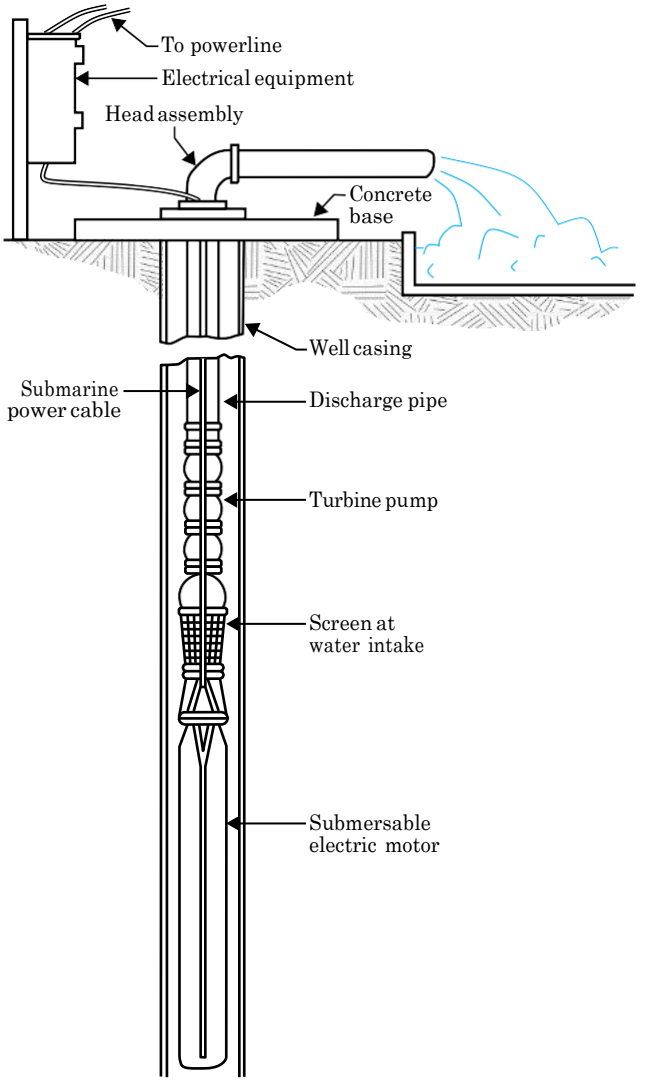

stainless steel inner liner. A filter around the shaft is required to prevent the entrance of abrasive material into the motor. This type of motor must be filled with water during installation so that the bearings will have sufficient lubrication when the motor is first started.

(c) Installation

The discharge pipe connects the pump to the head assembly. This pipe must be long enough to provide complete submergence of both the pump and the motor at all times. The initial cost of installing a submersible pump is low. Ease of installation is an outstanding feature as it is necessary only to add the required length of discharge pipe to lower the unit to the proper setting. The head assembly should rest on, and be securely fastened to, a concrete base that covers the well casing. Since the complete pump and motor assembly is in the well, no pump house is required, thus saving installation costs. The control panel, however, which includes an entrance switch, meter, magnetic starter, and, in the case of a dry motor installation, an oil well safety control, should be enclosed in a waterproof box.

The average number of starts per day over a period of months or years influences the life of a submersible pumping system. Excessive cycling affects the life of control components, such as pressure switches, starters, relays, and capacitors. Rapid cycling can also cause motor spline damage, bearing damage, and motor overheating. All these conditions can lead to reduced motor life.

The pump size, tank size, and other controls should be selected to keep the starts per day as low as practical for longest life. Consult the manufacture's information for the maximum recommended number of starts per 24-hour period.

Motors should run a minimum of one minute to dissipate heat buildup from starting current. Six-inch and larger motors should have a minimum of 15 minutes between starts or starting attempts.

623.0805 Propeller pumps

(a) Propeller pump fundamentals

There are two types of propeller pumps, the axial-flow (or screw type) and the mixed flow. The major difference between the axial-flow and the mixed-flow propeller pumps is in the type of impellers, as illustrated in figure 8–44.

The principal parts of a propeller pump are similar to the deep-well turbine pump in that they have a head, an impeller, and a discharge column. A shaft extends from the head down the center of the column to drive the impeller.

Where propeller pumps are suited, they have the advantage of low first cost and the capacity to deliver more water than the centrifugal pump for a given size impeller. Also, for a given change in pumping lift, the propeller pump will provide a more nearly constant flow than a centrifugal pump. Their disadvantage is that they are limited to pumping against low heads.

(1) Axial flow pumps

The axial flow single-stage propeller pumps are limited to pumping against heads of around 10 feet. By adding additional stages, heads of 30 to 40 feet are obtainable. These pumps are available in sizes ranging from 8 to 48 inches. The impeller has several blades like a boat propeller. The blades are set on the shaft at angles determined according to the head and speed. Some manufacturers have several propellers for the same size of pump, thereby providing for different capacities and heads. The water is moved up by the lift of the propeller blades and the direction of flow does not change as in a centrifugal pump. The spiral motion of the water results from the screw action, but may be corrected by diffusion vanes.

(2) Mixed flow pumps

The mixed flow propeller pump is designed especially for large capacities with moderate heads. The smaller size single-stage pump will operate efficiently at low heads from 6 to 26 feet. The multiple stage and large size pumps will handle heads up to approximately 125 feet. They are generally built in sizes ranging from 10 to 30 inches. The mixed flow pump uses an open

Figure 8–44 Typical axial and mixed flow pumps

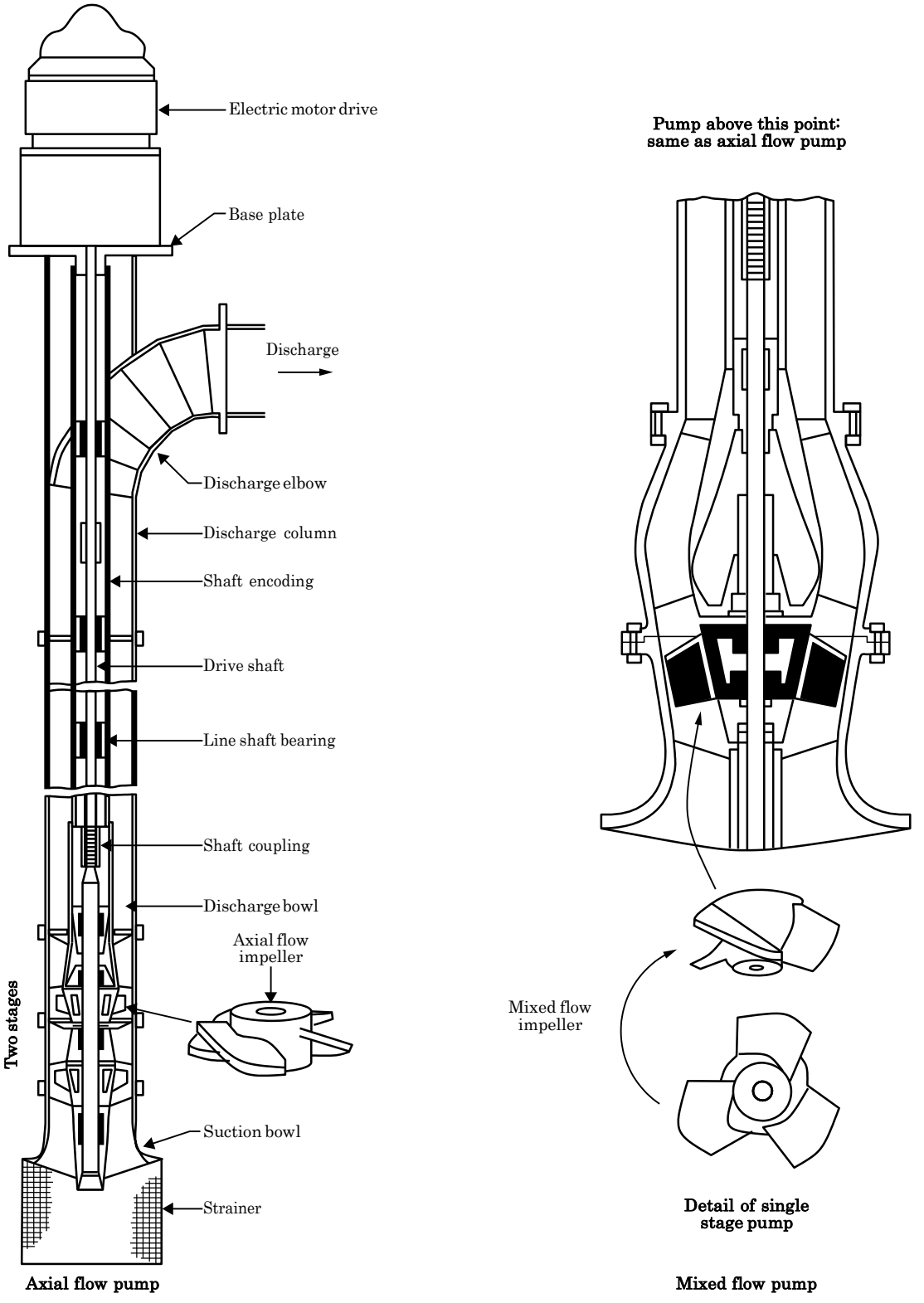

vane curved blade impeller that combines the screw and centrifugal principles in building up the pressure head. They have a capacity range from 1,000 gallons per minute to approximately 50,000 gallons per minute depending on size, stages, and heads. The mixed flow pump operates more efficiently against higher heads than the axial flow propeller pump.

(b) Principal characteristics of propeller pumps

Power requirements of the propeller pump increase directly as the head increases, so adequate power must be provided to drive the pump at maximum lift. There is some tendency for a propeller pump to overload as head is increased. For this reason, select a motor which will provide ample power to drive the pump through the entire range of conditions due to changes in water level or discharge pressures, including head at startup. Propeller pumps are not suitable under conditions where it is necessary to throttle the discharge to secure reduced delivery. Accurately determine the maximum total head against which this type of pump will operate.

Propeller pumps are not suitable for suction lift. The impeller bowl must be submerged with the pump operating at the proper submergence depth. Different makes and sizes of pumps require different submergence depths. Therefore, the recommendations of the pump manufacturer should always be followed. Failure to observe required submergence depth may cause severe mechanical vibrations and rapid deterioration of propeller blades.

Proper clearances must be maintained between the end of the intake pipe and the side walls and bottom of the pit or pump-intake bay. Failure to observe manufacturers' recommendations on this point can result in lower efficiencies. When two or more pumps are installed in one pump bay, there must be a separation far enough so as not to interfere with each other. The pump manufacturers have specifications for this distance. In general, this distance should be three times the diameter of the bell at the intake end of the pump measured between bells. Some propeller pumps are design from reservoir or ditch banks manufacturers' recommendations need to be observed.

Some manufacturers recommend that each propeller pump have its own sump. This can be obtained by constructing a baffle wall between adjoining pumps reaching from the sump floor to the water level in the sump. When each pump has its own sump, the distance between pumps is controlled by the required clearance between the end of the suction bell and the sump side wall. Sidewall clearances, floor clearances, and minimum submergence depth required for propeller pumps are given in NEH623.0810.

(c) Pump characteristic curves

Characteristic curves for propeller pumps are quite similar to those for turbine pumps. Typical head capacity, efficiency, and bhp for a given pump size, type of impeller, and discharge are illustrated in figure 8–45.

Propeller pumps are made by most of the nationally known pump manufacturers and by many small local machine shops. The large pump companies have rating curves developed by actual tests. These rating curves take into account all losses in the pump.

Pumps manufactured by small shops for local distribution generally lack the hydraulic design requirements incorporated into those manufactured by larger corporations for national distribution. The result is that they are generally cheaper to buy, but have higher operating costs, particularly for higher heads. Few of the small local companies have made sufficient tests to develop adequate rating curves. Generally, for static lifts up to about 4 or 5 feet, losses in the pump are not so important and these locally manufactured pumps may be fairly economical.

The TDH for propeller pumps is similar to that for deep well turbine pumps and is composed of the following factors:

- Static head, which is the actual vertical distance measured from the low-water pumping level in the pump bay to, as shown in figure 8–46, (a) centerline of pipe at the discharge end when the water level is below the pipe at the discharge end, (b) to the water surface at the discharge end when the pipe is submerged, and (c) to water level in discharge bay when installation is made to take advantage of siphoning.

Figure 8–45 Typical characteristic curves for an 18–inch axial flow, single-stage propeller pump with three different types of propellers

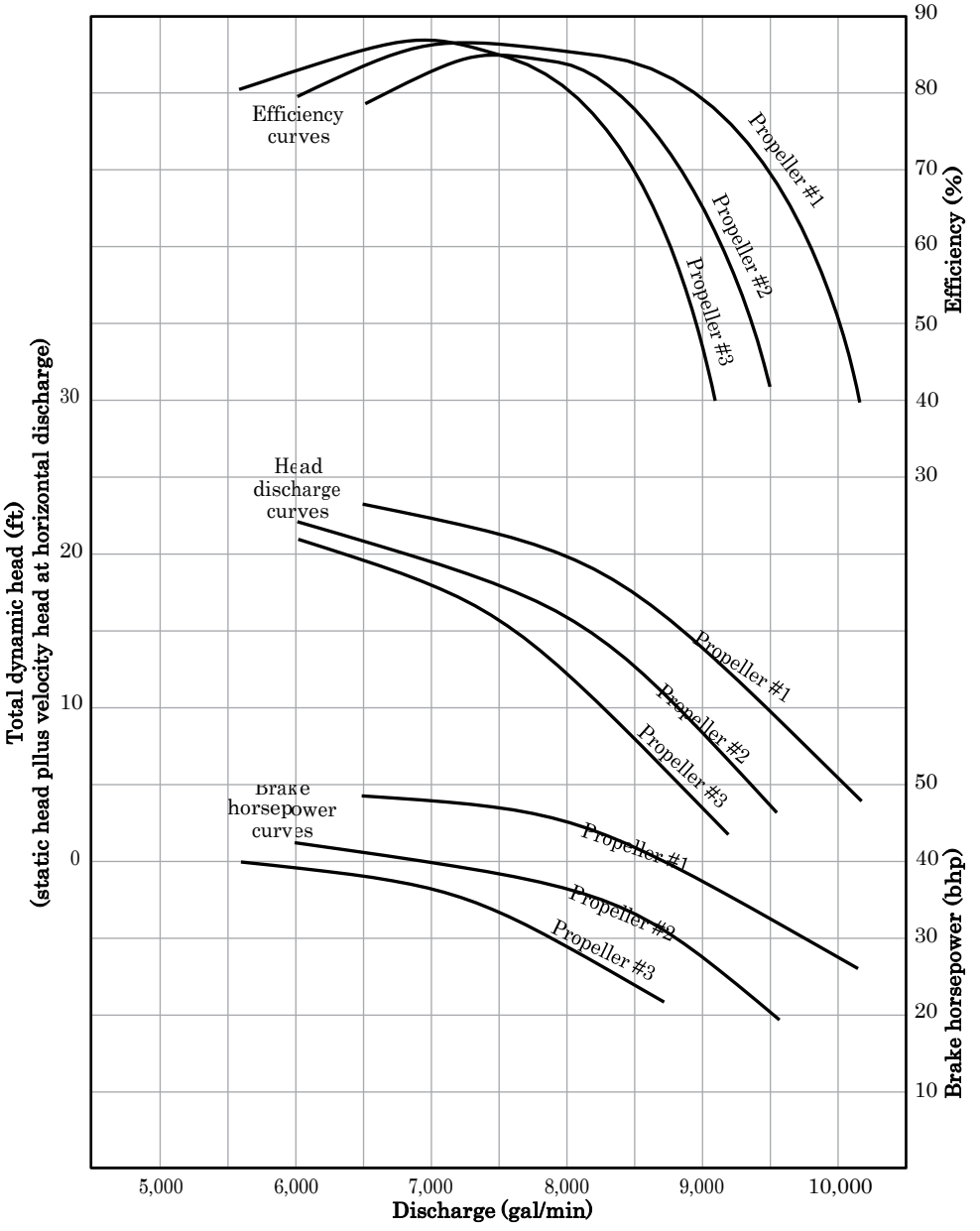

Figure 8–46 Layouts of propeller pumps in determining TDH in example 8–8

(a) Water level below pipe at discharge end

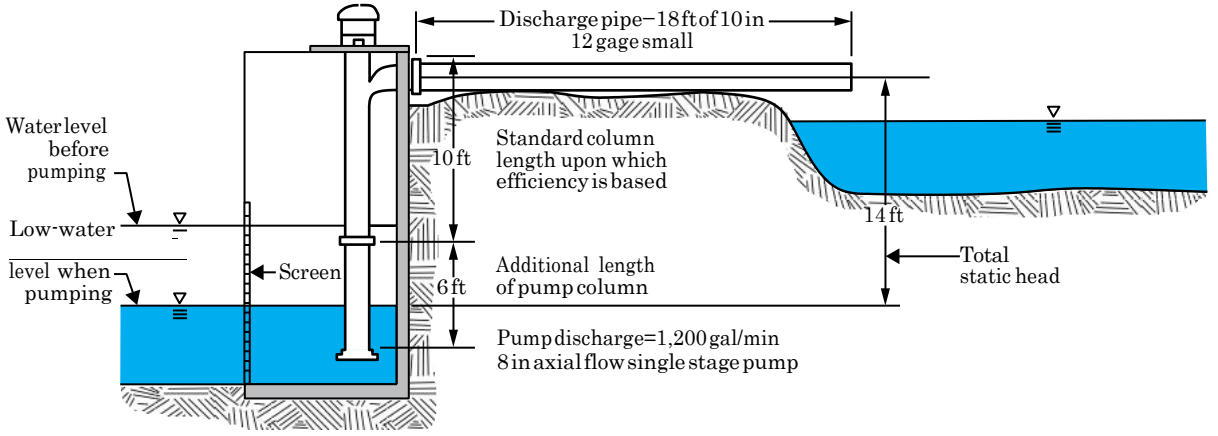

(b) Water level above pipe at discharge end

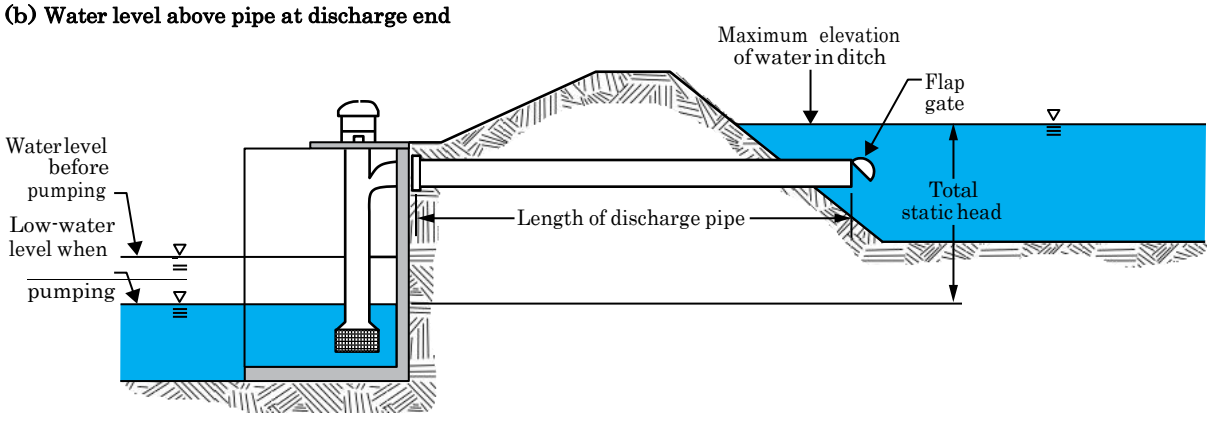

(c) Discharge end of pipe submerged for siphon action

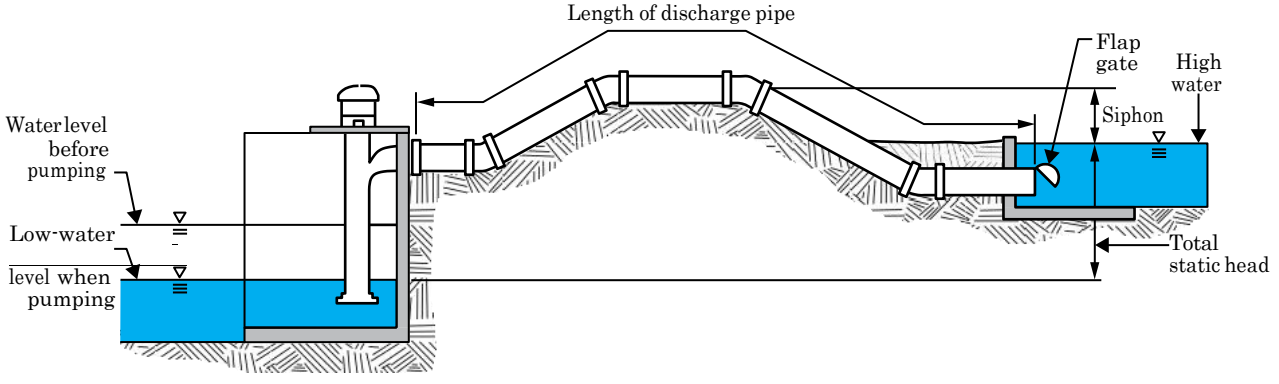

- In the case of a siphon installation at the start of pumping, raise the water to the highest point in the line to fill the discharge pipe. The siphoning action will start and some reduction in head will take effect. No additional power will be required; however, capacity will be reduced until siphoning starts. The limit to practical siphon lift depends upon altitude above sea level, water-vapor pressure at water temperature, velocity head at high point in the siphon, and head loss in the siphon piping.
- Head losses in pump column pipe, pump discharge elbow, and suction bowl are generally included when the pump efficiency is determined. Some companies base their efficiency on a standard length of pump column. If a longer length than the standard is used, the friction loss for this additional length must be added in determining the total dynamic head.
- Friction head in the discharge pipeline.
- Head losses through flap valves and strainer.
- Velocity head at the end of the discharge pipe.

The velocity head and friction losses can be reduced by enlarging the discharge pipe. Generally, a smooth iron discharge pipe should be 2 to 4 inches larger than the pump elbow. Corrugated pipe will require a correspondingly higher increase in size. The increase in size should not be made abruptly. An expanding section 3 to 4 feet long should be used to connect the pump to the discharge pipe.

(d) Data for selecting pump

In general, the data needed for properly selecting a propeller pump and drive are about the same as that for the other types of pump. Reasonably accurate data must be furnished to the pump manufacturer for proper selection among the available line of propeller pumps. These data should include:

- Capacity of pump (gal/min)
- Discharge conditions: (show by sketch)
  - — discharge above water level
  - — discharge submerged
  - — siphon

Example 8–8—How to find TDH for propeller pump

Find:
Determine total dynamic head for the pumping layout shown in figure 8–46(a) for a discharge capacity of 1,200 gallons per minute.

Solution:

	(ft)
Total static head (pumping level to centerline of discharge pipe)	14.00
Friction head in additional 6 feet of pump column (as published by company 0.307/ft)	
8 in. pipe at 1,200 gal/min = 6 ft × 0.307	0.18
Friction head in discharge line (Hazen-Williams equation, C factor 120):	
10 in. pipe at 1,200 gal/min = 18 ft × 0.01	0.18
Friction head in fittings (no strainer screen on pump)	0.00
Velocity head at end of discharge for 10 in. pipe = v2/2g	0.34
Total dynamic head (TDH)	14.70

- Total dynamic head (ft) See example 9 for method to calculate TDH.
- Strainer: Yes___ No___
- Types of power:
  — Electric: Voltage ___ Phase ___
  — cycle ___
  — combustion engine ___
- Type of driver:
  — direct-connected vertical hollow ___
  — shaft motor ___ vertical pulley ___
  — V-belt ___

(e) Installation

The vertical propeller pump should be set on a firm, adequate foundation and securely fastened so that it will withstand the pump vibrations as well as the dead load of the pump and structure. The entire weight of the complete pump unit is supported by the base or floor plates. The foundation should be designed to support this weight evenly on all sides of the base plate and allow the unit to hang perpendicularly through the floor opening provided for it. It is important to obtain uniform support for the base plate so as to avoid deflection of the pump column.

Generally, the pump is fastened to a floor that is supported either on piling or on the sides of the intake bay or sump. If a partially enclosed pump bay is used, it should preferably be square. A circular shape tends to accentuate the rotation of the water in the sump, which may seriously interfere with pump operations. The installation of baffle plates attached to the sides of the sump will help to overcome this trouble.

A 45-degree-angle propeller pump should be installed with the same care as outlined for the vertical pump. Since this pump must set at an angle to the pump bay and water surface, it is necessary to so arrange the supporting beams so that the pump's base plate can be securely fastened in accordance with the manufacturer's recommendations.

Some type of strainer or screen should be installed to exclude floating wood or other debris that would damage the impeller if drawn into the pump. Some manufacturers provide a small strainer that can be attached to the suction bowl. These strainers work satisfactorily when water is pumped that is comparatively free of floating vegetation and small debris. When the source of water supply contains this type of foreign material, the small strainer is apt to become clogged. When this happens, construct some type of screen around the inlet of the intake bay or sump so as to increase the area for straining out the small debris.

623.0806 Positive displacement pumps

(a) Positive displacement pumps fundamentals

Although the vast majority of pumps for irrigation water supply are rotodynamic (including centrifugal) pumps, positive displacement (PD) pumps are also used in irrigation systems. A PD pump causes fluid to move by trapping a fixed amount of the fluid and then forcing (displacing) that volume into the discharge pipe.

A PD pump can be further classified according to the mechanism used to move the fluid:

- reciprocating-type (for example, piston or diaphragm pumps)
- rotary-type (for example, the helical, lobe, gear, or screw pumps)

The common design feature of all PD pumps is that energy is added to the pumped fluid at discrete intervals; in rotodynamic pumps, energy is added continuously. The pump characteristic curves reflect the fact that the operation of PD pumps is fundamentally different than that of rotodynamic pumps.

PD pumps are normally used to produce high fluid pressures, a feature needed in many agricultural applications, including the injection of fertilizer and chemicals into a pressurized pipe system. They also produce a consistent flow rate, regardless of the head in the system. This consistent flow rate can have important advantages when injecting fertilizer and chemicals into a system.

PD pumps have operating advantages that make them more practical for certain applications. These pumps are typically more appropriate for situations in which the following apply:

- system requires high-pressure, low-flow pump performance
- pump must be self-priming
- flow must be metered or precisely controlled
- pump efficiency is important

PD pumps are often seen in livestock watering systems, when the pump is a mechanical windmill or part of a solar or wind powered system.

One disadvantage is that PD pumps typically require more system safeguards, such as relief valves. Since the flow rate is essentially independent of backpressure, there is risk of overpressurizing the discharge piping and components.

If all the discharge lines downstream of a pump are closed while the pump is operating, overpressure conditions can occur quickly. If the pressure relief valves fail, the pump motor will either reach its lockout torque or the pressure will build until some other part of the system fails or ruptures. Obviously, this would be catastrophic. Therefore, a regular maintenance program to check these valves should be strictly followed. In fact, in many of these pumps, relief valves are internal to the pump.

PD pumps can experience many of the same problems described in regard to centrifugal pumps, and they can experience some problems of their own. In many PD pumps, the cyclical nature of the pumping action causes fatigue in components such as bearings and diaphragms.

(b) Pump characteristic curves

In some respects positive displacement pumps are very different from rotodynamic pumps:

- PD pumps do not have a best efficiency point (B.E.P).
- The capacity is nearly constant as the head changes.

PD pumps deliver a fixed amount of liquid for each cycle of pump operation. In theory, the only factor that affects the flow rate is the speed at which it operates. The pressure generated is determined by the system's resistance to this flow, and the system the pump supplies is not a factor in the flow rate. This feature makes

them suitable for precise application of chemicals and fertilizers into an irrigation system.

As the discharge pressure of a PD pump increases, however, some of the liquid will leak and this reduces the flow rate. This leakage is called slippage and is reflected in the generic characteristic curve shown in figure 8–47. Changing the speed of the pump will shift the vertical pump curve to the right or left.

(1) Affinity laws

Although we tend to associate affinity laws with centrifugal pumps, positive displacement pumps also obey a set of relationships based on the pump speed, flow rate, head, and horsepower. In the case of PD pumps the affinity laws are straight forward.

- *Flow*—Flow varies directly with a change in speed. If the rotational speed is doubled, flow is also doubled.
- *Pressure*—Pressure is independent of a change in speed. If we ignore efficiency losses, the pressure generated at any given rotational speed will be that required to support flow.
- *Horsepower*—Horsepower varies directly with a change in speed. If we double the rotational speed, twice as much power will be required.
- *Net positive suction head required (NPSHR)*—NPSHR varies as the square of a change in speed. If the pump speed doubles, NPSHR increases by four. More information is given about NPSHR.

Figure 8–47 Typical PD pump curve

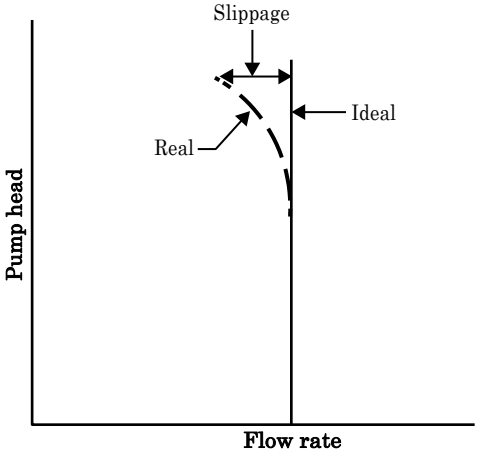

(c) Types of PD pumps

(1) Reciprocating positive displacement pumps

Reciprocating type PD pumps are typical on irrigation systems

Diaphragm pumps—Diaphragm pumps are reciprocating positive displacement pumps that employ a flexible membrane instead of a piston or plunger to displace the pumped fluid. They are self-priming (can prime dry) and can run dry without damage.

One typical application of a diaphragm pump is a priming pump used to prime a centrifugal pump that is set above the water surface (fig. 8–48). Diaphragm pumps are also used in some solar and wind powered livestock water systems.

Diaphragm pumps are used extensively for low-rate chemical injection. Changes in injection rates can be made while the pump is running so accurate injection can be more conveniently established.

A diaphragm pump has both a suction stroke and a discharge stroke. Figure 8–48 shows the stroke action of the diaphragm pump. The handle lifts the diaphragm, creating a partial vacuum that closes the discharge valve while allowing liquid to enter the pump chamber via the suction valve. During the discharge stroke, the diaphragm is pushed downward and the process is reversed. Hand operated pumps are designed to deliver up to 30 gallons per minute at up to 15 feet, but actual capacity is extremely dependent upon the physical condition of the driver. Air, engine, and motor drive units are also available and offer capacities to 130 gallons per minute. Both suction and discharge head vary from 15 to 25 feet.

Piston pumps—One typical application of piston pumps is the mechanical windmill. Mechanical windmills have been used in the United States since the 1850s. In fact, mechanical windmills played an important role in the development of the Great Plains. The design have not changed much in 150 years. They are still used and are often an appropriate solution to supplying a relatively small amount of water in a remote area.

Figure 8–48 Diaphragm pump primer, tomato farm near Sacramento, CA

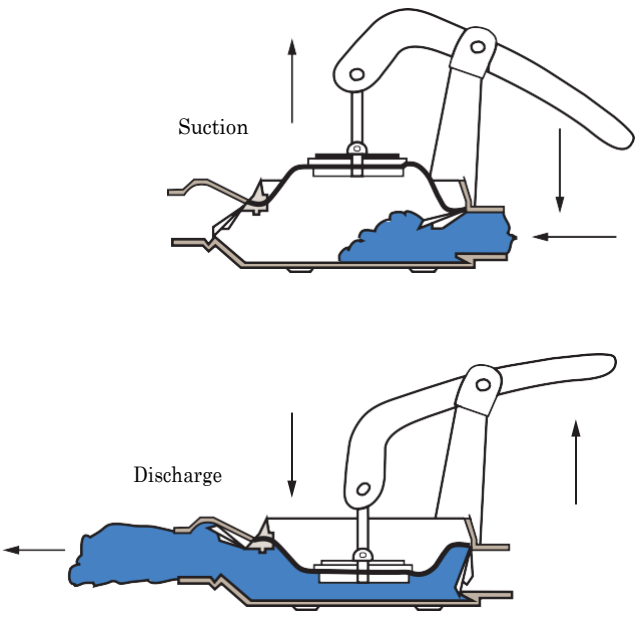

Mechanical windmills use a PD piston pump to move water to the surface. The piston pump is located inside the windmill's drop pipe near the bottom of the well. Water flows through the strainer and into the drop pipe. Once water is in the drop pipe, the two valves work in tandem to force the water up. The top valve is called the plunger and the lower valve is called the check valve. A sucker rod is attached to the plunger and both the sucker rod and the plunger are moved up and down by the action of the windmill. Water can only move up in the drop pipe. Both the plunger and the check valve have a ball that can seal the valve, blocking the water's downward flow (fig. 8–49).

The sucker rod provides both the upstroke and the downstroke. On the upstroke, the plunger valve is closed and the check valve is open. The plunger moves up in the drop pipe, and water above the plunger is pushed higher up the water column. This action, in turns, creates a partial vacuum below the plunger, which lifts the check valve's ball seal and water in the well flows through the strainer and into the drop pipe.

On the downstroke, the ball seal in the plunger opens and the check valve ball seal closes. The plunger can then pass through the water in the drop pipe. During the downstroke, there is no new entry of water into the drop pipe.

This pumping action is repeated as the sucker rod moves up and down.

Chemigation pumps—Chemigation is the application of chemicals via an irrigation application system. Chemigation can be accomplished using the positive PD or by other means. Chemicals that are typically applied through chemigation include:

- fertilizers
- soil amendments (gypsum or sulfur)
- herbicides
- insecticides
- fungicides
- nematicides

Specific forms of chemigation are sometimes called fertigation, herbigation, or insectigation; however, the most commonly used term that covers everything is chemigation.

Chemigation is accomplished by injecting the chemical into a flowing water supply. Most chemigation is applied by sprinkler systems (linear or center pivots) or microirrigation systems. Soil amendments are typically applied via surface irrigation systems.

Chemigation is not recommended if the existing distribution uniformity of the irrigation system is not high. The same problems that are caused by low distribution uniformity for irrigation water will occur in a chemigation system, with potentially much higher costs.

Properly managed chemigation requires injecting chemicals into the water in carefully measured amounts. Since PD pumps can pump fluids in precise amounts regardless of the pressure of the system they are typically used in chemigation systems. Distribution of water on the field during chemigation must be uniform, carefully managed, and controlled.

Care must be taken to prevent backflow of chemically laden water into any water source. Backflow prevention devices are required where chemicals are injected into any pressurized irrigation system. Water quality laws are strict concerning handling of chemicals applied through irrigation systems. Only chemicals labeled for chemigation (usually sprinkler system) application should be used.

Three types of injection units are used for chemigation. The first two types of mechanical units are both PD type, piston pumps and diaphragm pumps. Both can be powered by belt drive or an electric or hydraulic motor and can be adjusted for various flow rates within a designed range.

The third type of chemigation injection unit is the venturi meter. The venturi meter is a tube with a reduced diameter in the throat. Velocity changes in the throat create a vacuum that pulls the chemical into the water stream.

Figure 8–49 Windmill on range land north of Karney, NE, and internal diagram of piston pump

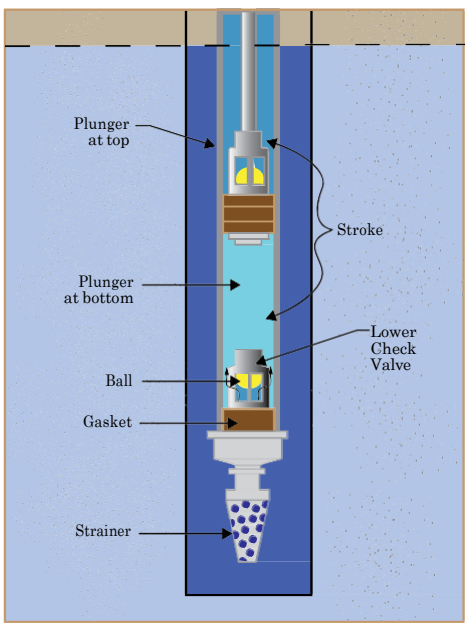

All three pumps are satisfactory for injection of chemicals. Each should be calibrated and set for the volume of chemical to be injected and rechecked, periodically. Diaphragm pumps are more popular because of ease of calibration and maintenance and the lack of external leaks (fig. 8–50).

Chemigation pumps should be selected so chemicals can be applied at the appropriate rate. Injection pumps are commonly purchased with two heads, one for injection of low applications, such as insecticide and herbicide, and the other one for injection of nitrogen and other fertilizers. With proper plumbing, both heads can be used simultaneously.

Piston pumps are typically used to inject nitrogen fertilizer and usually cannot be easily adjusted to inject appropriate quantities of insecticide, fungicide, and herbicide. There are various size pistons and pump arm assemblies available that can be used to inject the correct amount of chemical and to accommodate the desired travel speed of the center pivot.

Piston sizes one-quarter to five-eighths inch are more appropriate for low-rate injection and sizes three-quarter to one and a quarter inches for intermediate and high chemical injection rates. Piston pumps are stopped when changing injection rates, so more time may be required to set the accurate rate (as compared to diaphragm pumps).

Figure 8–50 Diaphragm pump primer used for chemigation on a center pivot

Diaphragm pumps are used extensively for low rate chemical injection. Changes in injection rates can be made while running so accurate injection can be more conveniently established.

Some important characteristics and components of chemigation pumps include:

- accuracy to within ± 0.5 percent
- calibration tube (for calibrating chemical dosage)
- adjustable while running
- durable valve balls and seals
- agitation capability (for mixing and keep chemicals in suspension)
- accessibility for repairs

(2) Rotary type positive displacement pumps

Rotary pumps transfer liquid from the suction to discharge section of the pump through the action of rotating gears, lobes, vanes, screws, or similar mechanisms. Like most positive displacement pumps, they can be used to pump small but precise amounts of fluid.

A helical pump is a form of a rotary type positive displacement pump. This type of pump transfers fluid by pushing the fluid through a series of small, discrete cavities as its rotor is turned (fig. 8–51). Helical pumps can be found in some small scale solar- and wind-powered systems. If larger flows are required, centrifugal pumps are typically used in these applications.

623.0807 Pump drives

(a) General

Pump drives are used for two main purposes: to provide the physical drive coupling between the motor/engine and the pump, and to match the normal operating speeds of the motor/engine and pump. Several factors must be considered in selecting the pump drive, including new installation or partial replacement, efficiency, expected maintenance, availability of components, and long-term versus short-term costs. Some common types of drive mechanisms used in irrigation pumping are: direct, belt, gear head, and power take-off.

(b) Direct drive

The direct drive is the most efficient and desirable drive, as there is little, or no, loss of power in the drive coupling. This type of drive is limited to those applications where the speed of the motor/engine is matched to that of the pump. Variable frequency drives (VFD) for electric motors that can change the speed of the motor to match that of the pump have made the direct drive a common option for electrically powered units.

Submersible pumps are usually built with the motor and pump contained in a single housing with the motor shaft and impeller shaft being one in the same. Larger surface pumps, either vertical or horizontal, can be coupled to the motor with hard shaft couplings, or flexible couplings. Flexible couplings allow some misalignment between the motor and the pump. Direct drive couplings are efficient, 95 to 100 percent, and allow the pump and the motor to be relatively easily decoupled for maintenance (figs. 8–52, and 8–53).

Figure 8–51 Cross section of a helical pump

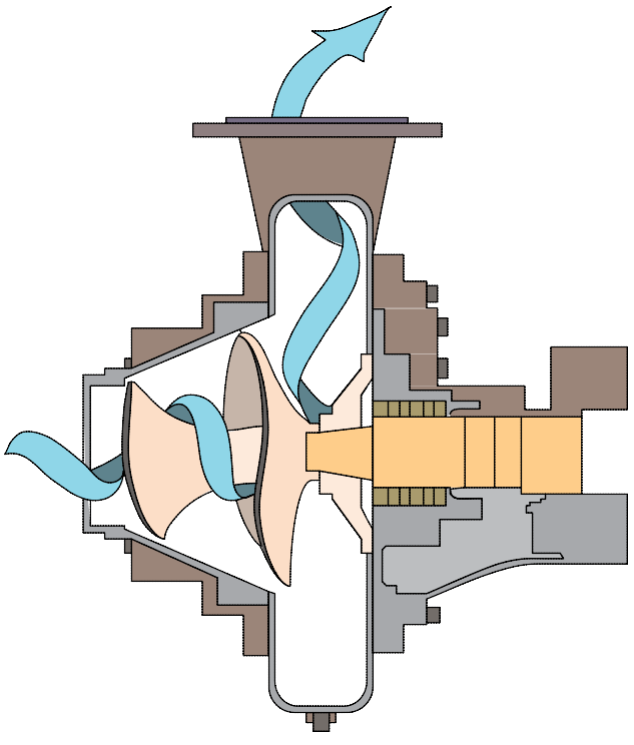

Figure 8–52 Examples of direct drive pumps

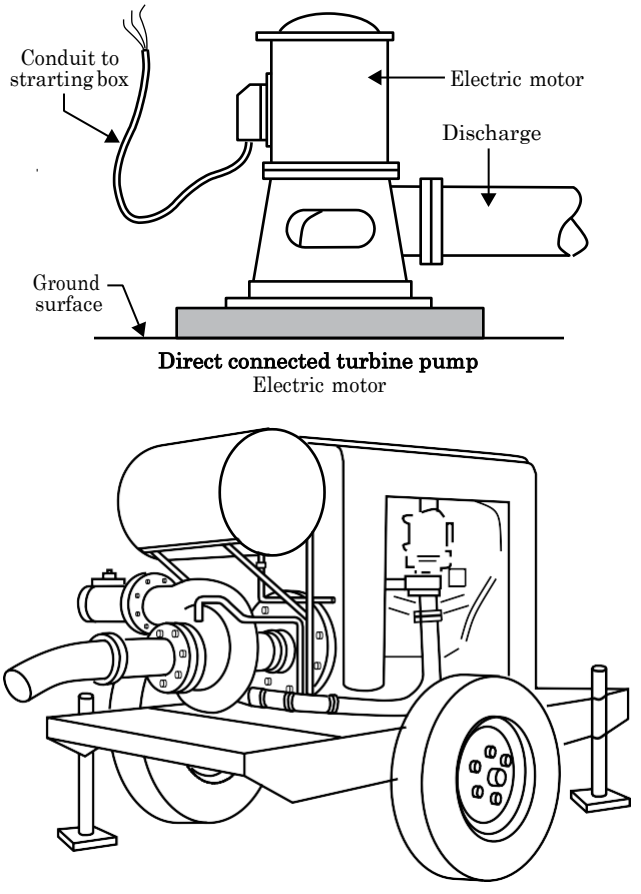

Direct connected turbine pump
Electric motor

Direct connected centrifugal pump
Gasoline motor

(c) Belt drive

The flat belt is the least efficient of all the type of drives (fig. 8–54). Its efficiency varies considerably, usually from 80 to 90 percent, depending upon slippage, type of pulley and belt, pulley size, number of idlers, and the twist used. Historically, the flat-belt was employed to make use of a source of a power source readily available on the farm, but its use has been essentially phased out. Farm tractors and stationary internal combustion engines, either gas or diesel, were often used as a source of power using a flat-belt drive.

The V-belt drive is more dependable and has a higher efficiency than the flat-belt drive (figs. 8–55 and 8–56). When properly installed, V-belt drive efficiencies range from 90 percent to 95 percent. It is also possible to speed up or slow down the pump speed for a given motor speed for optimum operation by choosing the correct ratio of sheave diameters. In no case should the pump sheave be smaller than 3 inches in diameter. Generally speaking, larger sheave diameters promote longer belt and bearing life but maximum belt speed should not exceed 6,500 feet per minute. If belt lengths exceed 158 inches, machine-matched belts must be purchased. Minimum wrap angles (contact between belt and sheave) to prevent overtensioning and belt slippage must be carefully observed. Increasing the distance between the motor and the pump or installing idler pulleys may be necessary to achieve minimum wrap angle.

Figure 8–53 Direct drive pump with gasoline engine

The information given on sheave size, belt size and length, number of belts, and belt tensioning are for informational and advisory purposes only. Conformity does not ensure compliance with applicable ordinances, laws, and regulations. Manufacturers should be consulted for recommended sizes and speeds of their equipment. Prospective users are responsible for protecting themselves against liability arising from deviation from manufacturer's design specifications.

Figure 8–54 Examples of flat belt drives

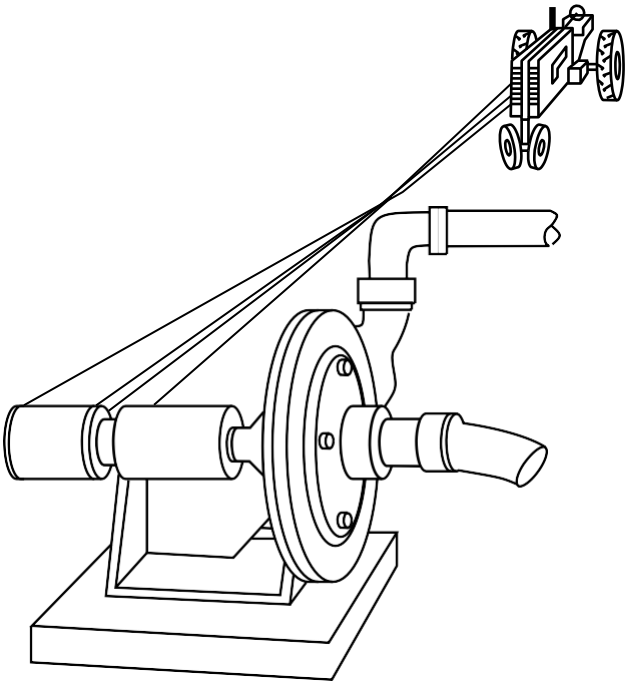

Centrifugal pump with flat-belt drive

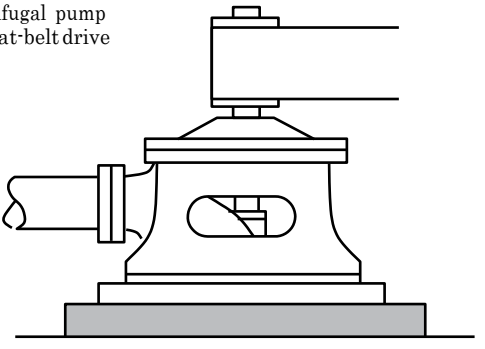

Turbine pump with flat-belt head

Always use at least a two-groove minimum sheave on 7.5- up to 24-horsepower motors. On 25- through 60-horsepower motors, it is advised to use a 3-groove minimum sheave; and, on larger than 60 horsepower, use a 4-groove minimum sheave. Avoid speedup drives with ratios greater than 1.6, which can be very difficult to maintain.

The design belt horsepower requirement is typically obtained by multiplying the nominal belt rating by a service factor to accommodate shock or cyclic loads to be experienced by the belt. Avoid excessive service factors. A 1.5 service factor is adequate for all normal electric motor-driven pumps, and service factors over 3.0 can cause drive component wear problems due to extra stresses resulting from higher tension.

Proper tensioning of the belts is critical to their efficiency and longevity. Retension the belts to the manufacturer's specifications if any of the following conditions exist: if the belts squeal at startup, if they do not have a slight bow on the slack side, or if the sheaves run excessively hot.

Adjustable pitch sheaves should be avoided for drives over 25 horsepower as they are usually not acceptable. They are not precise and the nonuniform groove spacing creates a tugging action between the motor and pump as the sheave rotates, resulting in severe vibrations and likely shorter bearing life.

The normal running life of a V-belt is about 24,000 hours, or 3 years continuous operation if applied and used properly. Under proper conditions, belts can be stored for up to 8 years with no effect on performance. This means that the belt should be protected from moisture, temperature extremes, direct sunlight, and high ozone levels. An occasional spatter of grease or oil does not usually have a negative effect on standard belts, but a large amount will cause a belt to slip.

Figure 8–55 Examples of V-belt drives

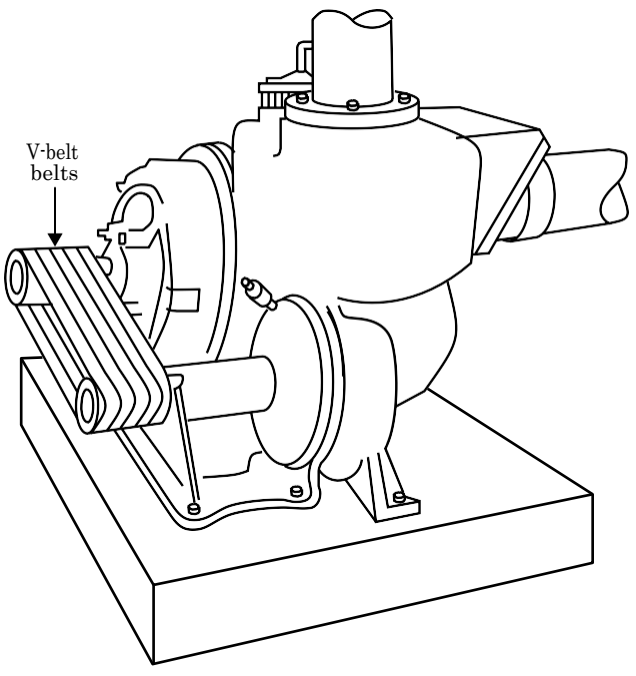

Centrifugal pump with V-belt drive

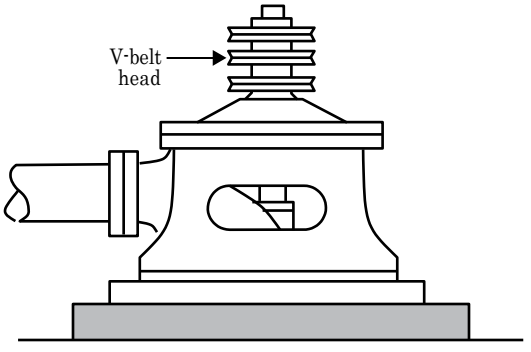

Turbine pump with V-belt hed

Figure 8–56 Turbine pump with V-belt drive south of Crowley, LA

Extensive exposure to oil can also cause the rubber to swell and break down the adhesion between belt components.

The normal temperature range of V-belts is from –30 to 140 degrees Fahrenheit. For every 36 degrees Fahrenheit increase in ambient temperature during operation, the life of the V-belt is cut in half, and for every 2 degrees Fahrenheit increases in ambient temperature. There is a 1 degree Fahrenheit increase in the belt's internal running temperature. Therefore, each 18 degrees Fahrenheit increase in belt internal running temperature cuts the belt life in half.

(d) Gear head drive

Two types of gear heads are generally available, including parallel-shaft and right-angle gear heads. Either of the types is well suited for pump drive applications, depending on the particular installation. The gear head is used to match the normal operating speed of the drive motor/engine to the design pump speed, normally speed reduction.

Gear heads can have an efficiency of 95 percent or more, and a wide variety of sizes and mountings are available. Gear head drives require much less maintenance than belt drives. Although gear heads cost initially more than belt drives, the long-term cost will likely be less due to the reduced maintenance and better immunity to varying weather and temperature conditions. Maintaining adequate lubrication fluid in the gear head and regular changes of lubrication fluid are the principal items of maintenance. However, excessive vibration, overspeed, and overtorque will reduce the lifespan as well.

The gear head is normally mounted directly to either the drive source or the pump, and then a flexible coupling is used to allow for any misalignment (fig. 8–57). It is also possible to use a combination of the gear head and V-belt drives if the installation so requires.

(e) Magnetic drive

The magnetic drive is a relatively new development consisting of rare earth magnets attached to the load, a copper rotor assembly attached to the power unit, and

Figure 8–57 Examples of right-angle gear-head drives

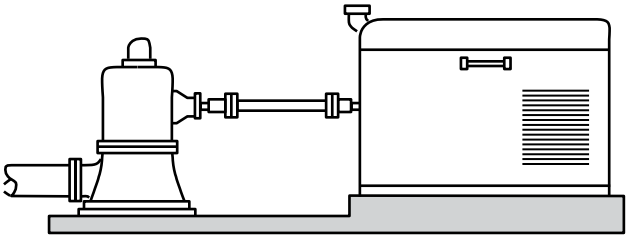

Turbine-type irriation pump with gear head connected to a power unit with a shaft and double universal joint

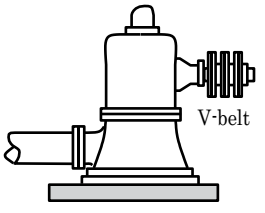

Turbine-pump gear head with V-belt drive pulley

an actuator that controls the air gap between them. Torque is transmitted through the drive in proportion to the air gap and, thereby, allowing adjustable speed that is controllable.

Relative motion between the magnet and copper disks creates electrical eddy currents in the copper disks. These currents create their own magnetic fields, which in turn interact with the magnetic fields of the permanent magnets to transmit torque. Adjusting the distance between the magnet and copper disks varies the amount of torque transmitted.

The magnetic drive can be used with either electric motors or gas/diesel engines, and allows for soft starts, speed control, and overload protection. It can be used in cases where speed reduction is desired, and it does not induce harmonics on the power grid, something of concern for other noise sensitive electronic equipment hooked to the same power line. Although these drives can approach 100 percent efficiency at full speed, they do require control power for the actuator, so in irrigation pump sites where electrical power is not available, a generator is necessary to power this control. Figure 8–58 shows a magnetic drive in use.

Figure 8–58 Vertical magnetic drive, A & B irrigation project near Rupert, ID

(f) Power takeoff

The power takeoff is normally associated with a farm-type tractor and a relatively small centrifugal pump either directly mounted or trailer mounted (fig. 8–59). This type of pump is used a lot in animal waste application (fig. 8–60) and not so much with irrigation. The standard power-takeoff speed is approximately 540 or 1,000 revolutions per minute, while irrigation pumps normally operate at three to four times this speed, making it necessary to use some type of speed increaser between the tractor power-takeoff shaft and the pump impeller shaft. The desired increase in speed is usually obtained through the use of a gear head, a V-belt system, or both.

The power takeoff efficiency can be as high as 100 percent, as it is a variation of direct coupling. Misalignment of the power source and the load reduce the coupling efficiency proportionally and create variations in speed, vibration, and universal joint wear.

Figure 8–59 Examples of power-takeoff drives

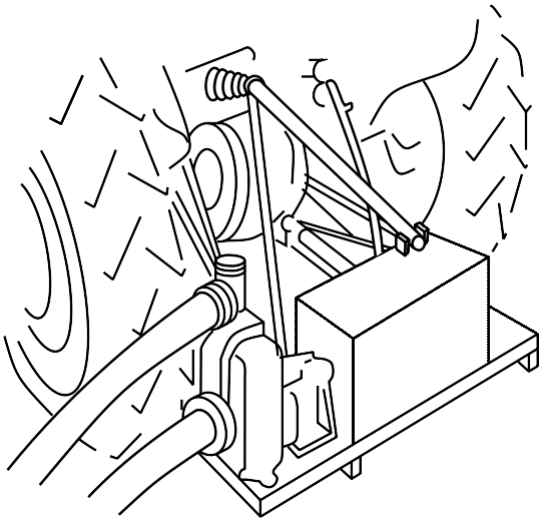

Drawbar-mounted PTO-driven pump
with bevel-gear type speed increaser

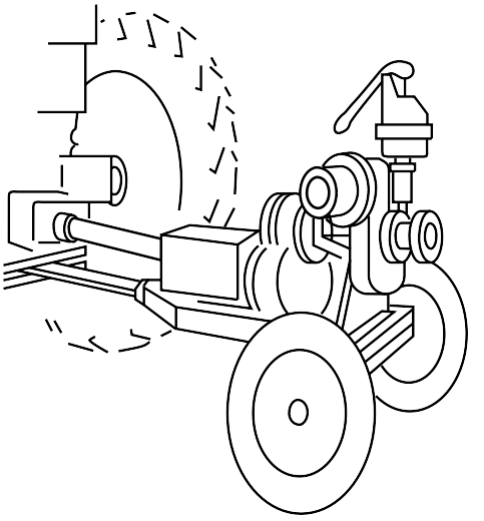

Trailer-mounted PTO-driven pump
with spur-gear type speed increaser

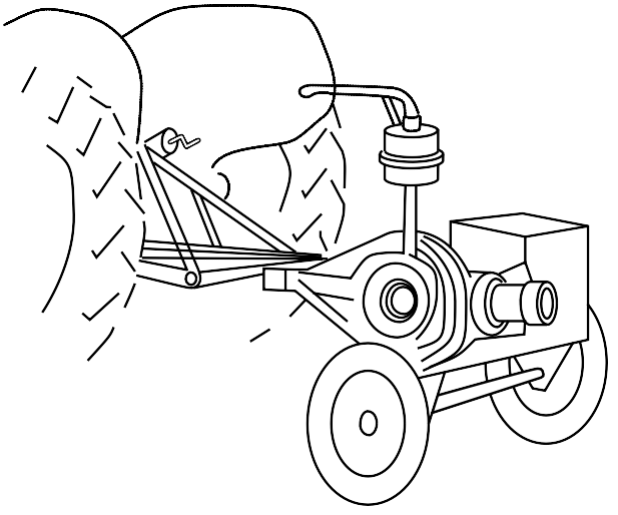

Trailer-mounted PTO-driven pump
with bevel-gear type speed increaser

Figure 8–60 PTO pump in a manure pit in Livingston County, IL

623.0808 Power for pumping

(a) General

Most irrigation pumps are powered by either electric motors or internal combustion engines. The source of power that is best suited for a specific installation depends on certain physical, environmental, and cost factors. The power unit selection should be made after considering:

- amount of power required for pumping
- hours of operation per season
- availability, dependability, and cost of energy or fuel
- depreciation
- portability desired in pumping setup
- possibility of using the power unit for other jobs during the non-irrigating season
- labor and technical requirements and need for convenience of operation
- cold-weather operation
- original investment and discount rate

Matching the engine/motor horsepower to the requirements of the pump is important. Most electric motors over one horsepower can operate efficiently between a full and half-load. However, below half-load, efficiency decreases rapidly. Manufacturer's efficiency curves should be used in selecting design points for operation of internal combustion engines. Previously used power units should be carefully checked and evaluated as to condition, expected life, available horsepower, and speed. The continued use of an older power unit that is in fair to poor condition may only have an efficiency of 50 percent or less. In this case, the overall cost (capital investment, operation, and maintenance) of using an old misfit power unit can be more costly than the most expensive new unit fitted to the job.

(b) Electric motors

An electric motor, properly selected and protected, can be expected to supply many years of trouble free power if properly designed and operated, including correct mounting, rodent protection, good ventilation, adequate shelter from the elements, and safety devices against overloading, undervoltage, and excessive heating. Advantages of the electric power are relatively long life of the motor, low maintenance costs, dependability, and ease of operation. An electric motor also will deliver full power throughout its life and can be operated from no load to full load without damage.

A major disadvantage of the electric motor is the possible lack of availability of power in the area where the motor is to be located. Smaller electric motors, up to approximately 10 horsepower can operate on 120 to 240 volts, single phase, and 60-Hertz, power, but the larger motors, will probably require 230 to 460 volts, 3-phase, 60-Hertz power. Depending on the location and the power company, installation of power lines to the pumping site could cost as much as $5,000 to $50,000 per mile as of 2006. Although the initial installation costs may be high, this energy source may still be the most cost-effective option over time depending on the availability and cost of alternative fuels, higher expected maintenance costs and shorter life expectancy for internal combustion engines, and the expected number of pumping hours per year.

Electric motors are available in a number of National Electrical Manufacturers Association (NEMA) frame sizes and types of enclosures. The NEMA frame size refers to the motors mechanical characteristics such as mounting type and shaft size. The enclosure type refers to the body of the motor and the type of environment that the motor is to be used in. Typically used in pumping applications are the open drip proof (ODP) motor, the totally enclosed nonventilated (TENV) motor, and the totally enclosed fan cooled (TEFC) motor. The ODP motor would need to be located in an enclosure or building to keep it protected from the weather and rodents, but is typically the smallest in size and most economical. The TENV motors have no vent openings and are typically located outside, relying on convection for cooling. The TEFC motors are essentially the same as the TENV motors, except that there is a fan to provide cooling by blowing air across the motor enclosure.

Electric motors are available in either vertical or horizontal configurations; normal, high, and premium efficiency; and inverter-duty ratings. Electric motors should be matched to the pumping application. Electric motors operate at relatively constant efficiency and r/min under a wide range of loads, but the motor efficiency decreases substantially for motor loads less than 50 percent of the rated horsepower. Large motors tend to be more efficient than smaller motors. Motor efficiency does not change substantially with age.

Although the premium efficiency motors are only 2 to 5 percent more efficient than the standard, the cost savings in energy over time will normally overcome the difference in price. Inverter duty motors should be used in conjunction with variable-frequency drive (VFD) speed controllers as the windings and insulation are designed to accommodate the added stress caused by pulse width modulation (PWM) type speed controllers. Electric motors are generally available in 1,200 revolutions per minute (6 pole), 1,800 revolutions per minute (4 pole), and 3,600 revolutions per minute (2 pole).

Vertical hollow-shaft motors are available for deep-well turbine pumps. These motors are equipped with a top cap to facilitate impeller adjustments. A nonreversing coupling to the pump is recommended when the pump has water lubricated bearings that might be damaged if the shaft were turning with no water surrounding the bearings. This condition occurs when the motor is stopped and the remaining water in the system drains backwards through the pump into the well, causing the pump and motor to turn in reverse, possibly at high speed.

The bhp of electric motors is rated at 100 percent continuous operation, and the calculated bhp for a given job is the size of the motor needed. Motors draw power in proportion to the load. If the applied load is more than the rated horsepower, the motor will draw more horsepower than its rated power. The maximum overload a motor can tolerate is expressed by the service factor. Electric motors typically have a service factor, as indicated on the nameplate, in the range from 1.0 to 1.2. The service factor is essentially a safety factor and indicates how much the motor capacity can be exceeded for short periods of time without overheating. It is normally based upon air temperature at 70 degrees Fahrenheit, standard voltage, and a free flow of air around the motor. Therefore, the added horsepower provided by the service factor should not be used to arrive at a motor rating. Most service factors are 1.15, meaning that the motor can tolerate a 15 percent overload. The actual overload can be calculated by equation 8–9:

$$\text{Percent overload} = \frac{(\text{IHP} \times \text{Em} \times 100)}{(\text{nameplate horsepower})} \quad \text{(eq. 8–9)}$$

where:
IHP = input horsepower (measured from a pump test)
Em = motor efficiency (decimal)

The power output of an electric motor is limited by the temperature at which the machine can operate without damage to its insulation. The manufacturer's rating of an electric motor in horsepower is based on this concept. Since there are many variables that affect the operating temperature of a motor, the manufacturer determines the rating based on certain standard conditions. Electric motor ratings are fairly well standardized, regardless of manufacturer, so that comparisons can be made. The following standard conditions are assumed:

- The ambient (surrounding or cooling air) temperature will not exceed 104 degrees Fahrenheit.
- The altitude will not exceed 3,300 feet above sea level. Decrease in air density will reduce motor cooling.
- There will be no restriction of ventilation.

Also of importance, the nameplate (rated) voltage will be supplied, and there will be an allowable increase in temperature above ambient during operation (temperature rise).

If the motor always operates at a temperature below the safe limiting temperature, maximum expected motor life can be assured. Normally, an electric motor can be expected to last 5 to 10 years in continuous operation. Therefore, with only limited pumping over a 6-month season, expect a motor life of 20 years or more. However, for every 18 degrees Fahrenheit temperature rise above the safe limiting temperature, the expected life of the motor is reduced by one half. This is also a linear relationship with time. For a motor that operates under varying conditions, such that it

operates for a portion of the time at 36 degrees above the safe limiting temperature, the expected life will be reduced 4 hours for every hour of operation, and at 54 degrees Fahrenheit above the temperature limit, 8 hours with every hour of operation.

Since the motor inherently produces considerable heat, these factors should be considered in design of a pumping station:

- Any restriction in the air flow through or around the motor would increase its temperature rapidly. Be sure vent openings are clean, free from dirt and grease, and screened with the manufacturer's recommended hardware cloth.
- Protect field installations, both motor and control panel, from direct radiation of the sun, but do not restrict the circulation of the air. Radiation from the sun adds considerable heat and increases the operating temperature of a motor. This can be done with a well-designed sunshade (fig. 8–61).
- Low voltage will cause the motor to draw more current in order to maintain output power. The increase in current will cause the temperature of the motor to increase. At 90 percent of rated voltage, the temperature will increase 11 to 13 degrees Fahrenheit. If the motor is overloaded, it will require more current and more heat will be produced.

(1) Electric motor efficiency

Electrical energy, when available, is usually the most efficient means of powering irrigation pumps. Motor efficiency, the ratio of motor mechanical output power to motor electrical input power, is an important consideration in pump economics. Efficiency is expressed as a percent (95 %), or as a decimal (0.95). Motor efficiency is reduced due to a combination of factors. Under zero loads, efficiency losses are due to bearing friction and conductor losses. When a load is placed on the motor, additional efficiency losses are due to increased current and to stray-load loss. Motor type has an effect on motor efficiency. A fan-cooled motor typically has a lower efficiency than an open drip-proof (ODP) motor due to the power necessary to drive the cooling fan.

Figure 8–62 shows the effect on motor efficiency due to operation at loads less than the full rated load. Large motors will exhibit nearly constant efficiency between 60 and 100 percent of full load and rapidly loose efficiency of operation at loads below about 40 percent of full, or name-plate, load. Significant underloading of an electric motor results in higher power costs relative to a properly sized motor, but does not result in damage to the motor. An overloaded motor generates heat that, if excessive, can damage motor windings and bearings, decreasing motor life. The decision to oversize an electric motor to meet expected needs of future expansion should be economically evaluated against the option to either install separate pumps and motors when and if they are needed or to exchange the smaller pump and motor for a larger unit when and if it is needed.

Figure 8–61 Pump and pump shade near Othello, WA

Current legislation involving motor efficiencies should be consulted when selecting electric motors. Effective December 19, 2010, new pump motors from 1 to 500 horsepower that operate on three-phase AC power are required to meet minimum full-load efficiency standards established under the Energy Independence and Security Act of 2007 (EISA). EISA is an extension of the Energy Policy Act of 1992 (EPAct), which previously excluded pump motors from minimum efficiency requirements.

The National Electrical Manufacturers Association (NEMA) sets minimum efficiency standards for electric motors and classifies them as standard efficiency (SE), high efficient (HE), or as NEMA premium efficiency (NEMA Premium®). Under EISA, motors manufactured or imported after December 19, 2010, are required to meet minimum efficiency NEMA standards for HE motors. NEMA Premium motors exceed those standards. EISA minimum efficiencies do not apply to submersible motors. The sale and repair of SE motors manufactured or imported prior to that date continue to be permitted. More information about the NEMA Premium™ efficiency electric motor program and efficiencies can be found at NEMA sources. Appendix 8D contains further information on motor efficiencies.

Service factor is a multiplier that can be applied to the continuous operating horsepower rating to meet the requirements of infrequent, short-duration overloads (pump startup). The service factor should never be used for continuous operation. Service factor requirements for NEMA rated motors vary with horsepower, speed of rotation, and frame type. NEMA standards require the motor rating to be displayed on the motor identification plate if the service factor exceeds 1.0.

Motor efficiency varies with motor speed. For pumps in the field, motor speed can be found on the motor nameplate. Three-phase synchronous motor rotation is

Figure 8–62 Part-load motor efficiency range (source: U.S. Dept. of Energy: Buying an Energy Efficient Motor, DOE/GO–10096–314, Motor Challenge Program, USA, 2002)

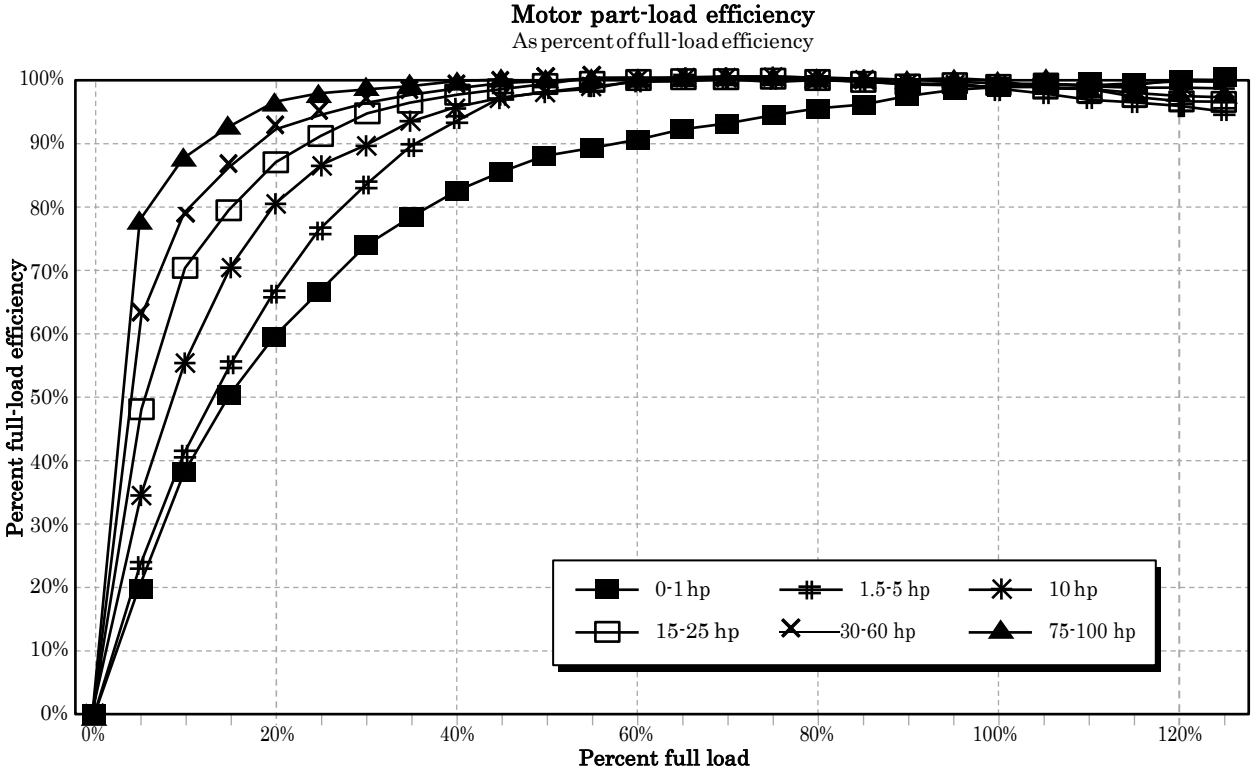

related to the line frequency and the number of poles per phase. The number of poles is always an even number (poles are in pairs). In the United States, line frequency is 60 Hertz. The synchronous speed (no-load motor speed) can be determined from equation 8–10:

$$S = \frac{120f}{n} \qquad \text{(eq. 8–10)}$$

where:
S = no load motor speed in r/min
f = AC line frequency in cycles per second (or Hz) = 60 (for United States)
n = number of poles per phase

Due to slippage, full load speeds are less than the no-load (synchronous) speed. No-load and typical full-load motor speeds are given in table 8–2. This table relates the number of motor poles to rotational speed and can be used with tables from appendix 8D to determine the minimum efficiency of an EISA motor.

(c) Electric motor controls

Note: Information on electric motor controls is for reference only. Electrical equipment, including wire, safety switches, breakers and fuses, motor starters, lightning arrestors, and grounding apparatus should be selected and installed by a qualified electrician and conform to all local, State, and national standards.

Table 8–2 Motor speed for electric motors operating on 60-Hz electricity

Number of poles	Speed (r/min)	
	Synchronous	Full Load
2	3600	3500
4	1800	1770
6	1200	1170
8	900	870
10	720	690
12	600	575
14	515	490

Note: Pump performance curves normally display the synchronous speed rather than the speed under load.

There are several choices to be made on the equipment necessary to start the electric pump motor, depending on the motor type, size, and desired features. Starting an electric motor quickly will often cause other concerns, such as cavitation, water hammer, and violent vibrations due to the purging of air from the system. Some of these problems can be eliminated by the use of purge valves, flow control valves, and other mechanical devices, but one of the best ways of overcoming this is to use either a soft start controller or a VFD. These devices allow the operator to set the acceleration time for the motor to ramp up to full speed.

A fused disconnect or circuit breaker, sized to the horsepower and voltage for the motor in use, is an essential component. Smaller motors, either single-phase or three-phase, can be started by the use of a simple manual starter switch that is rated for the correct full load amps (FLA). The larger motors, usually three-phase, will require either a magnetic contactor or a VFD to start the motor. If a magnetic contactor is used, it should also have the correct size of fused links for the motor FLA, for added safety from overcurrent and overheating. The circuit breaker or fuses that provide power to the motor are usually much larger than the fused links because it takes much more power to start the motor than for normal operating speed. The circuit breakers must be large enough for the startup current and still protect against catastrophic shorts, while the fused links act like time-delay fuses; the startup current exceeds their rating only for a second, which is not enough time to trip them. Motor currents in excess of the fused link rating for several seconds will cause them to trip, but not trip the main power breaker.

The wire size or gage to the pump motor and controls is an integral part of the system. Wire lengths, voltages, and currents are all considered in choosing a size and material in providing electrical power to start and operate the pump motor efficiently. The National Electrical Code recommends that the voltage drop in the combined feeder and branch circuit do not exceed 5 percent. The basic formula for calculating voltage drop is provided in equation 8–11:

$$VD = \frac{(2 \times L \times R \times I)}{1{,}000} \qquad \text{(eq. 8–11)}$$

where:
VD = voltage drop (based on conductor temperature of 75 °C)
L = one-way length of circuit, ft

R = conductor resistance in ohms/1,000 ft
I = load current, amps

Note: For a three-phase circuit (at 100% power factor) the voltage drop between any two-phase conductors is 0.866 times the voltage drop calculated by this formula.

The pumping system capability must be designed to safely handle the maximum expected flow rate at the desired pressure. However, there are many advantages to running a pump at partial speed, as pumps may not need to operate at full capacity of the pump to satisfy the demand on many occasions. When the water flow is reduced by a valve, the pump pressure increases (if the pump is rotodynamic) and often pressure-limiting valves must be installed to reduce the water pressure to usable levels. This excess pressure is energy wasted, and a better alternative is to reduce the pump speed.

VFDs solve many of the problems associated with startup and control of three-phase electric motors. They allow the user to program in an acceleration time, deceleration time, or both; program the motor speed; monitor the motor current; and a host of other options. They can utilize feedback from pressure or flow sensors to adjust the speed of the motor to optimize system pressure even though the water in the well changes elevation or the system is operating on a hillside where the required pumping pressure changes. VFDs also allow the user to run the system autonomously with the runtime based on a time clock, soil moisture sensors, or other devices. The user can start, stop, and monitor the system remotely from a computer located at home or office.

Warning: Remote or autonomous operation of a system of this type could cause personal injury or even death if the system started unexpectedly while it was being serviced, or if an unknown person was in the path of a traveling system.

(1) DC power, AC power, single-phase AC power, and three-phase AC power

Direct current (DC) is widely used in automotive, telecommunications, and industrial applications, but rarely used for a pumping application (excepting solar powered pumping. With DC power, the voltage remains constant with respect to common (ground), and current flow is in one direction only. It is typically used in only shorter applications, up to 700 feet.

Alternating current (AC) is the most common type of power used in residential, commercial, and industrial applications. AC power can be transferred over wires many miles in length, and the voltage can be easily stepped up or down using transformers. AC power in the United States operates such that the voltage goes from the maximum positive value to the maximum negative value, in a sinusoidal fashion at 60 Hertz. AC current also oscillates at the same rate (60 Hz) as the voltage, but not necessarily at the exact same time, depending on the resistance, capacitance, and inductance of the load. When measuring the voltage or current of an AC circuit with a common voltmeter or ammeter, only the root mean square (RMS) value of the voltage or current is measured instead of the peak value of the sine wave. Common RMS values for AC voltages are 115 and 230 volts for residential and 115, 230, and 460 volts for commercial and industrial. It is important to note that electrical transmission lines are at a much higher voltage, sometimes over 100,000 volts, and it is stepped down by transformers so that it is safer for the consumer to use. Power utilities use these high voltage levels to reduce the amount of energy lost to heat in moving the electrical power over long distances.

Single-phase AC power usually consists of 230 volts RMS and four wires: line 1 (L1), line 2 (L2), neutral, and earth ground. Single-phase AC motors are usually used on smaller pumping applications, from fractional horsepower up to about 10 horsepower, and where variable speed control is not necessary.

Three-phase AC power usually consists of either 230 or 460 volts RMS and 5 wires; L1, L2, line 3 (L3), neutral, and earth ground. In the larger horsepower motors, the 460-volt system is more economical because the current, along with the switchgear and wire, only needs to be half as large as the 230-volt system for the same size motor. Three-phase AC motors are readily available in sizes from fractional to 200 horsepower or more, are easily reversible, and are easily adapted to soft-start circuits or variable-frequency drives.

(2) Conversion of single-phase to three-phase power

Sometimes three-phase power is simply not available to the pump location, or the addition of the third phase is cost prohibitive. Generally, there are three methods of converting single-phase electrical power to three-phase power for pump motor operations: static phase converters, rotary phase converters, and VFDs.

The static phase converter (fig. 8–63) typically consists of a set of capacitors matched to the motor size and creates a phantom phase to start the three-phase motor, then drops out during normal motor running. This scenario gives the motor full power to startup, but gives only 70 to 80 percent of the rated horsepower after the motor gets up to speed. It normally works only on motors that are wye-wound (as opposed to delta-wound) motors. The static phase converter is initially the most economical among the three methods described above, but may not be the most cost-effective method because of the low motor efficiency. The use of a static phase converter may cause motor overheating during extended full-load operations.

The rotary phase converter (fig. 8–64) consists of an additional three-phase induction motor slightly larger than the pump motor, plus some additional components The three-phase induction motor is started on the single-phase power through a capacitor configuration similar to that of the static phase converter, and then runs at full speed on two of its three windings. The third winding then generates the third phase of power to feed the pump motor. The rotary phase converter does provide full startup and full run power to the pump. The initial cost of the rotary converter is higher than that of the static converter, but provides full balanced power to the pump motor and works with both delta and wye-type motors. The efficiency of the rotary converter is similar to that of the static converter but may be more cost effective over time because the expected lifetime is longer and maintenance is less than that of the static-converter-based system. The required space is somewhat larger because of the idler motor that must be protected from the weather.

Some variations on these types of phase converters are that they consist of electronic circuits, specially wound motors, or both that allow the larger horsepower motors to run from single-phase power at much higher torque and efficiency than the older standard types.

The VFD can also be an important part of a phase conversion system, as well as pump speed control. Advances in VFD technology, as well as price declines, have made the VFD a preferred choice in phase conversion. Because the VFD converts the incoming AC power into DC and then sends this power to the pump

Figure 8–63 Static-phase converter center-pivot irrigation system near Ellensburg, WA

Figure 8–64 Rotary-phase converter center-pivot irrigation system near Twin Falls, ID

in pulses, in three true phases, which are proportional to speed in both frequency and voltage, the overall efficiency of the system, especially at lower operating speeds, is dramatically improved. The power to the pump motor is not a true sinusoidal waveform as with the incoming power or other types of phase converters, but is a bipolar DC voltage that is turned on and off with varying times (pulse width modulated) that essentially provides the same motion in the motor as the AC power would. When using a VFD for phase conversion, it is important to note that the size of the VFD must be increased by a factor of one-third over the FLA of the pump motor. This is needed to provide the required electrical current to each of the motor's three inputs at rated maximum horsepower from two wires connected to the original power source.

The VFD eliminates the need for magnetic contactors and motor-overload protectors, and provides for programmable running speed, acceleration and deceleration times, and remote control operation. VFDs can induce harmonics in the supply power grid caused by the pulse-width modulation (PWM) regulating technique that they generally use. The frequency of this harmonic is dependent on the frequency of the VFD's programmable carrier signal and may or may not cause problems with other noise sensitive electrical equipment in the vicinity, such as computers, communications equipment, and other electronic devices. There are line reactors available to help if this phenomenon is a problem. VFDs can also cause an audible noise that comes from the frame of the motor, depending on the carrier frequency of the VFD and the natural frequency of the motor housing and mounting. If severe, the noise can be a nuisance, and over time can cause deterioration of the motor windings and laminations.

With the VFD, the operating range of motor speed should still be selected as close as possible to that of the ideal pump speed. Operating enclosed motors at substantially slower speeds than rated (20–40%), will result in motor overheating and a shortened life span. Auxiliary cooling and ventilation may be necessary for motors operated by VFDs operating at these slower speeds. An electric motor controlled by a VFD may still require a mechanical speed-reduction drive system between the motor and the pump if a match between the rated motor speed and the pump speed is not possible.

When using any of the methods of phase conversion, all electrical control equipment needs to be located in a protected building or enclosure to protect it from the rain, direct sunlight, and rodents, while maintaining adequate ventilation (possibly even air conditioning).

(d) Internal combustion engines

There are a number of factors in selecting an internal combustion engine for a pumping application, including portable or stationary, air cooled or water cooled, fuel type, speed, size, efficiency, emissions, maintenance costs, expected life, and initial cost.

Manufacturers have developed performance curves for their engines. These curves show horsepower rating at various speeds and are used as a basis for engine selection. When the engine manufacturer conducts test to determine the horsepower rating of an engine, a procedure standardized by the Society of Automotive Engineers (SAE) is used to allow the comparison of the horsepower curves of the various sizes and makes of engines. The test is run under laboratory conditions with a stripped engine, and the power delivered at the flywheel is determined by means of a de Prony brake or dynamometer. In stripping the engine for the test, accessories and equipment, such as cooling fans, generators, air cleaners, and mufflers are removed. The engine is then connected to the dynamometer and run under ideal conditions with the dynamometer recording the horsepower output at various operating speeds. The horsepower, as determined by the dynamometer for various operating speeds, is then plotted in the form of a curve which the manufacturer may label either bhp or dynamometer horsepower, which are equivalent terms (fig. 8–65).

Since the horsepower output as determined by the manufacturer's test is for laboratory conditions with a stripped engine, this curve does not represent the horsepower output of that engine with power-consuming accessories such as fans, generators, and water pumps. These accessories may consume as much as 10 percent of the horsepower output of the engine. The dynamometer horsepower curve must be corrected to reflect the power loss caused by the use of accessories. Because of the characteristics of the internal combustion engine, it is necessary to further correct the horsepower curve to compensate for the continuous loading that is required in irrigation pump-

ing. The effect of continuous loading will decrease the bhp another 15 to 20 percent. Because altitude and air temperature affect horsepower output and laboratory tests are based on sea level and 60 degrees Fahrenheit temperature, make corrections for most irrigation pumping installations. General rules for elevation and temperature corrections are to reduce the continuous load rating 3 percent for every 1,000 feet above sea level and an additional 1 percent for every 10 degrees Fahrenheit above 60 degrees Fahrenheit.

The best operating load for an internal combustion engine is at or near the continuous bhp curve. Running an engine under lighter loads usually results in poor fuel economy for the water pumped, because a proportionally larger amount of horsepower is used in overcoming engine friction and throttling losses. Running at wide-open throttle invites engine trouble as well as excessive fuel consumption. The main object in irrigation pumping is to pump as much water as possible for the fuel used. Therefore, operating the engine near its highest possible load on an economy fuel mixture is the best way to accomplish this objective.

Figure 8–65 Horsepower output of an internal combustion engine

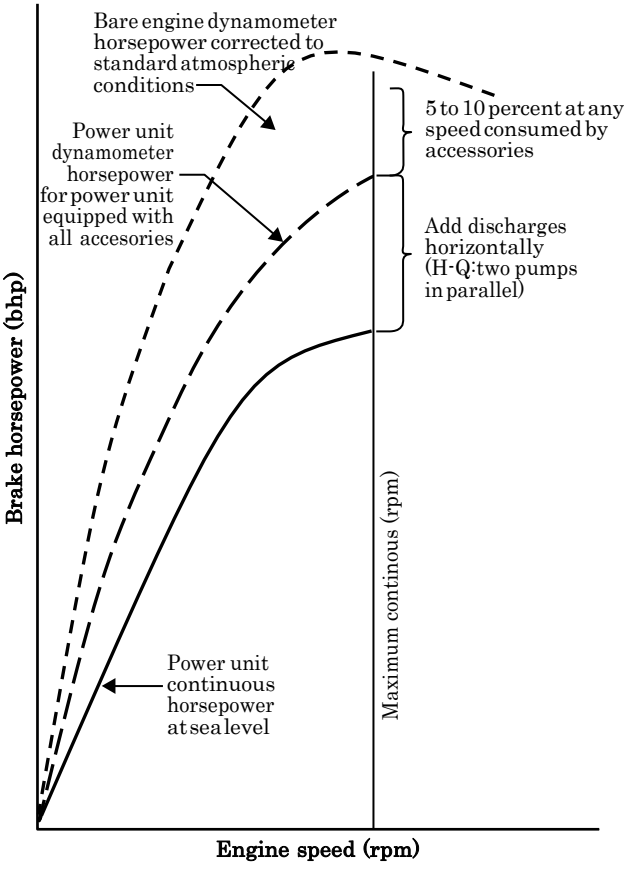

Irrigation pumping plants operate for long periods without supervision. Therefore, safety controls should always be installed to protect the engine and pump. The power unit should have oil pressure and water temperature ignition cutoff switches that automatically shut the engine off if the oil pressure drops or the coolant temperature becomes excessive. A pump-water pressure switch should also be used to protect against loss of prime or a drop in the discharge pressure. Many manufacturers offer governors or overspeed cutout switches to limit the engine r/min or shut the engine off in case of a sudden drop in load.

Liquid-cooled engines can be cooled by either a radiator or a heat exchanger. The heat exchanger can recover up to 8 percent more horsepower than the radiator because it does not require the engine to run a fan to pull air through the radiator. The heat exchanger needs to be sized to the engine for adequate cooling even on the hottest days, but not so large that the engine overcools and forms excessive internal sludge. The manufacturer's recommendation on engine temperature should be followed closely to prevent problems from overheating or underheating, and a properly rated coolant thermostat be used to regulate coolant temperature.

Internal combustion engines can be designed to run on one or several types of fuels. Fuel chosen will probably be determined by availability and cost at any one location. Liquid petroleum gas (LPG) and natural gas are very similar fuels except that natural gas has slightly lower energy content. Natural gas would be piped directly to the engine, while LPG installations require high-pressure storage tanks and periodic refilling. Gasoline and diesel engines are quite common, and both require fuel storage tanks and periodic refilling. Diesel engines generally cost more initially, but the maintenance costs are normally less and the expected lifetime normally longer. During frigid winter weather, some difficulties may be encountered with diesel as a fuel; however, very few irrigation systems are operated in the winter. Fuel price volatility, fuel

availability, and personal preference all influence the type of fuel source chosen.

Both the LPG and natural gas engines normally have lower exhaust emissions than gasoline or the diesel engines. Because the fuel is pressurized, they require automatic fuel shutoff valves in case the engine should stop running unexpectedly or due to failure. All of the internal combustion engines will require periodic inspection and maintenance to keep them in good and efficient operational condition.

(1) Resonant speed

On engine drive systems, it is not uncommon for one or more resonant speeds to exist between zero r/min and the operating speed; these are the natural frequencies of the system. Continued operation at a resonant speed will result in torsional vibrations that can be damaging to all components of the system. The most common indication of torsional vibrations is an unusual rumbling or clattering noise from the gear drive at a sharply defined speed. Transition through a resonant speed range to operating speed is not normally damaging but operation close to a resonant speed should be avoided. To avoid operation at a resonant speed, it may be necessary to change the elastic characteristics of the rotating components, install a flexible coupling, or change the speed of the engine with respect to the pump (change gear ratio).

(e) Tractor power

The farm tractor is probably the least desirable type of power source for irrigation pumping. It is often used on small systems where irrigation is not needed continuously during the growing season. If a farm tractor is to be used for irrigation power, it must be in good mechanical condition and with sufficient power to operate the pump at the required capacity without running at full throttle. The irrigation pump is a constant load machine and differs from normal farm tractor work where the load is applied intermittently. An engine large enough for a tractor may not have sufficient power for pumping, as the horsepower rating of the tractor is based on intermittent operation.

The power from a farm tractor may be transmitted to the pump through either a belt drive or a power takeoff. Tractor manufacturers usually recommend operating at 85 percent of the maximum belt horsepower output and 75 percent of the maximum drawbar horsepower for continuous operation. The power takeoff is the type of drive most commonly used with farm tractor power for irrigation pumping. As there is some loss through the power takeoff shaft with speed increases, most authorities recommend limiting the power takeoff power delivered to the irrigation pump to 75 percent of the maximum belt horsepower output. A lower percentage should be used for older tractors, possibly dropping to 50 percent or lower for tractor engines in only fair mechanical condition.

(f) Solar power

Photovoltaic (PV) power is produced directly by sunlight shining on an array of modules, requires no moving parts, and is extremely simple and reliable.

Generally, many individual cells are combined into modules sealed between layers of glass or transparent polymer to protect the electric circuit from the environment. These modules are capable of producing tens of watts of power. Several modules are then connected in an array to provide enough power to run a motor-pump set in a pumping system. This array is usually mounted on a simple, inexpensive structure oriented toward the sun at an inclination angle close to the latitude of the site. This ensures that ample energy from the sun will shine on the array during all seasons of the year.

A PV-powered water system is basically similar to any other water system. All PV-powered pumping systems have, as a minimum, a PV array, a motor, and a pump. The array can be coupled directly to a DC motor or, through an inverter, to an AC motor. For both AC and DC systems, a battery bank can be used to store energy or the water can be stored. The motor is connected to any one of a variety of variable-speed pumps.

Because a pump powered by a PV array supplies water during sunlight hours only, batteries or other storage system may be necessary. Introducing batteries into the photovoltaic-powered pumping system may decrease its reliability and increase its maintenance requirements. The inclusion of batteries is justified when the maximum yield of the well during sunlight hours is insufficient to meet the daily water requirement.

In lieu of batteries, a tank or reservoir maybe used to store water for low sunlight periods. Water storage is an important consideration. Three days' worth is a typical storage size, regardless of the intended use for the water. But local weather conditions and water use should determine the optimum size to meet the needs.

For efficient operation, the voltage and current characteristics of the pump need to match those of the array. There are three basic ways in which a pump and controller can be connected to a PV array. The simplest is to directly couple the pump and array. Another method is to interpose a battery. The third is to use an electronic controller. The operation characteristics of centrifugal pumps are reasonably well matched to the output of PV arrays. Therefore, the two are most often directly coupled. This direct coupling requires that gear ratios, motor speed, and voltage and pump stage characteristics be carefully chosen for proper operation. Array matching to pump characteristics is complicated by the limited number of pump sizes. Electronic controls can enhance performance of a well-matched array-pump system by 10 to 15 percent. These controls are frequently used in locations with fluctuating water levels or weather characteristics.

The operating characteristics of positive displacement or so called volumetric pumps are poorly matched to the output of PV arrays. Batteries can improve this match and allow the motor to be started at low sun levels. However, batteries have drawbacks, as outlined above. Maximum power controllers (MPCs) are usually used with volumetric pumps. They employ intelligent electronic devices to transform the array output to match pump power requirements. These controls allow operation over a wide range of irradiance levels, water levels, and flow rates. In addition, they solve the volumetric pump starting problem. Electronic controls typically consume four to seven percent of the array's power output.

(1) Daily insolation levels

The power produced by a PV system depends on the insolation (incoming solar radiation) available. This insolation varies for each site and month to month, due to seasonal and climatic variations. Insolation is usually measured in sun-hours (1 sun hour —1 kWh/m^2, about equal in intensity to sunshine on a clear summer day at solar noon). Not every hour of sunlight counts equally to the daily solar insolation. Noon-time hours, when the angle of incidence of solar radiation is close to perpendicular, are weighted higher than morning and evening hours of sunlight.

If the pumping rate needs stay the same year-round, solar design calculations should be based on the month with the lowest insolation levels to ensure adequate water throughout the year. If water is to be used for crop irrigation, the months with the lowest insolation often correspond to those in which crop demand for water is lowest; thus, calculations do not need to be as conservative as those for drinking water only. If water consumption varies throughout the year, the system design should be based on the ratio of water required to insolation available. The month in which this ratio is largest will determine the PV array size. When determining irradiation for a specific location, data should be obtained from the nearest available meteorological station and allowance made for any known local climate differences.

(2) Orientation and location of photovoltaic arrays

Orientation refers to the position of a surface relative to true south (for sites in the northern hemisphere). Although photovoltaic arrays that face within 15 degrees of true south receive almost full sunshine, any unobstructed, generally south-facing surface is a potential array location. An array should not be shaded by obstructions like buildings or trees. Obstructions that cause no interference in summer may cast long shadows when the winter sun is low in the sky.

(3) Tilt of photovoltaic arrays

Module surfaces tilted at a right angle to the sun's rays catch the most sunshine per unit area. An angle equal to the local latitude in degrees (tilted up from the horizontal) is the closest approximation to that tilt or slope on a year-round basis. If the water needs are not the same throughout the year, a higher or lower array-tilt angle may be advantageous and lead to better system performance. For example, if the summer months have the highest water needs, an array tilt of 15 degrees less than the latitude angle is recommended. Similarly, if the winter months have the highest water needs, increasing the tilt by 15 degrees should be considered. The daily total insolation incident on a south-facing surface tilted at an angle equal to the local latitude during the winter season is shown in figure 8–66. Meteorological stations, universities, government agencies, or other information depositories in the local area should be contacted to determine the availability

of accurate insolation data. Charts similar to figure 8–66 can be obtained from the Southwest Technology Development Institute or the National Center for Photovoltaics.

Seasonal values of solar radiation are adequate for preliminary design and costing purposes. Note that the number of sun-hours at a site is different from the total number of hours the sun is shining. The worldwide yearly average insolation is 5 sun-hours (or 5 kWh/mP/day). Base your design on the site closest in both distance and climate conditions to your own.

(4) Sizing systems and selecting

The term sizing means determining the required size or capacity of all major photovoltaic system elements. The system will need to be sized so that it will be able to satisfactorily serve the intended load. This section outlines a simple method intended to assist potential users in making rough estimates. These estimates should be within 20 percent of the true value for systems with some sort of voltage regulation (without

Figure 8–66 Winter tilt angle equals latitude +15° daily total solar radiation on a tilted surface in kW/m²/day

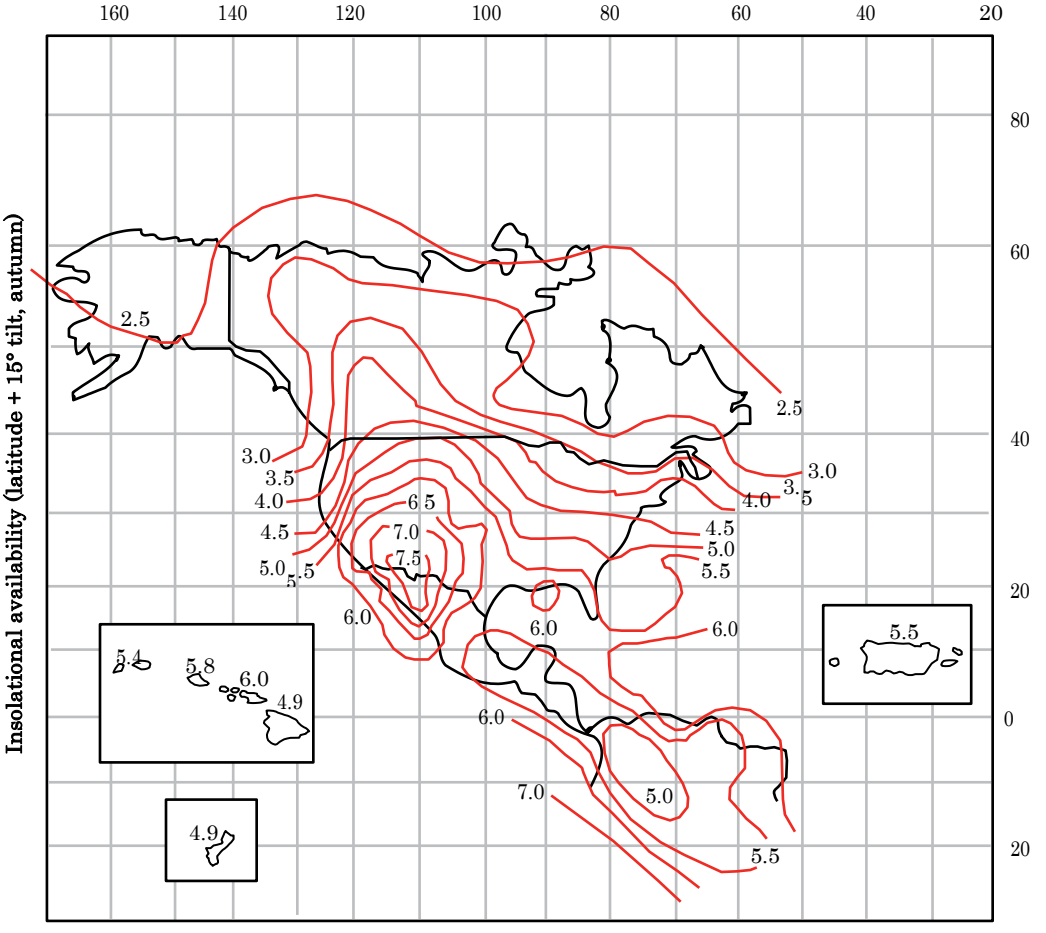

Autumn-tilt angle equals the latitude +15°
daily total solar radiation incident on a surface in kWh/m²/day

voltage control, as is the case for a direct-coupled system, array efficiency can be decreased by as much as 50%). Essentially, the process is to calculate the average daily energy load in kilowatt hours for the peak month in the season of use:

1. *Calculate the hydraulic load*. The hydraulic load is directly proportional to the daily water volume-head product.
2. *Estimate system losses*. This includes mismatch effects and losses in the wires, electronic controls, pump, and motor. The losses in the pump (40–60%) and motor (10–20%) dominate. Use these losses to determine an estimated overall horsepower requirement for the system.
3. *Determine local insolation*. The appropriate amount of input solar radiation (insolation) to the photovoltaic system at the application site may be obtained from charts similar to figure 8–66. Average daily values for spring, summer, autumn, and winter are included in the charts.
4. *Determine the critical design period*. The available solar insolation varies as the seasons change, as may the water requirements or water level in the well. For this reason, the worst combination of load and insolation must be identified. It is this combination that determines the size of the system.

   This worst combination can be identified by constructing a table of average seasonal insolation and load values and then determining the season with the lowest ratio of insolation to load. This value is then used in the next step.
5. *Calculate the array power*. PV arrays are usually rated by specifying their output in watts under standard conditions of 100 milliWatt per square centimeter insolation with the cell temperature at 25 degrees Centigrade. This output is, however, adversely affected by temperature, falling by approximately 0.57 watts per degree centigrade above this standard. Since normal cell temperature is approximately 30 °C above ambient air temperature (which, in turn, is often well above 25 °C), actual array output may be significantly less than rated power.

Centrifugal pumps achieve maximum efficiency only when operating at design capacity; when pumping at less than design capacity, the efficiency is less. Since the power output of a PV system is constantly changing, the long-term average efficiency of a centrifugal pump is hard to predict, but will be less than its rated efficiency at design capacity. In contrast, the efficiency of a positive displacement pump is constant throughout its operating range. The following section describes some of the interactions among insolation, PV array output, and pumping efficiency.

(5) Effect of varying solar radiation on output

A major factor in sizing systems is the nature of solar radiation—it changes throughout the day, is affected by the weather, and changes from season to season. This variation in input power does not greatly affect systems that are able to deliver water in proportion to the ambient solar intensity; they produce less water when the solar level is low and produce more when the solar level is high. This evens out over time. This variation does affect pumping systems where water output is nonlinear with solar intensity (e.g., the water output does not vary directly with the speed at which the pump operates). The implications for output are complex. In addition, they highlight the importance of properly defining the desired average daily water delivery in the purchase specifications and requiring a well-defined acceptance test.

(6) Daily variations

The most important characteristic of insolation is its diurnal pattern. The expected power available to a fixed flat-plate array over a 24-hour period under clear skies is represented by a hill-shaped curve that increases from sunrise to noon and decreases thereafter until sunset. In general, positive displacement pumps are linear with respect to their input-output performance and, when coupled to a "smart" electronic controller, can fully utilize the available solar radiation. Centrifugal pumps have nonlinear efficiency characteristics, and hence, water production decreases when these pumps are operated away from an optimum design condition. Manufacturers should take these effects into account when quoting average daily flow rates. Figure 8–67 illustrates these variations.

Weather variations—Cloudy weather (intermittent clouds) and overcast skies (solid cloudy ceiling) considerably reduce the amount of insolation and thus the output of photovoltaic systems (fig. 8–68). Solar insolation tables include adjustments for weather variations because these variations are normally present as average daily levels over a full month. Therefore,

Figure 8–67 Example of average seasonal solar radiation values for Nowheresville, USA

Solar radiation for flat-plate collectors facing south at a fixed Ttilt (kWh/m²/day), uncertainty +9%

Tilt (deg.)		Jan	Feb	Mar	Apr	May	June	July	Aug	Sept	Oct	Nov	Dec	Year
0	Average	1.1	1.8	2.8	3.9	4.9	5.3	5.4	4.8	3.8	2.4	1.3	1.0	3.2
	Min/Max	0.9/1.4	1.3/2.3	2.3/3.4	3.3/4.5	4.0/5.6	4.4/6.1	4.6/6.2	4.0/5.6	3.3/4.5	1.9/2.9	1.1/2.6	0.9/1.3	3.0/3.4
Latitude –15	Average	1.7	2.4	3.4	4.3	5.0	5.2	5.4	5.1	4.7	3.3	2.0	1.5	3.7
	Min/Max	1.1/2.5	1.4/3.5	2.5/4.5	3.4/5.2	4.0/5.8	4.2/6.0	4.5/6.3	4.2/6.2	3.7/5.7	2.3/4.3	1.4/2.8	1.1/2.5	3.3/3.9
Latitude	Average	1.9	2.6	3.4	4.2	4.7	4.7	5.0	4.9	4.7	3.5	2.1	1.7	3.6
	Min/Max	1.2/2.8	1.4/3.8	2.5/4.7	3.3/5.0	3.7/5.4	3.9/5.5	4.1/5.8	4.0/6.0	3.7/5.8	2.4/4.6	1.5/3.1	1.1/2.9	3.3/3.9
Latitude +15	Average	2.0	2.6	3.3	3.8	4.1	4.1	4.4	4.4	4.5	3.5	2.2	1.8	3.4
	Min/Max	1.2/3.0	1.3/3.9	2.3/4.6	3.0/4.7	3.3/4.8	3.4/4.8	3.6/5.1	3.6/5.4	3.5/5.6	2.3/4.6	1.5/3.2	1.1/3.2	3.1/3.7
90	Average	1.8	2.2	2.6	2.7	2.7	2.5	2.7	3.0	3.4	2.9	1.9	1.6	2.5
	Min/Max	1.0/2.8	1.1/3.5	1.8/3.7	2.2/3..3	2.2/3.0	2.2/2.9	2.3/3.1	2.5/3.7	2.6/4.2	1.9/3.4	1.3/3.0	1.0/3.1	2.3/2.8

weather variations do not, on the average, affect the water delivery of linear systems (e.g. positive displacement pumps). However, centrifugal pumps are considerably affected. When sizing photovoltaic-powered centrifugal pumps in areas that experience weather conditions of generally decreased or overcast insolation (fog, haze, dust, dispersed clouds, or smog), use a maximum value of 80 milliWatt per square centimeter instead of 100 milliWatt per square centimeter for the daily solar profile. This lower peak value at noon, coupled with the average daily insolation level (kWh/m^2/day) in the solar tables, should account for those weather variations.

Seasonal variations—Since there are seasonal differences in the daily path sun across the sky, the amount of solar energy striking a fixed array will vary seasonally. Note that the seasonal variation effects described in this paragraph are due only to annual changes in sun angle and are distinct from typical seasonal changes in insolation due to changing weather patterns. The output of a positive displacement pump depends on the amount of total daily solar insolation striking the array. By contrast, the output of a centrifugal pump is affected by the peak value of the solar insolation as well as by the amount. For a fixed tilt-angle array, peak power will vary seasonally as the sun's angle with respect to the array changes. Purchase specifications should require manufacturers to account for this effect and the other effects described in this section when presenting expected water output. The techniques presented earlier did account for these effects.

More information on the design of photovoltaic design examples can be found from Sandia National Laboratory, which has published several manuals with costing procedures and design examples.

(g) Wind power

Windmills can still be used to great advantage when power is not available at a site. The most important factor is to provide adequate storage to carry over during periods of little or no wind. Windmills also require frequent checking and maintenance (fig. 8–69).

(1) Wind generator powered pump

Wind generators or turbines can be used to power low-volume pumps. These systems are expensive and have the same disadvantage as windmills in that they depend on wind being available to pump water. They may be more reliable than windmills because there are

Figure 8–68 Diurnal pattern of daily solar insolation

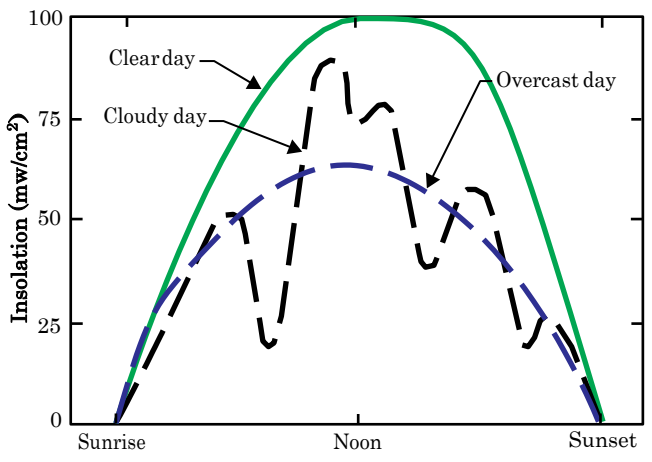

Figure 8–69 Typical farm windmill near Lubbock, TX

less mechanical components to go wrong. It may also be possible to pump water from deeper depths. Figure 8–70 illustrates a wind generator (turbine). This small generator delivers 12- or 24-volt power and might be used with the same type of pumps as solar-powered pumps, or might be used in conjunction with solar power.

(h) Power requirements

To determine the actual horsepower of the power unit used in driving a pump, it is necessary to know the efficiency of the pump, the type of drive, type of power unit, the head under which the pump operates, and all losses in the piping system. Pump manufacturers normally provide performance curves for their pumps that give information such as discharge, head pressure, required horsepower, and efficiency. These parameters can be tested under field working conditions.

The efficiency of a horizontal centrifugal pump and a vertical centrifugal pump mounted in a sump includes only the losses in the pump proper. Except for the friction losses, the efficiency of a vertical-mount submerged centrifugal pump includes the losses in the pump plus those incurred from the suction to the end of the pump discharge. Similarly, except for column pipe friction losses, efficiency of a deep-well turbine pump includes all losses from the intake at the end of the bowls to the discharge outlet. The column pipe friction losses for vertical mount centrifugal pumps and for deep-well turbine pumps are included in the total dynamic head calculation. If the power unit and pump are not directly connected, there is a drive loss that must be considered. These losses can be established well enough to enable accurate assumptions to be made for the desired type of pump drive.

Figure 8–70 Wind turbine near Milford, UT

The useful work done by a pump or the water horsepower (whp) required can be calculated using equation 8–3.

The whp represents the power that would be required to operate the pump if the pump and drive were 100-percent efficient. The bhp required to operate a pump is determined using equation 8–12:

$$\text{bhp} = \frac{\text{whp}}{(\text{pump efficiency})(\text{drive efficiency})} \quad \text{(eq. 8–12)}$$

The term bhp can occasionally be misunderstood. Power unit manufacturers use the term to refer to the output that the engine or motor delivers to its drive shaft. Pump manufacturers often refer to bhp as the power that is applied to the pump. Confusion can result because there is often a drive (e.g., a right-angle gear drive, belt drive) that has its own inefficiencies. When reading a pump curve that references bhp, ensure that drive inefficiencies are accounted for before sizing the power unit.

(1) Power requirements for electric motors

Electric motors for irrigation pumps are selected for 100 percent duty rating (continuous operation); therefore, the required bhp to operate the pump plus losses in the drive is the size of the electric motor needed. The efficiency of an electric motor must be considered in determining power consumption. These formulas apply:

$$\text{input horsepower, ihp} = \frac{\text{bhp}}{(\text{motor efficiency})} \quad \text{(eq. 8–13)}$$

Or, expressed in kilowatts, the power input to the motor is expressed as:

$$\text{kw input to motor} = 0.746 \times \text{ihp} \qquad \text{(eq. 8–14)}$$

$$\frac{\text{kw-hr}}{\text{1000 gallons pumped}} = \frac{(0.00314)(\text{TDH})}{(\text{pump efficiency})(\text{drive efficiency})(\text{motor efficiency})} \qquad \text{(eq. 8–15)}$$

$$\frac{(\text{kw-hr})}{(\text{acre-ft})} = \frac{(1.024)(\text{TDH})}{(\text{pump efficiency})(\text{drive efficiency})(\text{motor efficiency})} \qquad \text{(eq. 8–16)}$$

Approximate efficiencies of modern electric motors operating at full load are given in table 8–3. Older motors exhibit lower efficiencies. More information about motor efficiency is given in appendix 8D.

Table 8–3 Approximate efficiencies of electric motors operating at full load

Efficiencies for standard efficiency motors				
Motor size (hp)	900 r/min	1,200 r/min	1,800 r/min	3,600 r/min
10	87.2	87.3	86.3	86.3
15	87.8	87.4	88.0	87.9
20	88.2	88.5	88.6	89.1
25	88.6	89.4	89.5	89.0
30	89.9	89.2	89.7	89.2
40	91.0	90.1	90.1	90.0
50	90.8	90.7	90.4	90.1
75	91.7	92.0	91.7	90.7
100	92.2	92.3	92.2	91.9
125	92.9	92.6	92.8	91.6
150	93.3	93.1	93.3	92.0
200	92.8	94.1	93.4	93.0
250	93.1	93.5	93.9	92.7
300	93.1	93.8	94.0	93.9

Overall pumping plant efficiency (OPE) is the ratio of the energy needed by the pump to the energy input to the motor, and expressed in percent by the equation 8–17. Maintaining high overall pumping plant efficiency is important in reducing power costs.

OPE is calculated as:

$$\text{OPE} = \left(\frac{\text{whp}}{\text{ihp}}\right)(100) \qquad \text{(eq. 8–17)}$$

Drive efficiency is dependent on the type of drive. The following drive types are found on irrigation systems: close-coupled or direct drive, gear box, shaft, and belt drives (v-belt and flat belt). Ranges for drive efficiency are shown in table 8–4.

Overall pumping plant efficiency does not include the electrical line losses between the electric motor and the electric power meter. Long power lines for delivery of electricity can result in considerable power loss. If these losses are to be calculated, consult the appropriate electrical references.

(2) Power requirements for internal combustion engines

Internal combustion engines are rated on the bare engine dynamometer horsepower developed at the shaft; therefore, the efficiency of the unit does not enter into computations. The rated horsepower of the engine must be in excess of the required horsepower to drive the pump to offset the losses due to accessories and provide for continuous operation.

Example 8–9 shows a method of computing the bhp required by an electric motor to operate an irrigation pump. Example 8–10 shows the method of computing the engine size for a nonelectric pumping plant along with necessary corrections for altitude, temperature, and continuous operation.

623.0809 Cavitation, Water Hammer, Net Positive Suction Head, and Specific Gravity

(a) Net positive suction head

Net positive suction head (NPSH) is the maximum column of water that can be lifted in a pipe under a given set of conditions. It is the head that causes liquid to flow through the suction piping and enter the eye of the pump impeller. The units for NPSH are typically in feet of pressure, and the value is expressed in absolute, not relative, pressure.

Required NPSH (NPSHR) is a function of the pump design and varies with the capacity and speed of the pump. It is the head that must be present at the eye of the impeller for the pump to operate normally. A pump typically requires greater NPSH as the flow rate increases. The value of NPSHR is supplied by the manufacturer.

Available NPSH (NPSHA) is a function of the system in which the pump operates; it represents the energy level in the water over vapor pressure at the pump inlet. The available NPSH for a pump at a given operating point must equal or exceed the required NPSH or cavitation occurs.

Ensuring that the NPSHA is greater than the NPSHR is a critical design requirement for pump suction lines. When the NPSHA is less than the NPSHR the fluid will cavitate; this can cause permanent damage to the pump. Avoiding this situation is the responsibility of the pumping plant designer.

Suction lift is a misleading term since rotodynamic pumps are not capable of suction; the liquid must be pushed into the eye of the impeller. In cases where the water level is below the elevation of the impeller, the push is provided by atmospheric pressure. At sea level, atmospheric pressure is ideally capable of pushing water up 33.9 feet (this figure assumes that a perfect vacuum is formed in the suction piping), but as elevation above sea level increases, the height water can be pushed decreases (table 8–5). Atmospheric pressure is also affected by local weather conditions (e.g., high

Table 8–4 Drive efficiency ranges

Drive type		Drive efficiency (%)	Comments
Direct drive		100	Includes close-coupled or vertical shaft (turbine or vertical mounted centrifugal). Turbine pumps with longer shafts and higher horsepower do exhibit slightly lower efficiencies, but in most cases these losses are negligible.
Right-angle gear		>95	Common to transmit power from a combustion engine to a turbine pump.
Power take-off		varies	Depends on configuration: U-joints, shaft type, gear speed increasers, alignment, spur gears, and belts.
Belt drives	V-Belt	90–95	Efficiencies can be lower. Varies depending on slippage, type of pulley, type of belt, pulley size, distance between pulley centers, pulley alignment, pulley wear, twist used, and number of idler pulleys. Slippage can vary with temperature changes. Belts must be retensioned periodically (particularly after initial installation) to maintain efficiency
	Flat Belt	70–80	Historically important but use is not widespread today. Slippage can be higher than other belts. Factors that reduce efficiency are the same as for V-belts.

Example 8–9—How to determine motor size and pumping plant efficiency

Given:
An 1,800 r/min electric motor-driven pump with a V-belt drive is required to deliver 650 gallons per minute at 145 TDH. Assume that the pump efficiency is 75 percent and the V-belt drive efficiency is 90 percent.

Find:

- Water horsepower output of the pump
- Motor size in horsepower
- Input power to motor in kilowatts
- Power consumption in kilowatts per 1,000 gallons pumped
- OPE in percent

Solution:

Water horsepower:

$$\text{whp} = \left(\frac{(\text{gpm})(\text{TDH})}{3{,}960}\right)$$

$$= \left(\frac{(650)(145)}{3960}\right)$$

$$= \underline{\underline{23.8\,\text{hp}}}$$

Motor size:

$$\text{bhp} = \frac{\text{whp}}{(\text{pump efficiency} \times \text{drive efficiency})}$$

$$= \left(\frac{23.8}{(0.75 \times .90)}\right)$$

$$= \underline{\underline{35.26}}\,\text{hp}$$

Select a 40-hp motor. The motor efficiency is 90.1 percent from table 8–e. Drive efficiency is 90%

Example 8–9—How to determine motor size and pumping plant efficiency—continued

Electric input to motor:

$$\text{ihp} = \frac{(\text{bhp})}{\text{motor efficiency}}$$

$$= \frac{(35.26)}{0.901}$$

$$= 39.13 \text{ hp}$$

$$\text{kw input to motor} = (\text{ihp})(0.746)$$

$$= (39.13)(0.746)$$

$$= \underline{\underline{29.19}}$$

Power consumption in kilowatts per 1,000 gallons:

$$\frac{\text{kwh}}{1000 \text{ gallons pumped}} = \frac{(\text{TDH})(0.00314)}{(\text{pump efficiency})(\text{drive efficiency})(\text{motor efficiency})}$$

$$= \frac{(145)(0.00314)}{(0.75)(0.90)(0.901)}$$

$$= \underline{\underline{0.749}}$$

Overall pumping plant efficiency:

$$\text{OPE} = \left(\frac{\text{whp}}{\text{ihp}}\right)(100)$$

$$= \left(\frac{23.8}{39.13}\right)(100)$$

$$= \underline{\underline{60.8\%}}$$

Example 8–10—How to determine engine size needed for pumping

Given:
A centrifugal pump powered by a direct-drive gasoline engine must deliver 480 gallons per minute at a total dynamic head of 180 feet. The pump efficiency is 73 percent, and the drive efficiency is 100 percent (direct drive). A heat exchanger is used instead of an engine radiator. Based on the manufacturer's information, there a 5 percent loss in the heat exchanger, the daytime temperature is 90 degrees Fahrenheit and this particular motor lose 1 percent of efficiency for every 10 degrees above 60 degrees Fahrenheit, and the pumping site is 2,000 feet above sea level.

Find:
- The size of engine required.

Solution:
Corrections for derating of engine:

Continuous load operation	20%
Accessories—generator, air cleaner (heat exchanger for cooling)	5%
Elevation – 2,000 ft @ 3 percent/1,000 ft above sea level	6%
Temperature: 90 °F–60 °F = 30 °F × 1%/10 °F	3%
Total deduction	34%

Solution:

$$\text{Engine size required} = \left(\frac{\text{bhp}}{1.00 - \text{efficiency loss deduction}}\right)$$

$$= \left(\frac{29.89}{1.00 - 0.34}\right)$$

$$= \underline{\underline{45.28}}$$

and low pressure weather patterns, which can affect the values in table 8–5).

Calculation of NPSHA involves looking at two different physical processes. The first is the calculation of the friction losses that occurs in the suction pipe. The suction piping has friction losses that increase with the velocity of the liquid. Both the friction losses and the minor losses of the suction pipe should be calculated. Also, the liquid loses pressure as it enters the suction piping and travels upward toward the impeller. The first part of the calculation of NPSHA (fig. 8–71) includes the determination of the friction losses in the suction pipe and the change in elevation of the liquid.

The second consideration in the calculation of NPSHA involves the physical properties of the liquid that is being pumped. The boiling point of a liquid decreases as the pressure decreases. As liquid travels up the suction pipe, its pressure decreases. Water, like any liquid, will boil at some combination of pressure and temperature. Avoiding the boiling point of the liquid in the suction pipe is the reason the NPSHA must exceed the NPSHR.

The fact that water is at room temperature does not mean it can not boil. The normal boiling point of any liquid is the temperature where the vapor pressure equals the ambient atmospheric pressure. For example, water at 212 degrees Fahrenheit boils at sea level (absolute pressure is 33.9 ft), and water at 100 degrees Fahrenheit boils at an absolute pressure of 2.2 feet (table 8–6). Water in the suction pipe will have a pressure that is less than atmospheric pressure. If the pres-

Table 8–5 Standard atmospheric pressure for different altitudes

Altitude (ft)	Atmospheric pressure (ft)
0	33.9
500	33.3
1,000	32.8
1,500	32.1
2,000	31.5
2,500	31.0
3,000	30.4
3,500	29.8
4,000	29.2
4,500	28.8
5,000	28.2
5,500	27.6
6,000	27.2
6,500	26.7
7,000	26.2
7,500	25.7
8,000	25.2

Figure 8–71 NPSH for a suction lift

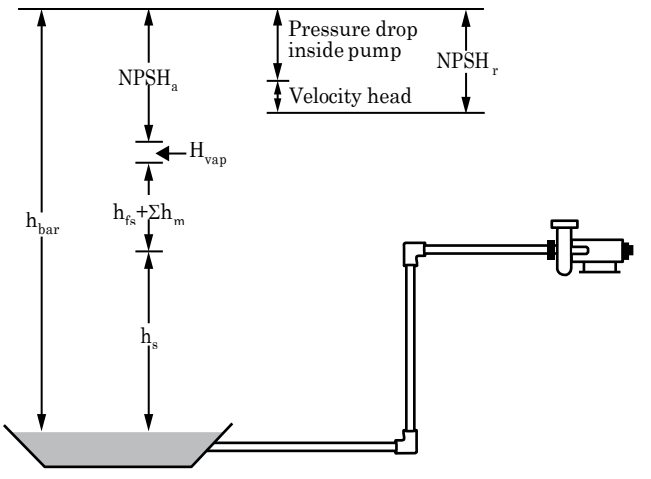

Table 8–6 Vapor pressures of water for various temperatures

Temperature °F	Vapor pressure ft
60	0.59
70	0.84
80	1.2
90	1.6
100	2.2
110	3.0
120	3.9
130	5.0
140	6.8

sure is too low, it will boil, and when the pressure is then increased, as it will be when it passes through the impeller, it will cavitate. Cavitation is the formation of vapor bubbles of a flowing liquid in a region where the pressure of the liquid falls below its vapor pressure.

Equation 8–18 is the equation for calculating NPSHA (table 8–7 for description of factors). Once the NPSHA is calculated, it must be compared against the NPSHR for the pump at the maximum expected flow rate. NPSHR for any given pump increases as the flow rate increase, so the designer should determine the maximum flow rate of the pump and determine the NPSHR at that flow rate. An appropriate safety factor should be included in the calculation of NPSHA to account for changes in the weather and minor suction line screen clogging.

Table 8–7 Description of the components for NPSH

h_{bar}	The absolute (barometric) pressure on the surface of the liquid in the supply tank.	Typically atmospheric pressure (vented supply tank or open water surface), but can be different for closed tanks. If atmospheric pressure is used, be sure to adjust for site elevation. Always positive (may be close to zero, but even vacuum vessels are at a positive absolute pressure).
h_s	Suction lift - head measured from the intake water surface to the eye of the impeller. If the water surface is above the impeller eye, is negative.	Can be negative when liquid level is above the centerline of the pump (called static head). Can be positive when liquid level is below the centerline of the pump (called suction lift). Always be sure to use the lowest liquid level allowed in the tank or the lowest expected water level in a stream or reservoir.
h_{vap}	The absolute vapor pressure of the fluid at the maximum expected temperature.	Must be subtracted in the end to make sure that the inlet pressure stays above the vapor pressure. Determine the h_{cap} of the highest expected temperature of the water. Remember, as temperature goes up, so does the vapor pressure.
h_{fs}	The pipe friction between the suction intake and the pump.	
$\sum h_m$	The sum of the minor pipe friction losses such as entrance, bend, reducer and valve losses. The minor losses are significant!	Piping and fittings act as a restriction, working against liquid as it flows towards the pump inlet.
h_{vol}	The partial pressure of dissolved gases such as air in water (usually ignored) or volatile organic matter in wastewater (customarily estimated at 2 ft).	
FS	A factor of safety used to account for the uncertainty in hydraulic calculations and for the possibility of swirling or uneven velocity distribution in the intake.	A typical safety factor (FS) is 4 feet. This will typically overcome changes in atmospheric pressure due to weather, and minor clogging of any inlet screen.

$$NPSHA = h_{bar} - h_s - h_{fs} - \sum h_m - h_{vap} - h_{vol} - FS \quad \text{(eq. 8–18)}$$

The pumping plant designer has several options if the NPSHA is less than the NPSHR. The suction pipe can be made larger to reduce friction losses, or the pump can be placed closer to the elevation of the water.

One relatively common instance of insufficient NPSH is at the startup of rotodynamic irrigation pumps. The pump is working against low pressure due to the empty irrigation pipeline. The typical pump characteristic curve indicates that when the total dynamic head is low, the flow rate is high. The high flow rate in the suction pipe creates higher friction loss in the suction pipe, and this reduces the NPSHA. If the NPSHA is less than the NPSHR, cavitation will occur. If cavitation occurs, close the discharge valve. If cavitation is allowed to continue, the impeller and pump casing can become pitted and damaged, reducing pump capacity. To eliminate cavitation as well as water hammer, and to prevent high amperage draw on demand meters, open the discharge valve slowly to fill the mainline when starting the pump.

Caution: Do not let the pump run more than two minutes with the discharge valve closed.

(b) Water hammer

Water hammer occurs when fluid flowing full through a closed piping system undergoes a rapid change in velocity, either a retardation or acceleration of the flow, such as sudden starting, stopping or change in speed of a pump; or suddenly opening or closing of a valve. The sudden increase in pressure is the result of the kinetic energy of the moving mass of water being transformed into pressure energy. When a valve is rapidly closed in a pipeline during flow, the flow through the valve is reduced, resulting in an increase in the head on the upstream side of the valve and causing a pulse of high pressure to be propagated upstream. Action of this pressure pulse is to decrease the flow velocity. The pressure on the downstream side of the valve is reduced and a wave of the lowered pressure travels downstream. If the valve closure is rapid enough and the steady pressure is low enough, a vapor pocket may form downstream from the valve and the cavity will eventually collapse and produce a high pressure wave downstream. This is possible where the sump area and adjacent areas have too small a water volume.

The excessive pressure rise in the system can cause damage on either the suction or discharge side of the pump. Water hammer can cause rupture and serious damage to the entire piping system unless essential precautions are taken. Water hammer may be controlled by limiting the design velocity in the pipeline, regulating valve closure time, installing surge tanks and pressure relief valves, or other means.

Water hammer calculations are rather complex; therefore, it is recommended that specialized engineering services be employed in cases where water hammer may be a problem (i.e., surging flows, rapid valve closings, or velocities exceed recommended limits).

(c) Cavitation

Cavitation is a term used to describe a rather complex phenomenon that may exist in a pumping installation. In a centrifugal pump cavitation may be explained as:

- As the liquid flows through the suction line and enters the eye of the pump impeller, an increase in velocity takes place. This increase in velocity is accompanied by a reduction in pressure.
- If the pressure falls below the vapor pressure corresponding to the temperature of the liquid, the liquid will vaporize and the flowing stream will consist of liquid plus pockets of vapor.
- Following further through the impeller, the liquid reaches a region of higher pressure and the cavities of vapor collapse. It is this collapse of vapor pockets that causes the noise incident to cavitation.

Cavitation need not be a problem in a pump installation if the pump is properly designed, installed, and operated in accordance with the designer's recommendations. Cavitation is not necessarily destructive, and a pump may operate rather quietly if cavitation is mild. The only effect may be a slight drop in efficiency. Severe cavitation will be very noisy and will destroy the pump impeller, other parts of the pump, or both.

Any pump can be made to cavitate, so care should be taken in selecting the pump and planning the installa-

tion. For centrifugal pumps, avoid as much as possible these hydraulic and pump conditions:

- heads much lower than the head at peak efficiency of the pump
- capacity much higher than capacity at peak efficiency of the pump
- suction lift higher or positive head lower than that recommended by the manufacturer
- liquid temperatures higher than that for which the system is originally designed
- speeds higher than manufacturer's recommendation

The explanation of cavitation in centrifugal pumps cannot be used when dealing with propeller pumps. The water entering a propeller pump in a large bell-mouth inlet will be guided to the smallest section, called a throat, immediately ahead of the propeller. The velocity there should not be excessive and should provide a sufficiently large capacity to fill properly the ports between the propeller blades. As the propeller blades are widely spaced, not much guidance can be given to the stream of water. When the head is increased beyond a safe limit, the capacity is reduced to a quantity insufficient to fill up the space between the propeller vanes, due to the power limitations of the pump. The stream of water will separate from the propeller vanes, creating a small space where pressure is close to a perfect vacuum. In a fraction of a second, this small vacuum space will be smashed by the liquid hitting the smooth surface of the propeller vane with an enormous force, which starts the process of surface pitting of the vanes. At the same time a sound like rocks thrown around in a barrel or a mountain stream tumbling boulders will be heard.

The five rules applying to centrifugal pumps can be changed to suit propeller pumps. These conditions should be avoided as much as possible:

- heads much higher than the head at peak efficiency of the pump
- capacity much lower than capacity at peak efficiency of the pump
- suction lift higher or positive suction head lower than that recommended by the manufacturer
- liquid temperatures higher than that for which the system is originally designed
- speeds higher than manufacturer's recommendation

The cavitation parameter, σ, is useful in characterizing the susceptibility of the pumping system to cavitate, which is defined by equation 8–19.

$$\sigma = \frac{\frac{p_a}{\gamma} - \frac{p_v}{\gamma} - H_s}{H} \qquad \text{(eq. 8–19)}$$

where:

P_a = absolute pressure at the point of interest
P_v = vapor pressure of water
γ = specific weight of water
H_s = static suction head
H = pumping head

The cavitation parameter actually is a ratio of the total head above the vapor pressure to the total head produced by a pump. When σ is zero, the pressure is reduced to the vapor pressure and boiling (cavitation) will occur. A critical cavitation parameter is determined through cavitation tests by a pump manufacturer. For cavitation-free pump performance, the suction head for an impeller installation must be set in such a manner that the cavitation number exceeds the critical cavitation number. It should be noted that the less the value of H_s and the greater the value of σ, the greater the assurance against cavitation. See example 8–11 acceptable static suction head.

(d) Specific gravity

Specific gravity is the ratio of a substance's density or mass to that of the density of water at 4 degrees Centigrade. The specific gravity of water is generally taken as 1.0 but will vary slightly with temperature. Specific gravity becomes important when sizing a pump because it is representative of the fluids weight, and weight has a direct effect on the amount of work a pump will have to perform. The weight does affect the amount of work performed by the pump and there by the amount of horsepower required as shown in equation 8–3.

$$\text{whp} = \frac{(Q)(H)(SG)}{3{,}960}$$

A relationship between specific gravity and its effects on head and pressure are shown in figure 8–72.

Figure 8–72 Relationship between specific gravity, head, and pressure

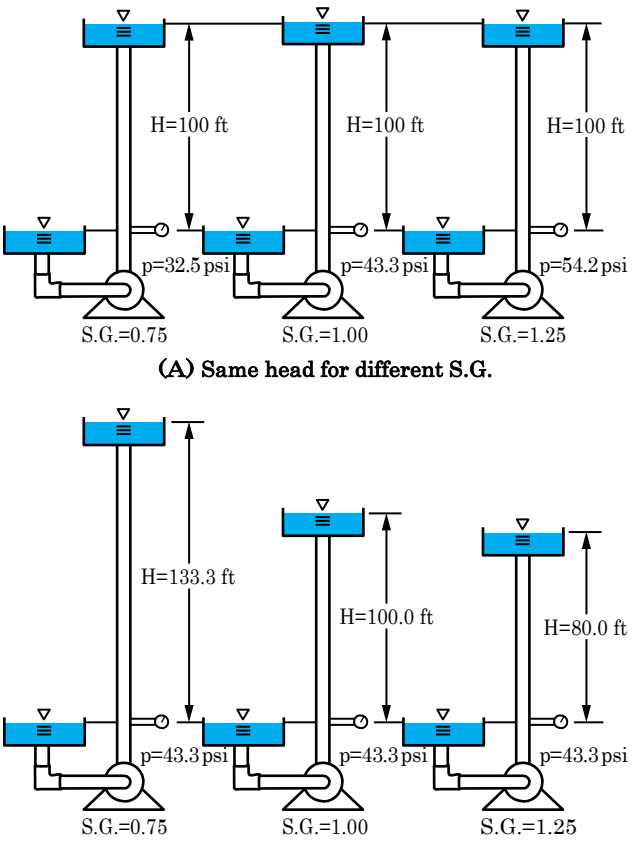

623.0810 Pump Sump Design and Pump Installation

Warning: Hazards associated with working in confined spaces such as vaults and sumps include oxygen deficient atmosphere, toxic gasses, and insufficient workspace around electrical components. All persons who work around sumps and vaults should have appropriate safety training. The operation and maintenance plan should address the need for proper safety training.

(a) Sump design

A pumping station should be located or sited in such a manner as to produce the most direct inflow possible. Any location that produces asymmetrical flow into the pump bays causes problems with circulation, uneven velocity distribution, vortices, and generally poor pump performance. In order to operate at its designed efficiency, to prolong the life of the equipment, and to minimize operation and maintenance costs, these factors should be considered when locating and installing pumps and motors/engines:

- Located to have the most direct inflow possible.
- Foundation material that will support the planned installation.
- Proper alignment.
- Easy access for inspection, operation, and maintenance.
- Protection from the elements, insects, animals and vandalism. In the case of covers or houses, adequate headroom, without stooping, and work area for servicing equipment should be provided. Special provisions for removal and replacement of equipment should also be planned. For electric motor installations, the control panel and other electrical components should be enclosed in a waterproof NEMA box or otherwise protected.
- Protection from flooding.
- Location of the pump as close to the water supply as possible.

Proper pump sump design and pump installation are critical to the long-term operation and maintenance of the pumping plant.

(b) Determination of sump dimensions

The dimensions and general layout of the sump must fulfill a number of requirements.

A properly designed pump sump will minimize turbulence, minimize influences of intake pipes and other obstructions in the pump sump, provide proper intake velocities, and prevent vortices. The selected design must provide adequate horizontal and vertical clearance and adequate approach conditions for the pumps to be used. There are important layout and dimensional requirements for satisfactory pump performance

Limit velocities in the sump to a maximum of 2 feet per second unless higher velocities are required to minimize deposition or to address other special conditions. Grating or screens may be required where trash or debris may enter the pump. Limit velocities through grate or screen opening to 1 foot per second to minimize plugging. Limit intake velocities to 0.5 feet per second where entrapment or injury of fish is primary consideration.

Horizontal clearances for rectangular wet-pit sumps are generally satisfied if the distance between centerlines of adjacent pumps is equal to the sum of the suction bell diameters (plus the thickness of the divider wall), and if the centerline of each pump is at least one suction bell diameter away from the nearest sump side wall and three-fourths of a suction bell diameter from the rear wall (COE).

The principal factors involved in the determination of submergence and vertical clearance requirements are cavitation limits and the means to preclude the formation of sustained vortices. Adequate submergence of the intake suction bell must be maintained and adequate clearances must be maintained between the end of the intake bell and the side walls and bottom of the sump or intake structure. The impeller should always be completely submerged at the start of pumping.

When water must be pumped from a well or a sump of small cross-sectional area, the water will tend to rotate, and this will interfere with the flow into the suction line. This is particularly true in cylindrical sumps or wells. A baffle placed on opposite sides of the suction pipe and at a right angle to the rotation of the water can reduce these effects.

The intake pipe should be level, plumb, or in the case of centrifugal pump intakes installed on a slope, with a uniform slope, upward from the source of water to the pump (fig. 8–25). There should be no high spots where air can collect and cause the centrifugal pump to lose its prime. The inlet end of the intake pipe should be suspended above the earth bottom of a stream, pond, canal or other earthen structure. Construction of an earthen sump in earthen structures can improve the intake characteristics of the pump. On horizontal intake lines where a reducer is used, it should be of the eccentric type with the straight section on the upper side of the line and the tapered section on the bottom side.

When pumping from rivers or streams with moderately sloping banks, the pump may be mounted on pontoon, skids, or on sloping timbers or tracks so that it can be removed quickly in the event of flooding. This method also can be used where the water level fluctuates widely. With steep banks, it may be necessary to build a foundation platform secured to piling or to place the pump unit on a floating barge or boat.

Manufacturer's recommendations for sump design should be followed, if available. Special design considerations are required for more than one pump in a sump or other complicated pump sump designs. One reference for complicated sump design is the Pump Sump Design and Pump Installation ANSI/HI 9.8–1998 standard. Figures 8–73 through 8–76 give general recommendations for sump design.

Figure 8–73 shows typical installation for a circular sump. If water fluctuates and there is a possibility of low head on the intake pipe the intake pipe should be installed with a hood as shown in figure 8–73. Figure 8–74 shows installation requirements specific for propeller pumps. Figures 8–75 and 8–76 shows requirements for single and multiple pump installations in a rectangular sump.

Example 8–11—How to determine the maximum permissible suction head before cavitation is likely to occur.

Given:
A critical cavitation parameter 0.12 was obtained by a series of tests. A pump is to be installed at a location where the absolute pressure is 15 pounds per square inch and the vapor pressure is 0.70 pounds per square inch. The unit is supposed to pump water against a head of 100 feet at a temperature of 90 degrees Fahrenheit.

Find:
Determine the maximum permissible suction head before cavitation is likely to occur.

Solution:
Obtain the specific weight for water at 90 degrees Fahrenheit from a water properties table. From equation 8–15, H_s can be solved as:

$$
\begin{aligned}
H_s &= \frac{P_a - P_v}{\gamma} - \sigma H \\
&= \frac{(15-0.70)\,\mathrm{lb/in^2} \times 144\,\mathrm{in^2/ft^2}}{62.1\,\mathrm{lb/ft^3}} - 0.12 \times 100\,\mathrm{ft} \\
&= 21.2\,\mathrm{ft}
\end{aligned}
$$

Figure 8–73 Typical installation—single pump, circular sump

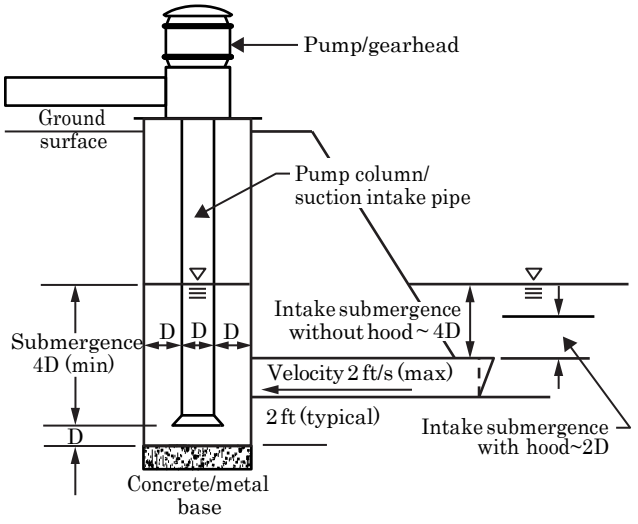

Figure 8–74 Wall and floor clearances required for propeller pumps

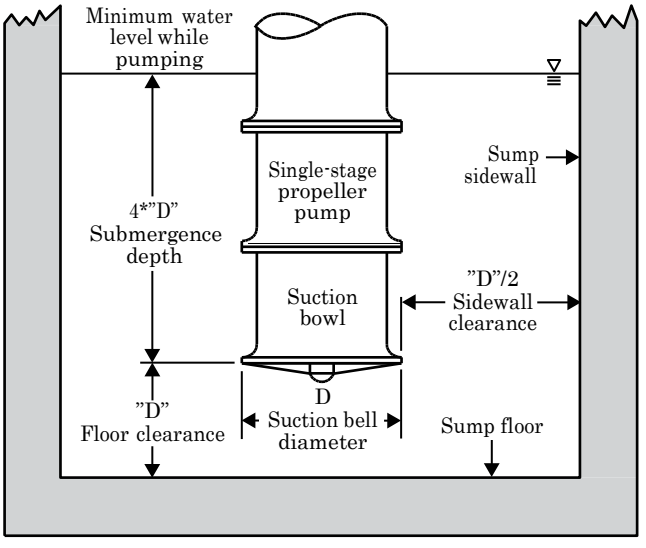

Manufacturer;s recommended clearances for propeller pumps

Pumps size (in)	Submergence depth: A	Sidewall clearance: B	Floor clearance: C
8	2 ft 2 in	12 in	7 in
10	2 ft 6 in	15 in	8 in
12	2 ft 9 in	18 in	8 in
14	3 ft 0 in	21 in	12 in

When two pumps are used, the clearance between pump bells should be 33, 41, 50 and 66 inches for 8, 10, 12, and 14 inch pumps, respectively.

Figure 8–75 Typical installation – single pump, rectangular sump

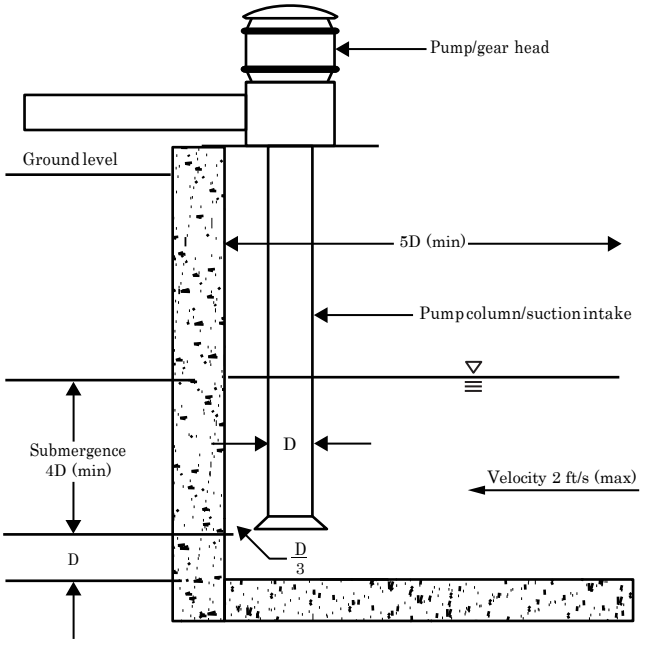

Figure 8–76 Typical installation—multiple pumps, rectangular sump

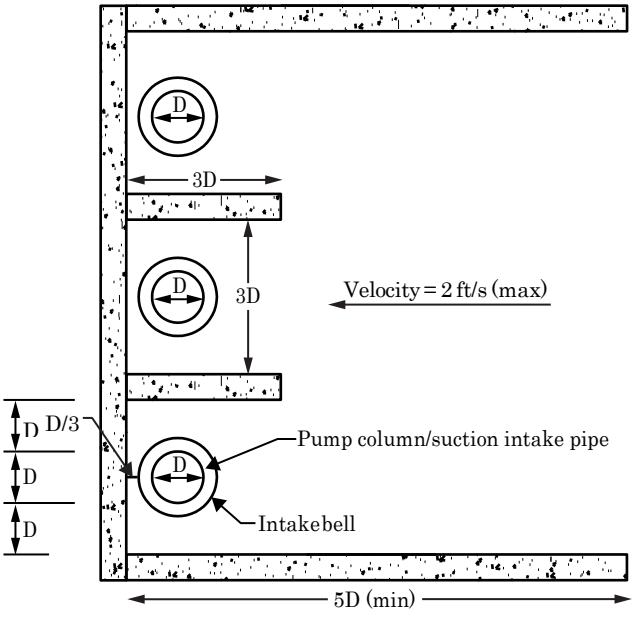

623.0811 Pump controls and appurtenances

This section describes electrical controls and appurtenances for pumps. Parts of this section were furnished by courtesy of the Irrigation Association. This is for general information only and is in no way all inclusive of the different controls and components that can be part of a typical pump station. The intent is not to provide detailed wiring and hook up instructions. All electrical connections should to be done according to local codes and by a licensed electrician. In addition, this material is generally for small pump applications. Large pump stations for agriculture, golf courses, or other sites require special control packages that are not covered here.

(a) Starters, relays and contactors

(1) Starters

Starters are relays, and are typically a combination of several devices: contactors, magnetic starters, and overload relays (fig. 8–77). The magnetic starter is a relay and solid-state starter is a combination switch. The difference between the magnetic and the solid-state starter is that the solid-state starter is designed to slowly ramp up the voltage to the motor so that a voltage spike does not occur and blow fuses. This is used on higher-amperage motors and is also commonly used in a pumping application to control the amount of surge that is placed on a system when pumps are first started in a open unloaded condition.

(2) Relay

The primary role of the relay in regard to pump controls is to start the pump. A relay is basically a switch that allows a lower voltage signal to close a circuit of higher voltage.

Irrigation controllers do not put out enough voltage or amperage to run a pump. Controllers typically run about 24 volts and about 1 to 2 amps, which is enough to activate a relay. The 24 volts from the controller terminal board energize the relay, which in turn closes a switch that allows the higher voltage needed by the pump to flow through the relay to the pump motor. Pumps that have a high current and voltage requirement need heavier duty relays called magnetic starters.

Relays are rated by the volts and amps they need to activate, and the volts and amps needed by the pump.

The relay in figure 8–78 has a single pole and a double throw meaning it can throw to one of two positions. The most common relay used in irrigation is a double pole—double throw. The number of throws is the number of separate positions that the switch can adopt. A single-throw switch has one pair of contacts that

Figure 8–77 Pump starter and overloads (*courtesy of the Irrigation Association*)

Figure 8–78 Typical relay control circuit.

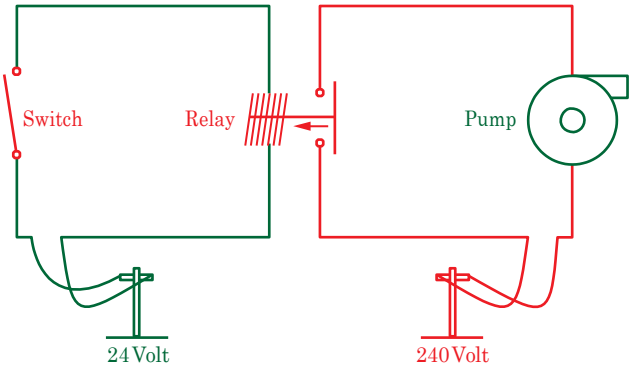

can either be closed or open. A double-throw switch has a contact that can be connected to either of two other circuits. The number of poles is the number of separate circuits which are controlled by a switch. For example, a two pole switch has two separate identical sets of circuits controlled by the same switch.

Sometimes we refer to these as contacts instead of poles. They are also listed by the terms normally open or normally closed. This defines what position the switch is in when it is not activated. A schematic will always show the relay in a de-energized state. Relays come in many different pole and throw (or contact) configurations to meet many different pumping and control needs.

(3) Contactors

Contactors (fig. 8–79) serve the same role as relays but for higher voltages. The typical relay used in residential and small commercial applications is not rated for the voltage and amperage of larger pump motors.

In some cases, both relays and contactors are used. First the relay is activated, which in turn activates the contactor. The contactor then activates the pump.

Figure 8–79 Typical contactors

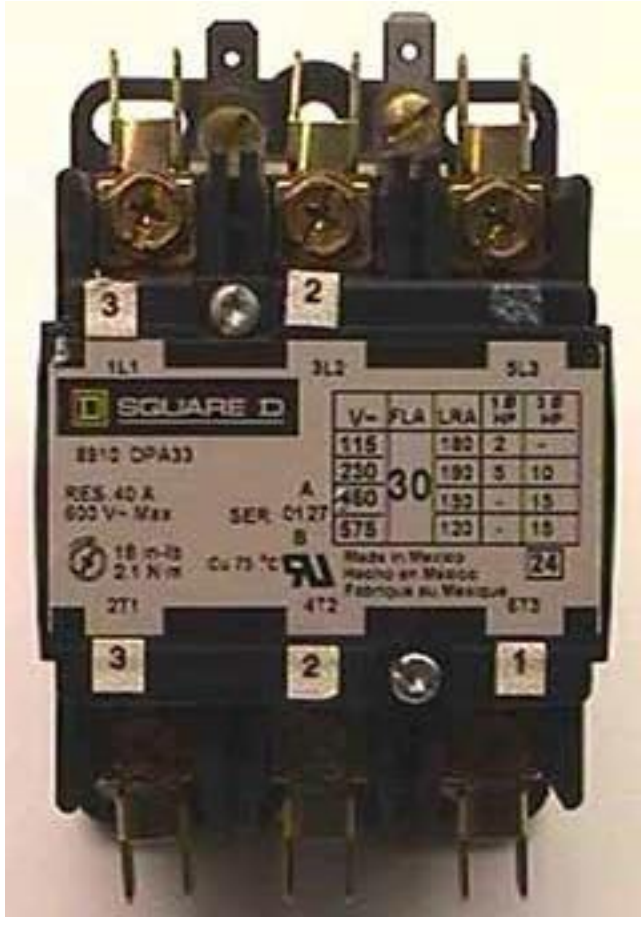

(b) Safety features

(1) Thermal auto reset relay

The thermal auto reset relay serves as a safety cutoff. It heats up when high voltage/amperage conditions are met and breaks the circuit then it cools down and resets itself. Figure 8–80 shows an electromechanical overload relay.

(2) Limit switches

Limit switches are used most often to shut the pump down in case conditions that are hazardous to the pump or pump motor exist.

A low water level switch is commonly used where a pump is drawing out of a pond or tank and the water level may drop too low. This switch will cut the power to the pump in case of low water.

A flow switch (fig. 8–81) can be used to activate or deactivate a pump based on sensed flow conditions in the system. In a booster pump situation, once flow is detected in the system, the flow switch turns the

Figure 8–80 Typical thermal auto reset relay *(courtesy of Irrigation Association)*

booster pump on. Another application is to cut power to the pump if the flow is too high or too low in the system.

A pressure switch is used to cut off power to the pump if the system pressure is too high or too low (fig. 8–82). It is installed at the discharge of the pump. One way to wire this is to hook it up to the same double pole-double throw relay that is used to activate the pump. The difference is that it is hooked to the normally closed position as compared to the normally open position.

An oil pressure switch is used to turn the pump off in case an engine-driven motor has an engine oil pressure drop. This is done with a kill switch on the engine. These switches are often latching, which means the switches need to be manually reset after they trip.

Figure 8–81 Flow limit switch *(courtesy of Irrigation Association)*

Figure 8–82 Pressure switch

A time delay switch allows a time limit to be set before a switch activates. This is so that a temporary reading from one of the installed safety devices does not cause the pump to shut down unnecessarily.

Alarms are added to limit switches and or relays to provide the end user with a visual or audible alert that something is wrong with the system. Some more-sophisticated alarms actually take action based on preset instructions. A list of some of the more common alarms are:

- high pressure
- low pressure
- no flow
- high flow
- low oil
- low fuel

Figure 8–83 Fuses installed in a control panel

(3) Fuses

Fuses are used on every system. There are several types and combinations. In addition, fuses may be used together with circuit breakers. The purpose is to protect the electrical components and to protect the user from being electrocuted (fig. 8–83). The most common fuses used with pumps are:

- The standard fuse is the most basic. It simply breaks the circuit if a high flow of voltage and amperage occurs, and it is installed at the power source for the pump motor. It has to be replaced after it blows.
- The fast-acting fuse is designed to blow immediately, to protect sensitive equipment.
- The slow-blow fuse is set to blow after heating up. The larger the motor, the longer the slow-blow fuse will take to blow. Essentially, a slow-blow fuse requires a sustained high amperage condition to blow.
- The circuit breaker is part of the control panel and is typically required by code.

(c) Other controls and appurtenances

(1) Timers

Timers do just like their name suggests. They simply allow the user to dictate when power will or will not be allowed to the motor. Timers are useful for operating an irrigation system according to the schedule in the irrigation water management plan.

(2) Pump motor ground

Pump motors need to be grounded to earth in two places. First, there is a third wire in the power wire going to the pump that hooks up to the pump motor. Second, there is a ground post on the motor casing that should be connected to an earth ground.

(3) Phase monitors

Phase monitors are relays that monitor the incoming power wires, typically on 240 or 480 volt systems (fig. 8–84). If the phase monitor senses a voltage loss or a voltage reversal condition in any of the three phase wires or voltage legs, it breaks the control cable to the relay.

(4) Safety disconnect awitch

The safety disconnect switch is typically part of the electrical control panel. It automatically cuts the power if the door is opened to protect people from shock.

(5) Foot valve

A foot valve is typically located at the end of the suction intake on a centrifugal pump. The function of the foot valve is to keep the intake line full once it is filled or primed (fig. 8–85).

(d) Variable-frequency drives for electric motors

When a single pump is required to operate over a range of flow rates and pressures, standard procedure is to design the pump to meet the greatest output demand of both flow and pressure. For this reason, pumps are often oversized and will be inefficient when operating at conditions other than the design point. This common situation presents an opportunity to reduce energy requirements by using control methods,

Figure 8–84 Phase monitor *(courtesy of Irrigation Association)*

Figure 8–85 Typical foot valves

such as a variable-speed drive (VSD). Since modulating the frequency of the power supply is one way of controlling the pump speed, the variable-frequency drive (VFD) is type of VSD.

A VFD is an electronic system that converts AC to DC power and then simulates AC by modulating the frequency of the pulses of power supplied to the motor, thereby changing its speed. The primary reason VFDs are installed is for energy savings. Applications where energy savings might result using a VFD can generally be divided into three basic categories:

- constant pressure/head-variable flow
- constant flow—variable pressure/head
- variable flow—variable pressure/head

Constant pressure/head applications include those where pressure is maintained at some desired point regardless of flow rate. An example would be where several center-pivot sprinklers are supplied by a pump from a single well. One or more pivots would operate at a time, thereby varying the flow rate. As the flow rate changes, the head will move up or down the pump curve. The same pressure would be required regardless of how many pivots were operating (fig. 8–86). Savings would be realized by operating at the design pressure and not wasting or burning off excess head through pressure regulators or some other pressure controls. With a VFD, there is also the possibility of operating in a more efficient are of the pump curve.

Constant flow applications require flow to remain constant regardless of changes in pumping head and pressure. A flow meter is usually employed as a means of sensing the flow rate and sending a feedback signal to the VFD to control motor speed, accordingly. One example would be where a well experiences drawdown over the irrigation season. At the beginning of the season, the water level in the well is near the surface, and as the season progresses, the water level drops. The pump is sized for the maximum drawdown and thus is oversized for much of the season. By adding a VFD, the total head developed by the pump can be adjusted as the drawdown changes (fig. 8–87).

Variable flow—variable pressure applications occur where both the flow and pressure change in the system. An example might be a farm with multiple systems of wheel lines and pivots operating off of one or multiple pumps. There could be any combination of systems operating at a time with varying elevation requirements for the different systems. Figure 8–88 displays pump and operation curves representing this condition.

Figure 8–86 Constant pressure—variable flow application

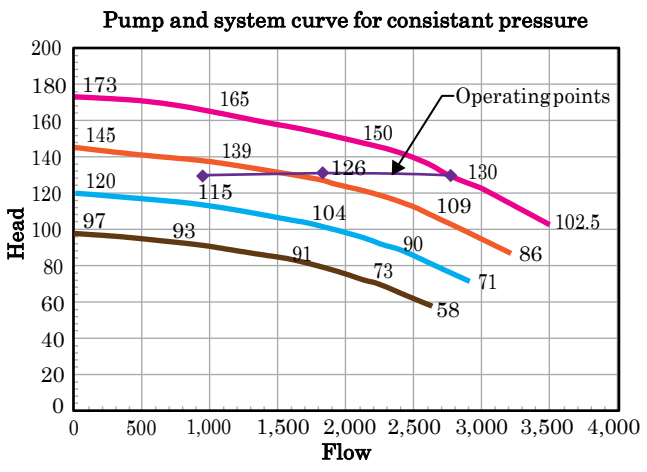

Figure 8–87 Constant flows – variable pressure application

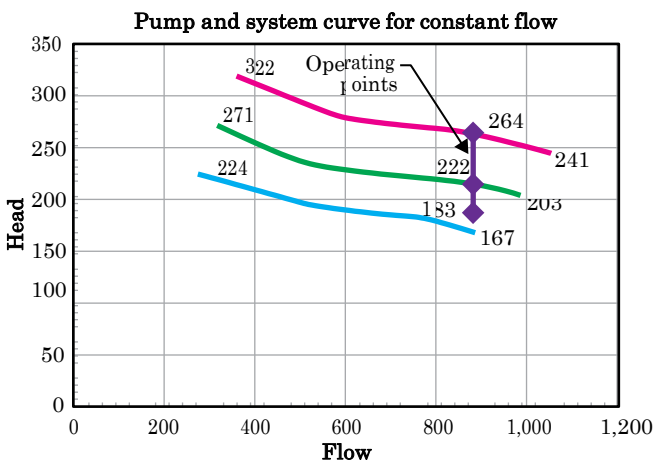

If the purpose of installing a VFD is power savings, several factors need to be considered, including motor efficiency and motor loading. As long as the motor operates in the range of 60 to 100 percent load factor, the efficiency curve is relatively flat. When loading drops below 60 percent, motor efficiency begins to drop and will drop rapidly at around 40 percent load. With variable-speed drives, the motor may operate in an inefficient range because of the changes in the motor load. In this case, use of a VFD may not actually result in an energy savings. A case study showing how to calculate the power savings from installing a VFD is shown in example 8–12.

The process of converting AC to DC then back to an AC wave form is not 100 percent efficient. Heat is generated, which is an energy loss. A suggested efficiency range for VFDs is 95 to 98 percent. The pulsed nature of the current may also cause harmonic losses in the motor for another drop of about 1 percent efficiency. For design purposes, an appropriate estimate of efficiency for VFDs is 97 percent.

(1) Other purposes

Other reasons VFDs are installed besides for power savings include:

- soft start/stop option
- single to three phase conversion
- balancing an open delta three phase supply to prevent overheating the motor
- improved process control

Figure 8–89 shows a typical pump panel containing a VFD.

(2) Disadvantages and potential problems

Potential problems encountered when installing a VFD on an existing system can include damage to the motor bearings or insulation due to excessive induced electrical current in the motor shaft, as well as system instability dues to harmonics and resonant frequencies with the designed configuration.

VFD electronics are subject to environmental factors that may not be a concern for constant-speed units, but that can contribute toward equipment malfunction. Some of the environmental factors that must be considered are temperature, humidity, and elevation.

Consideration must also be given to VFD reliability, maintenance costs, and skills of available maintenance personnel. Additionally, the completed package must

Figure 8–88 Variable pressure—variable flow application

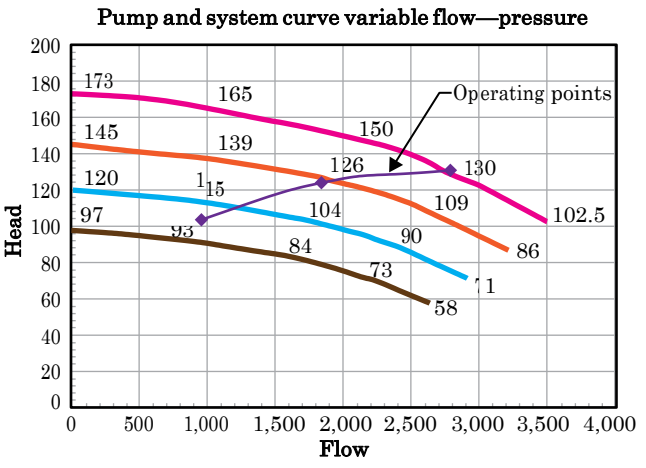

Figure 8–89 Variable-frequency drive and pump panel near Nampa, ID

be considered as a unit. A variable-speed drive unit can consist of a motor by manufacturer A, an inverter by manufacturer B, and system control hardware and interface to inverter by manufacturer C. The VFD supplier needs to assume responsibility for the total package. The best interests of the customer are served if they only have one entity to approach when problems with one of the components interrupts pump operation and water supply.

Cavitation can significantly decrease pump performance and may even damage a pump. Reducing the pump speed with a VFD can have a positive effect on reducing cavitation, but increasing pump speed will negatively affect pump suction performance and increase the risk of cavitation damage. A thorough investigation should be conducted on the effects of an increase in pump speed beyond normal operating speed.

(3) VFD design considerations

In the design process, it is not unusual for a VFD to be rated for more horsepower than the nameplate horsepower of motor being driven. This is done to compensate for the service factor of the motor and the efficiency of the VFD, and, if drives are oversized, it tends to minimize voltage distortion and interference with other electrical equipment.

Care should also be taken to not select a VFD too large, as the VFD output might exceed motor specifications and cause motor failure. Consult the motor and VFD manufacturers to prevent oversizing of the VFD. When using the VFD for single-phase to three-phase conversions, the typical procedure is to use a VFD rated at twice the size of the motor.

Because incoming power may have irregularities, line filters may be required for VFDs both for the incoming and outgoing lines (fig. 8–90).

Most agricultural applications can be considered outdoor installations. Dust, dampness, rodent damage, and heat are the leading causes of VFD failure. VFDs also generate significant heat that must be dissipated. Cool, clean electrical components last longer and perform better. VFDs are rated for a specific amperage and voltage at a specified temperature. An increase in temperature will see a dramatic drop in VFD efficiency and may require installation of a cooling mechanism. Ambient air temperature must be typically between 32 and 104 degrees Fahrenheit. Adequate sunshades or pump houses may help with the cooling requirement.

Other factors that may affect VFD efficiency include radio frequency or stray high-frequency signals, line voltage variation greater than ±10 percent, line frequency variation greater than ±2 hertz, and altitude greater than 3,300 feet (1,000 meters). Consult the VFD manufacturer to determine the impacts of site-specific conditions.

Figure 8–90 Variable frequency drive with input line filter near Kimberly, ID

Example 8–12—Center-pivot sprinkler with a declining water table, VFD case study

Given:
Water is supplied to the pivot from a single well. The pumping lift from the well ranges from 50 feet at the beginning of the irrigation season to 185 feet at the end of the season. The pumping plant is a vertical turbine pump with an electric motor and runs at 1,770 revolutions per minute. The sprinkler irrigation system is a low-elevation spray application (LESA) pivot system on relatively level ground with the pivot point located 5 feet higher than the well. It is nozzled for 750 gallons per minute at 36 pounds per square inch (ground level at pivot). Pressure Regulators set at 15 pounds per square inch are used on the system to control flow rate during the season. Sprinkler height is 4 ft above ground. The sprinkler irrigates 122 acres of corn with a net irrigation requirement of 24 inches annually, and the power costs are $0.07 per killowatt hour. The sprinkler operates close to its design point at the end of the season.

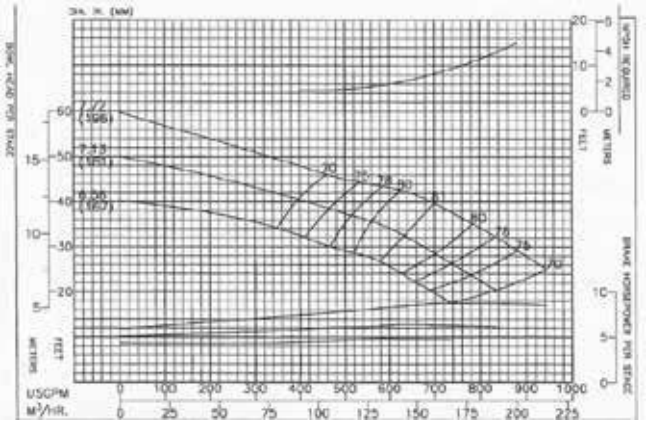

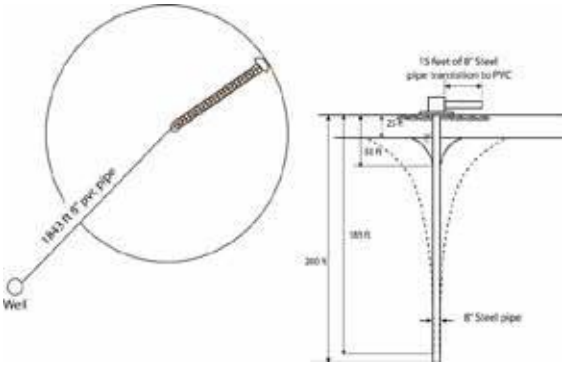

Find:
Input horsepower for end-of-season drawdown. Then determine an alternate VFD pump curve for the beginning of the season and resulting input horsepower. Compare difference in the yearly operating costs without a VFD and with a VFD. The VFD would be operating 50 percent of the time at the starting TDH and 50 percent at the ending TDH.

Solution:
Calculate TDH at the beginning and end of the season.

TDH results:		
	Season start (ft)	End of season (ft)
Static lift	25	25
Drawdown	25	160
Pivot pressure	83.2	83.2
Column and discharge friction loss	4.8	4.8
Elevation from sell to pivot	5.0	5.0
Mainline friction losses	17.7	17.7
Total	160.7 use 161	295.7 use 296

Example 8–12—Center-pivot sprinkler with a declining water table, VFD case study—continued

The pivot applies 1.66 acre-inch per hour (750 gal/min × 60 min/h / 7.481 gal/ft^3/ 43,560 ft^2/ac × 12 in/ft = 1.66 ac-in/h) This is a gross amount. A reasonable efficiency for a LESA system is 92 percent. The net application is 1.52 acre-inch per hour.

The estimated seasonal hours of operation are 1,926 hours (24 in. with sprinkler on 122 ac: 122 ac × 24 in = 2,928 ac-in/1.52 ac-in/h = 1,926 h)

Without VFD

The maximum required TDH is 296 feet and the system would operate at this point year round. Early in season, the excess pressure would be dissipated by the pressure regulators. The required water horse power is (eq. 8–3)

$$\text{whp} = \frac{750\ \text{gpm} \times 296\ \text{ft (TDH)}}{3{,}960} = 56.06\ \text{hp}$$

Select a deep well turbine pump with 8–inch column pipe. Operating point 750 gallons per minute at 37 feet head per stage, and 1,770 r/min. Number of stages needed –296 feet divided by 37 foot head stage is 8 stages.

Impeller efficiency from pump curve equals 80.5 percent. Use equation 8–11 to figure bhp

$$\begin{aligned}\text{bhp} &= \frac{\text{whp}}{\text{Eff}_p} \\ &= \frac{56.06}{.805} \\ &= 69.64\ \text{bhp}\end{aligned}$$

Select from table 8–12 efficiency, for a standard efficiency motor, of 91.7 percent. Use equation 8–13 to determine the power input for the motor.

$$\text{power input}\ \frac{69.64\ \text{hp}}{.917\,\text{eff}_m} \times \frac{.746\ \text{kw}}{\text{hp}} = 56.65\ \text{kW}$$

Estimated annual operating cost is:

$$\begin{aligned}\text{Cost} &= 56.65\text{kW} \times 1{,}926\ \text{h} \times \frac{\$0.07}{\text{kW}-\text{h}} \\ &= \$7{,}638\ /\text{season}\end{aligned}$$

Without a VFD or some other type of variable speed control, excess pressure is burned up through the valve and pressure regulators to maintain proper pressure and flow rate.

Example 8–12—Center-pivot sprinkler with a declining water table, VFD case study—continued

With VFD

Use the affinity laws (eq. 8–4) to plot new pump curves using the pump curve provided by the manufacturer.

$$\begin{aligned} rpm_2 &= \sqrt{\frac{H_2}{H_1}} \times rpm_1 \\ &= \sqrt{\frac{161}{296}} \times 1{,}770 \\ &= 1{,}305 \end{aligned}$$

Merely plugging a new value for r/min into the affinity law formula will not work because the new pump curve must pass through the two points, the new head and new Q; the affinity law will give you a curve that passes through one point. The 1,305 r/min would be the lower bound and the real curve is somewhere in between. The solution is iterative, and it can take a little bit of time to find the right combination. A spreadsheet can help streamline the process. By plotting a series of pump curves the solution is estimated at 1,490 r/min.

Alternate pump curve			
R/min			
1,770 (end of season)		1,490 (start of season)	
Q	H	Q	H
460	368	387	261
582	350	490	248
621	340	523	241
700	320	589	227
781	280	657	198
830	256	699	181
880	232	741	164
945	200	795	142

Then plot the estimated operating or system curve and estimate the pump efficiency. The original efficiencies are obtained from the manufacture's pump curve. The new efficiencies are estimated from the original curve and move downward and to the left similar to the pump curves. The resultant graph will look similar to the following graph.

Example 8–12—Center-pivot sprinkler with a declining water table, VFD case study—continued

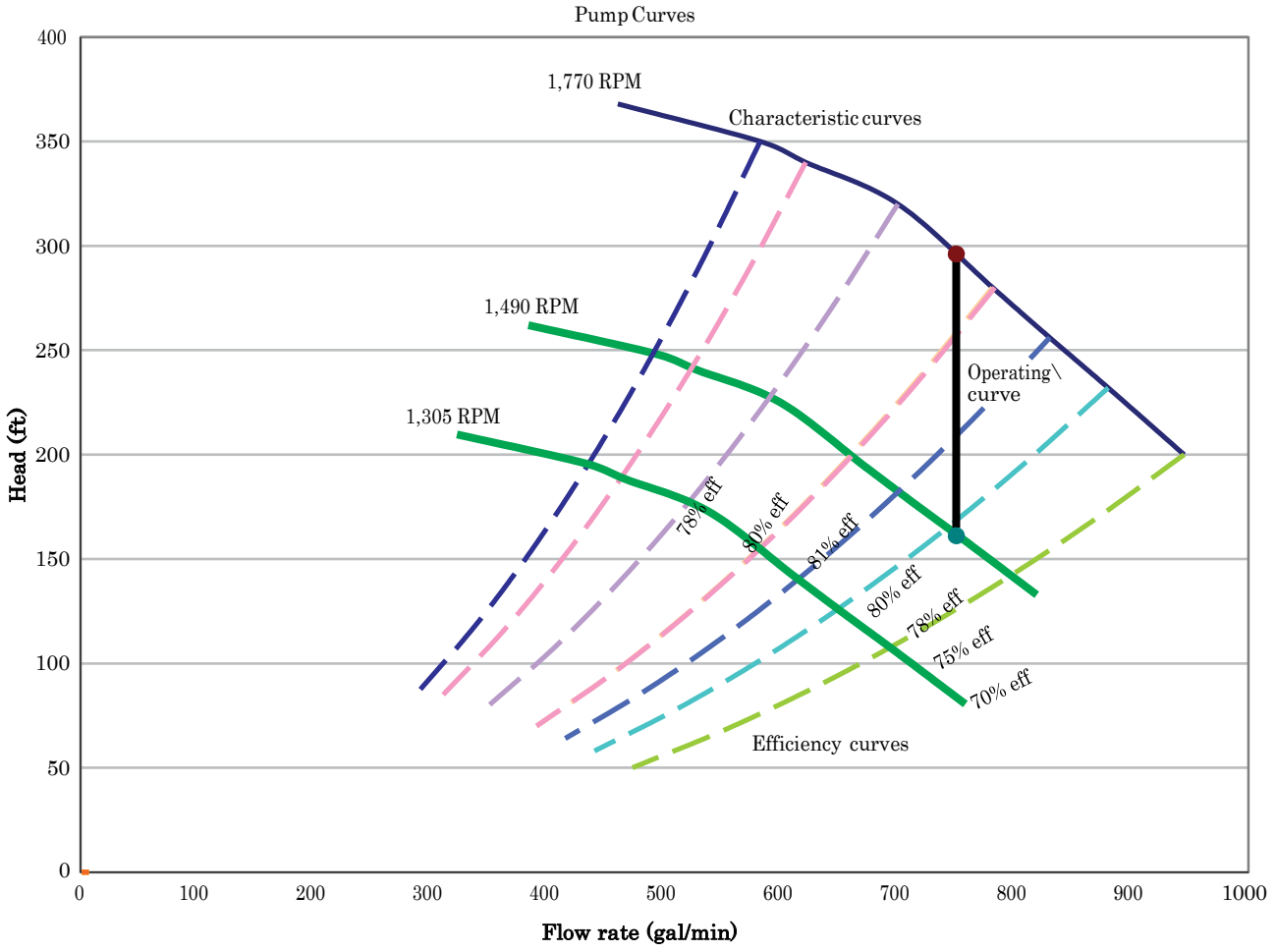

The efficiencies at the various TDHs are:

$$\text{TDH} = 296\ \text{ft} - \text{efficiency}$$
$$= 80.5\%$$

$$\text{TDH} = 161\ \text{ft} - \text{efficiency} \quad \text{(from graph)}$$
$$= 74\%$$

Example 8–12—Center-pivot sprinkler with a declining water table, VFD case study—continued

The VFD adds another efficiency loss. The default efficiency value for a VFD is approximately 97 percent. Horsepower and energy input for the two conditions are calculated using equations 8–3, 8–11, 8–12, and 8–13:

End of season:

Bhp $= Q \times H / 3{,}960 / eff_p / effv_{fd}$
$= 750 \times 296 / 3{,}960 / .805 / .97$
$= 71.8$ hp

Power input $= .746 \times bhp / eff_m$
$= 71.8 / .917 \times .746$
$= 58.41$ kW

Season start:

Bhp $= Q \times H/3{,}960/eff_p/effv_{fd}$
$= 750 \times 161/3{,}960/.74/.97$
$= 42.48$ bhp

Power input $= .746 \times bhp / eff_m$
$= 42.84/91.7 \times .746$
$= 34.56$ kW

The actual energy cost is based upon the percent of the total hours that the system is operated at each condition, in this case take an average of the two. The seasonal cost would be:

Adding a VFD results in a savings of ($7,638–$6,267) = $1,371 per season

The annual or seasonal savings is compared to the cost of the VFD to calculate the payback period. With this example, it is difficult to determine whether installing a VFD is justified on power savings alone.

623.0812 Cost of irrigation pumping

(a) Introduction

The engineer may be called upon to compare costs of different types of pumping installations, particularly the use of different kinds of power units. The irrigation pumping costs include not only the power cost, but also the capital costs for pumps, motors, engines, wells, gear drives, and necessary structures, plus the costs for operation and maintenance. For planning irrigation systems and estimating production costs, planners often look at average annual pumping costs, but the hourly cost of operation or the cost per unit water application depth may be more useful in making economic decisions within the irrigation season. This section addresses only the costs of pumping. Water, delivery, and field application costs should be addressed in a broader economic analysis of the irrigation system.

Through consultation with manufacturers and review of past installations, close estimates of equipment and construction costs can be prepared so that actual pumping costs will be within limits acceptable to the producer. Fuel, maintenance, and labor costs associated with a pumping system are readily calculated using engineering and economic references and information from cost databases.

Pumping costs can be grouped into three groups: variable costs, fixed costs, and taxes and insurance. Taxes and insurance (even though they are fixed costs) usually have minimal effect on overall pumping costs and are not addressed in this section.

Variable costs change from season to season. These costs vary with the amount of water pumped and include costs for energy, operation, and maintenance. Typically, the most significant variable cost is for power to drive the pump. Seasonal crop water use and hours of pumping are the basis for estimating annual operating costs for pumping plants. Local irrigation guides and the National Irrigation Guide provide information necessary for estimating crop water requirements and efficiencies for water conveyance and irrigation applications. Inefficiencies of the water conveyance and irrigation application systems can significantly affect total variable pumping cost.

Fixed costs are incurred even if the pump is not in operation and consist of the capital investment in the physical components of the pumping plant and recurring service costs, plus taxes, interest charges, and depreciation. Physical components of the pumping plant include motor and engine, structures necessary to the pumping plant (housing, foundations, sumps, vaults, etc.), wells and well casings, plumbing, electrical components, and provisions for fuel availability (fuel storage facilities). Recurring service costs can include electrical demand charges, for example.

(b) Electric motors and energy costs

Power consumption for electric-motor-powered pumps was described in NEH623.0808(h). To calculate the cost of pumping use the following equations and procedures.

(1) Power costs based on duration of pumping

The hourly and annual calculation of pumping power costs can be determined using the equations 8–20 and 8–21. An example of the calculations is shown in example 8–13.

$$\text{Hourly power cost} = (\text{iph})\left(0.746\ \frac{\text{kW}}{\text{hp}}\right)\left(\frac{\text{cost}}{\text{kWh}}\right) \qquad \text{(eq. 8–20)}$$

where:

iph = input horsepower to the motor

Cost/kWh = charge for electric power

$$\text{Annual power cost} = (\text{ihp})(0.746\ \text{kW/hp})(\text{cost/kWh})(\text{hours of operation}) \qquad \text{(eq. 8–21)}$$

Example 8–13—Determining annual pumping cost for electric-motor-powered pump

Given:

Bhp = 40

Electrical power cost = \$0.08 per kwh

Decimal motor efficiency = 0.94 decimal efficiency = 94%

Annual hours of operation = 2,350

Find:

The hourly power cost of pumping

The annual power cost of pumping

Solution:

Use equation 8–13 to determine ihp, then use equation 8–20 to determine hourly pumping costs.

$$\text{ihp} = \left(\frac{(\text{whp})}{\text{Pump efficiency} \times \text{motor efficiency}}\right)$$

$$= \frac{40}{0.94}$$

$$= 42.56\,\text{hp}$$

$$\text{Hourly power cost of pumping} = (\text{ihp})\left(0.746\,\frac{\text{kW}}{\text{hp}}\right)\left(\frac{\text{Cost}}{\text{kWh}}\right)$$

$$= (42.56\,\text{hp})\left(0.746\,\frac{\text{kW}}{\text{hp}}\right)\left(\frac{\$0.08}{\text{kWh}}\right)$$

$$= \$2.54$$

Using equation 8–21:

$$\text{Annual power cost} = (\text{ihp})\left(0.746\,\frac{\text{kW}}{\text{hp}}\right)\left(\frac{\text{cost}}{\text{kWh}}\right)(\text{annual operating hours})$$

$$= (\$2.54)(2{,}350\,\text{h})$$

$$= \$5{,}969$$

Note: The costs do not include standby power (the charge for the availability of electricity), nor the investment and depreciation costs of the pumping facility.

Example 8–14—Determining energy costs per acre-foot pumped

Given:

Gross water application = 32.5 inches per acre

Cropped acreage = 40 acres

TDH = 115 feet

V-belt drive, efficiency = 93%

Motor efficiency = 90.1%

Pump efficiency = 71%

Energy cost = $0.075 per KWH

Find:

Kilowatt-hours per ac-ft pumped

Energy cost per acre-foot

Annual energy cost

Solution:

Calculate kilowatt-hours per ac-ft pumped using equation 8–16:

$$\frac{\text{kWh}}{\text{ac-ft pumped}} = \left(\frac{(\text{TDH})(1.023)}{(\text{P Eff.})(\text{M Eff})(\text{D Eff})}\right)$$

$$= \frac{(115)(1.023)}{(.71)(.901)(.93)}$$

$$= 197.75\ \frac{\text{kWh}}{\text{ac-ft}}$$

Energy cost per acre-foot using equation 8–22:

$$\frac{\text{Energy cost}}{\text{ac-ft}} = \left(\frac{197.8\,\text{kWh}}{\text{ac-ft}}\right)\left(\frac{\$0.075}{\text{kWh}}\right)$$

$$= \frac{\$14.83}{\text{ac-ft}}$$

Annual energy cost using equation 8–23:

$$\text{Annual energy cost} = \left(\frac{\$14.83}{\text{acre-foot}}\right)\left(\frac{32.5\text{ inches}}{\text{year}}\right)\left(\frac{40\text{ acres}}{}\right)\left(\frac{1\text{ acre-foot}}{12\text{ acre-inches}}\right)$$

$$= \$1{,}606 \text{ per year}$$

The cost of energy per acre-foot is then calculated using kWh per acre-foot as defined equations 8–22 and 8–23. An example of the calculations is shown in example 8–14.

Energy cost per ac-ft= (kWh per ac-ft)(cost per kWh)

(eq. 8–22)

Annual energy cost =
(total ac-ft for year) (kwh/ac-ft) (cost per kwh)

(eq. 8–23)

Note: The accuracy of cost estimates are limited by the accuracy of estimates or measurements of pumping rates, pumping volumes, total dynamic head, and efficiencies for motor, pump, and drive.

(2) High efficient motors

Since a higher capital investment is required for increased motor efficiency, the annual energy savings with a high efficient motor should be evaluated. The power savings offered by replacing a lower efficiency motor with a higher efficiency motor can be calculated with equation 8–24:

$$\text{Annual cost savings} = (0.746)(\text{bhp})(\text{cost/kWh})(\text{annual operating h})\left(\frac{1}{\text{Eff}_{M1}} - \frac{1}{\text{Eff}_{M2}}\right)$$

(eq, 8–24)

where:
Eff_{M1} = decimal efficiency of the motor with the lower efficiency.
Eff_{M2} = decimal efficiency of the motor with the higher efficiency.

Example 8–15 shows how to use equation 8–24 to calculate savings from higher efficiency motors.

(3) Economic evaluations

The choice of a lower cost standard efficiency motor, an intermediate cost energy efficient motor, or higher cost premium efficiency motor warrants an economical evaluation that addresses system component life,

Example 8–15—Determining annual energy savings from using the higher-efficiency motor

Given:

Motor Eff_1 = 92.4 percent

Motor Eff_2 = 94.4 percent

Annual operating hours = 2,350

Brake horsepower (bhp) = 50

Electricity cost = $0.09 per kwh

Find:

Annual energy savings from using the higher efficiency motor

Solution:

Using equation 8–24:

$$\text{Annual cost savings} = (0.746)(\text{bhp})\left(\frac{\text{cost}}{\text{kWh}}\right)(\text{annual operating h})\left(\frac{1}{\text{Eff}_{M1}} - \frac{1}{\text{Eff}_{M2}}\right)$$

$$= (0.746)(50\,\text{bhp})(\$0.09/\text{kwh})(2{,}350\,\text{h})\left(\frac{1}{0.924} - \frac{1}{0.944}\right)$$

$$= 180.89$$

Note: The savings of $180.89 is an annual savings. The process to evaluate this savings over the life of the motor will be covered in subsequent examples.

interest rates, energy program rebates, annual hours of operation, motor efficiency, and energy rate escalation. Several economic approaches to selection of pump motors and engines are provided below. Similar processes can be used in selection of other system components.

Payback period—A simple approach at evaluating cost effectiveness is to determine the payback period, or the time period required for recovery of the additional capital investment. Payback period (years) is the cost difference of the two motor options divided by the annual power savings. For producers, acceptable payback periods may vary based on the amount of risk they are willing to assume, but a maximum payback period of 3 to 5 years is commonly used. Payback period is applied when making a choice between two options with differing initial investments and different annual return rates. Disadvantages are that actual application of payback period is somewhat intuitive, it ignores the time value of money, and it does not consider benefits that occur beyond the payback period. Payback period is best used to complement more advanced methods of economic analysis.

To compare an energy-efficient motor to a lower-cost standard-efficiency motor having higher energy inputs (assuming all other factors are equal), the payback period is calculated using equation 8–25:

$$\text{Payback period, years} = \frac{\left(\text{cost of motor}_{EE} - \text{cost of motor}_{SE}\right)}{\left(\text{annual energy cost}_{SE} - \text{annual energy cost}_{EE}\right)} \quad \text{(eq. 8–25)}$$

where:

Cost of motor_{EE} = motor cost for energy-efficient motor

Cost of motor_{SE} = motor cost for standard-efficiency motor

Annual energy cost_{SE} = annual energy cost using the standard-efficiency motor

Annual energy cost_{EE} = annual energy cost using the energy efficient motor

Present value and future value methods—Present and future value functions provide a meaningful comparison of cash flows occurring at different points in time. Present value functions equate future cash flows to a present sum, while future value functions equate cash flows to a value at a future point in time. The equations for present and future value calculations are usually presented in a simplified notation using the following variables:

P = present value, dollars
F = future value, dollars
A = uniform periodic payment, dollars
n = number of compounding periods (number of days, months, or years)

The units for the time periods for A and n must be identical (if A is in dollars per month, then n must be the number of months that the payment period covers)

Present value uses the discount rate (interest rate for an alternative investment) to determine the amount of money required today to cover the costs of hardware, operation, and maintenance of an investment over its expected life. The discounting of future annual costs for electricity and maintenance provides the investment required today to cover those future costs. In cost comparisons, the most cost-effective option is the one with the lowest present value. The discount rate used in economic analysis should either be the higher of either the lowest rate at which money can be borrowed or the highest rate of return available for which the risk is acceptable.

In present value equations, the unit of time for interest must be the same unit for the total time period. For example, if the interest rate, i, is expressed as a monthly rate, the life of the investment, n, must be expressed in months. If the interest rate, i, is expressed as an annual rate, the life of the investment, n, must be expressed in years.

The present value factor is a per-dollar factor that can be multiplied by the annual recurring cost to determine the total dollars required today, necessary to cover recurring payments for period of time n, if invested at the specified annual interest rate, i. Unless otherwise specified, within this section the units of time for n will be in years, and the interest rate i will be expressed as an annual rate.

Note: If n is expressed in months, the interest, i, must be expressed as a monthly rate (or one-twelfth of the annual rate). If n is expressed in years, the interest is expressed as an annual rate.

The present value factor for a regularly recurring cost (uniform-series present worth) is calculated using equation 8–26:

$$\text{Present value factor} = \left(\frac{P}{A,n,i}\right) = \left[\frac{1-(1+i)^{-n}}{i}\right] \qquad \text{(eq. 8–26)}$$

where:

P/A = represents the present value factor of a uniform series of payments, A

n = time period of consideration (typically the expected life of the equipment under consideration)

i = interest rate in decimal percent

Using this relationship and applying the present value factor for a series of uniform payments yields equation 8–27:

$$PV = A\left[\frac{1}{i}\left(\frac{i}{1-(1+i)^{-n}}\right)\right] \qquad \text{(eq. 8–27)}$$

where:

PV = present value of a series of equal payments

A = amount of each uniform payment

i = interest rate for the payment period

n = number of payments

The portion of the equation in brackets,

$$\left[\frac{1}{i}\left(\frac{i}{1-(1+i)^{-n}}\right)\right]$$

is the present value factor for a series of uniform payments, A.

A table of present value factors for an annual series of equal payments is provided in appendix C, table 8–C1. In the table, the annual payment (A) is set equal to 1 dollar, and the present value is then calculated by multiplying the present value factor by the dollar amount of the annual payment. Similar tables for other types of present value factors are available in economic references or can be developed using a spreadsheet.

Initial cash expenditure is a present cost and can be included in the economic evaluation using equation 8–28

$$PV = C + \frac{A}{i}\left[\frac{1}{i}\left(\frac{i}{1-(1+i)^{-n}}\right)\right] \qquad \text{(eq. 8–28)}$$

where:

C = present cost (present value) of an initial expenditure, dollars (no adjustment of C is necessary)

A = amount of each uniform payment

i = interest rate for the payment period

n = number of payments

If specific items have differing rates of interest, the present value of each item must be individually calculated. Note that in equation 8–28, initial cost, C, is already a present value and is not adjusted by the present value factor. Example 8–16 demonstrates the method of calculating present value.

Estimates for useful life and maintenance costs for pumping plant components are provided in table 8–8. By substituting the useful life in years, for the value of n in equation 8–28 and the estimated annual cost for the value of A, the present value cost of each component can be calculated. The present value of components with differing useful lives must be determined separately. An example with differing component lives will be demonstrated in a later example.

Future value factor—The future value (FV) of an investment is determined by multiplying the present value (PV) of the investment by a future value factor. In equation 8–29, the expression $(1+i)^n$ is the future value factor for an investment. The nominal periodic interest rate (i.e., rates quoted by lenders) has inflation factored into the quoted rate. Rates are often expressed in annual terms, and in that case, the period n would be expressed in years. If monthly interest rates are used, n would be expressed in months. To express an annual interest rate as a monthly interest, the annual rate is divided by 12.

$$\left(\frac{P}{F},n,i\right) = P(1+i)^n \qquad \text{(eq. 8–29)}$$

Future value with inflation—While interest rates increase the future value of money, inflation, or the upward movement in price of goods and services, decreases in the future value of money. The effect of the inflation factor is to reduce some present value (PV) to the future value (FV) as determined by equation 8–30, below. In equation 8–30, j is the periodic inflation rate and n is the number of periods, applied similarly to the future value factor for compound interest, above. A negative inflation rate would be used to represent a period of deflation (the downward movement in the cost of goods and services).

$$\left(\frac{F}{P}, n, i\right) = \frac{P}{(1+j)^n} \qquad \text{(eq. 8–30)}$$

Two common measures of price inflation and deflation are the Consumer Price Index (CPI) and the Producer Price Index (PPI). The CPI is a measure of the change in price for a specific set of consumer goods and services, such as gasoline, food, clothing, and automobiles. The CPI measures price change from the perspective of the purchaser. The PPI measures the average change over time in the selling prices received by domestic producers for their output. The prices included in the PPI are from the first commercial transaction for many products and some services. Although both indices are used as a measure of inflation, the PPI is considered more accurate. Data for CPI and PPI can be obtained from the U.S. Bureau of Labor Statistics.

By combining the present value factor for interest with the present value factor for inflation, a single formula, equation 8–31 can be used to express their combined effects.

$$FV = PV\left[\frac{(1+i)^n}{(1+j)^n}\right] \qquad \text{(eq. 8–31)}$$

where:

FV = future value of an item
PV = present value (year zero)
i = interest rate
n = time period
j = inflation rate

Table 8–8 Useful life and annual maintenance costs for pumping plant components

Item	Estimated useful life (h)	Estimated useful life (yr)	Annual maintenance (% initial cost)
Well and casing		20	0.5–1.5
Plant housing		20	0.5–5
Pump, centrifugal	32,000–50,000	15	3–5
Pump, turbine:			
Bowl(s)—about 50 percent of cost of pump unit	16,000–20,000	8	5–7
Column plumbing etc.	32,000–40,000	15	3–5
Power transmission			
Gear head	30,000	15	15
V-belt	6,000	4–8	5–7
Flat-belt, rubber and fabric	10,000	6–10	5–7
Flat-belt, leather	20,000	8	5–7
Electric motor	50,000–70,000	25–35	1.0–3.0
Diesel engine	28,000	14–22	14–22
Gasoline or distillate engine			
Air-cooled	8,000	8–12	8–12
Water-cooled	18,00	10–16	10–16
Propane engine	28,000	14–22	14–22

Sources: USDA-NRCS. 210-NEH, Section 15, Chapter 8, Cost of Pumping
Wade and Borman. Economic Considerations for Florida Citrus Irrigation Systems. Univ. of Florida, IFAS (2003)

There are real and nominal rates for interest and for price escalation. The real interest rate (or discount rate) is one that excludes the effects of inflation.

To avoid erroneous conclusions in economic analyses, do not mix the use of nominal rates (i) with real rates (i´). Indicate clearly in supporting documents whether nominal or real rates are used.

By defining the factor for the real discount rate, i´, as:

$$\left[\frac{(1+i)^n}{(1+j)^n}\right]$$

then,

$$FV = PV(1+i')^n$$
$$= PV\left[\frac{(1+i)^n}{(1+j)^n}\right]$$

The real rate of return reflects the effect of making future payments on an investment with cheaper (inflated) dollars. The derivation equation 8–32 provides i´, which is the real cost of borrowing determined in constant dollars:

$$i' = \frac{i-1}{1+j} \qquad \text{(eq. 8–32)}$$

where:
i = interest rate
j = inflation rate
i´ = real interest or discount rate

(4) Escalating energy costs

A trend in recent decades is that energy costs escalate at a greater rate than inflation. Rising energy costs can be evaluated by applying a modification of the present value formula to address energy cost increases as an escalating uniform annual payment or the present value of an increasing annuity.

The energy escalation rate, e, can be determined from historical energy prices. However, as with the discount rate, i, the effects of inflation are imbedded within e. In a process similar to that for removing the effects of inflation to determine the real discount rate, the real rate of energy escalation, e´, is determined.

The real energy escalation rate is then:

$$e' = \frac{e-1}{1+j} \qquad \text{(eq. 8–33)}$$

If a database of prices of energy is known over a period of time, the rate of price escalation is derived using the future value equation 8–33, and substituting the rate of price escalation, e, for the interest rate, i. The manipulation of the equations provides equation 8–34.

$$e = \left(\frac{F}{P}\right)^{\frac{1}{n}} - 1 \qquad \text{(eq. 8–34)}$$

where:
e = annual rate of energy cost escalation
F = future price of energy
P = present price of energy
n = the time period over which F and P are evaluated, years

Note: If the time period is expressed in months, the escalation rate will be expressed in monthly terms.

If the rate of inflation is known, the real rate of price escalation can be determined from fuel market prices reported in current dollars. The determination of the real rate of the energy escalation, e´, is shown in example 8–17.

The decision to install one motor over another is a decision often encountered by engineers. Take, for example, an electric motor versus a diesel engine for powering a pump; the analysis must address not only the installed cost of each power drive, but also differing maintenance requirements, life of components, and cost escalation for both diesel fuel and electricity. Typically, the cost of other structures, such as wells, sumps, and plumbing, will be the same for both. The following description uses the nominal rates for discount rate and inflation, but real rates could be used in their place. An example of calculating price escalation rates is shown in example 8–17.

Two equations are provided. Equation 8–35 is for the situation in which the interest and escalation rates are not equal. Equation 8–36 applies when the interest rate equals the escalation rate.

Example 8–16—Present value calculation using constant interest rate

Given:
The cost of a standard efficiency motor = CSE = $4,500

Annual electrical power consumption = $15,000

Motor life = 20 years

The cost of a high efficient motor = CEE = $5,500

Annual electrical power consumption for standard-efficiency motor = $14,250

Motor life = 20 years

Interest, i = 4 percent

Assume all other costs are equal (installation, maintenance, and motor life) for the two motors.

Note: The use of 20 years for motor life is for example purpose only. Expected motor life varies due to motor operating conditions (annual hours of operation, percent of full load operation, ambient temperature, etc.).

Find:
Determine the more cost effective alternative.

Solution:
Using the present value formula, equation 8–29:

Standard efficiency motor

$$PV_{SE} = 4{,}500 + \frac{15{,}000}{0.04}\left[1 - \frac{1}{(1+0.04)^{20}}\right]$$
$$= \$208{,}354$$

High efficient motor

$$PV_{SE} = 5{,}500 + \frac{14{,}250}{0.04}\left[1 - \frac{1}{(1+0.04)^{20}}\right]$$
$$= \$199{,}162$$

Or, from table 8–C1, for (i=4%, n = 20) the present value factor is 13.5903.

$$PV_{SE} = \$4{,}500 + 15{,}000[13.5903]$$
$$= \$208{,}354$$

$$PV_{HE} = \$5{,}500 + 14{,}250(13.5903)$$
$$= \$199{,}162$$

Conclusion: Comparing options, the energy-efficient motor has a lower present value than the standard-efficiency motor and is therefore more cost effective considering the cost of power over the 20-year life.
The cost savings for the HE option is calculated as:

$$\text{Cost savings} = PV_{SE} - PV_{HE}$$
$$= 208{,}354 - 199{,}162$$
$$= \$9{,}192$$

$$PV = C + A\left[\frac{(1+e)}{(i-e)}\left(1-\frac{(1+e)^n}{(1+i)}\right)\right] \quad \text{for } i \neq e \qquad \text{(eq. 8–35)}$$

$$PV = C + A(n) \quad \text{for } i \neq e \qquad \text{(eq. 8–36)}$$

where:

PV = present value of a series of escalating annual payments
C = present cost of the electric motor or engine
A = current annual cost of energy (diesel, electric, natural gas, gasoline, etc.)
e = real energy price escalation rate
i = interest rate (inflation is included in the interest rate)

Example 8–17—Rate of price escalation

Given:

Diesel fuel cost $1.50 per gallon on January 1, 2003
Diesel fuel cost $2.29 per gallon January 1, 2009
The annual rate of inflation over this period was estimated at 2.5 percent, or j = 0.025

Find:

The energy price escalation rate, e, for diesel fuel for the given time period
The real rate of energy price escalation, e´ (inflation removed from rate)

Solution:

Solving for the rate of energy price escalation, e:

Using equation 8–34 with F = $2.29, P = $1.50, n = 6 years—

$$e = \left(\frac{F}{P}\right)^{\frac{1}{n}} - 1$$

$$= \left(\frac{2.29}{1.50}\right)^{\frac{1}{6}} - 1$$

$$= 0.073 \text{ annual rate}$$

The real rate of energy price escalation, e´

Using equation 8–33—

$$e' = \frac{e-j}{1+j}$$

$$= \frac{0.073-0.025}{1+0.025}$$

$$= 0.047 \text{ annual rate}$$

The energy cost escalation rate, e´, that should be used in the above time value of money calculations is the real rate of escalation that excludes the rate of general price inflation. Example 8-18 shows how to calculate the present worth with escalation. Present value factors derived using equations 8–35 and 8–36 can be found in appendix D, table 8D–2 (Rushing et al. 2011). Example 8–18 shows how energy escalation can be included in comparison of the two motors used in example 8–14.

(c) Nebraska Pumping Plant Performance Criteria

Personnel at the University of Nebraska developed a set of performance standards for pumping plants (table 8–9). Comparison to the Nebraska criteria indicates how well the pumping plant is performing and can determine if excess energy is being used. Depending on the amount of energy used, a decision may be made regarding adjustments, repairs or replacement.

Example 8–18—Present value of motor with escalating annual cost of energy

Given:

C_{SE} = $4,500 = standard-efficiency motor cost
A_{SE} = $15,000/year = current annual energy use for standard-efficiency motor
C_{HE} = $5,500 = energy-efficient motor cost
A_{HE} = $14250/year = current annual energy use for high-efficiency motor
n = 20 years = electric motor life (same for both motors)
i = 0.04 (4%) = interest rate (or alternative rate of return)
e = 0.03 (3%) = as the escalating rate of rise for energy cost

Find:

Compare the two motors. Determine the most cost-effective option and energy savings for an energy cost escalation rate of 3 percent.

Use the modified uniform present value function to make the comparison.

Solution:

Applying equation 8–35 for the modified uniform series present value of an annual series, the present value is:

$$\text{The discount factor, } \left[\left(\frac{1+e}{i-e}\right)\left(1-\left(\frac{1+e}{1+i}\right)^{n}\right)\right]=18.0986$$

Applying the discount factor to the two conditions:

Standard efficiency motor

$$\begin{aligned} PV &= C_{SE}+(A_{SE})\times(\text{Discout factor}) \\ &= \$4{,}500+(15{,}000)(18.0986) \\ &= \$275{,}979 \end{aligned}$$

High efficiency motor

$$\begin{aligned} PV &= C_{HE}+(A_{HE})\times(\text{Discout factor}) \\ &= \$5{,}500+(15{,}000)(18.0986) \\ &= \$263{,}405 \end{aligned}$$

The high-efficient motor is the most cost-effective option for this case. The cost savings of the HE option in present dollars is calculated as:

$$\begin{aligned} PV_{SE}-PV_{HE} &= \$275{,}979-263{,}405 \\ &= \$12{,}574 \end{aligned}$$

The Nebraska Pumping Plant Performance Criteria (NPC) represents the performance level that can be expected from a properly designed and maintained pumping system. It is a compromise between the most efficient pumping plant possible and the average pumping plant. Therefore, some pumping plants will exceed the criteria.

Nebraska criteria are expressed as the water horsepower (whp) produced from a unit of fuel for 1 hour and can be represented in the units of whp–h/unit of fuel. The performance of any pumping plant is represented by the same units. Performance is calculated by dividing the water horsepower produced by the fuel consumption of the pumping plant.

A percentage rating can be determined by comparing the pumping plant's performance to the NPC criteria. This is accomplished by dividing the performance of the pumping plant by the NPC performance criteria (eq. 8–37). For example, a diesel producing 75 whp and burning 6 gallons per hour would have a performance of 12.5 whp–h/gal (75 whp/6 gal/hr) comparing this to the diesel criteria of 12.5 whp-h/gal results in a rating of 100 percent. This pumping plant has met the criteria. If this plant had been consuming 8 gallons per hour of diesel, its performance would be 9.4 whp–h/gal (75 whp/8 gal/hr) and its performance rating would be 75 percent (9.4 whp–h/gal), divided by (12.5 whp–h/gal). In this case, the pumping plant would be performing below the criteria, using unnecessary fuel (2 gal/h).

$$\text{NPPC rating}(\%) = \left(\frac{\text{measured pumping plant whp-hr per unit of fuel}}{\text{NPPC whp-hr per unit of fuel}}\right)(100) \qquad \text{(eq. 8–37)}$$

(1) Criteria versus overall efficiency

The performance rating should not be confused with the pumping plant's overall efficiency. They are not the same. Overall efficiency is the ratio of the energy output of the pump (water horsepower) compared to the energy used; whereas, the performance rating is the ratio of the performance level of a pump compared to the standard performance criteria. The performance rating from the criteria does, however, relate to overall efficiency of the pump. For diesels, a pumping plant with a performance rating of 100 percent equates to an overall efficiency of 23 percent (table 8–9). The diesel

Table 8–9 Nebraska Pumping Plant Criteria (NPC) for energy sources

Energy source	Engine bhp-h 1/ per fuel unit	Pumping plant whp-h 2/, 3/ per fuel unit	Fuel units	Overall efficiency 4/ (%)
Diesel	16.66	12.5 5/	gallon	23
Gasoline	11.5	8.6	gallon	17
Propane	9.2	6.89	gallon	18
Natural Gas 6/	82.2	61.7	1,000 ft^3 (mcf)	17
Electricity 7/	1.18	0.885	kilowatt hour (kWh)	66 8/

1/ bhp-h (brake horsepower hours) is the work accomplished by the power unit with drive losses considered. This is the horsepower that drives the pump.
2/ whp-h (water horsepower hours) is the useful work accomplished by the pumping plant.
3/ Based on Nebraska Pump Criteria 75-percent pump efficiency.
4/ Efficiency given for electricity is wire to water efficiency, which is calculated at the pump site. Liquid or gas fuel is based on average BTU values.
5/ Criteria for diesel revised from 10.94 to 12.5 in 1981 to better reflect the engine efficiencies of diesel powered pumping plants found in the PUMP project.
6/ Assumes energy content of 925 BTU/cubic foot.
7/ Assumes 88–percent electric motor efficiency.
8/ Overall efficiencies vary from 55 percent for 5 horsepower to 67 percent for 100 horsepower.

pumping plant had a performance rating of 75 percent, however, it is not 75 percent efficient. Rather, if one wishes to base the performance on overall efficiency, the pumping plant would be considered 17 percent efficient (0.75 × 23% = 17%).

Remember, performance criteria are basically an index so that pumping plants can be compared to one another. The performance rating can be used to rate the pumping plant on a scale of 1 to 100, with 100 meaning the criteria have been met. For those pumping plants that exceed the criteria, the index goes beyond 100.

Where pump efficiency is not equal to 75 percent, the water horsepower-hours produced per unit of fuel can be estimated by multiplying the actual pump efficiency by the input horsepower-hours from the second column in table 8–9.

Drive loss efficiencies are built into the energy use values for NPC. Pumping plant efficiency calculations may be skewed if a close-coupled pump is compared to a deep well with a shaft of several hundred feet and its associated bearing friction losses. The drive efficiency for the deep-well turbine will be lower than for the close-coupled pump. Example 8–19 shows how to determine the engine rating as compared to the NPC.

(d) Internal combustion engines and fuel costs

An internal combustion engine (ICE) is often chosen to power pumps where:

- Electricity or other power sources are not readily available.
- Electric rates are extremely high.
- Availability of electric power is not reliable (power outages common).
- Pump portability is desired.

Typical fuel choices for ICEs include diesel, gasoline, propane, and natural gas. Their greatest variable cost for an ICE is fuel. For maximum fuel economy, the throttle setting of the engine should be selected such that the load under which it operates is within the manufacturer's power range recommendation. The compression ratio of an ICE has a marked effect on the rate of fuel consumption. Proper engine operation and maintenance is also critical for achieving maximum engine fuel efficiency. Among ICEs, propane-powered engines probably have the greatest variance in fuel consumption because they operate under a wide range of compression ratios. The Nebraska

Example 8–19—Determination of engine rating according to Nebraska Pumping Plant Criteria

Given:
Test results on a pumping plant powered by a natural gas engine shows it produces 80.8 hp-h output per mcf (1 mcf is 1,000 ft^3). The energy content of the natural gas is 975 BTU/ft^3.

Find:
What is the rating for the engine, as a percent of the NPC? (Determine for engine only, do not consider pump).

Solution:

$$(11.25)\left(\frac{\text{actual hp-h output}}{\text{actual BTU/ft}^3}\right)(100) = 11.25\left(\frac{80.8}{975}\right)(100)$$

$$= 93.2\% \text{ of NPPC rating}$$

Note: The rating is lower than 100 percent of the NPC rating, indicating some engine adjustments should be considered.

Pumping Plant Criteria (NPC) are given in table 8–9 for modern engines in good operating condition with pump operating at 75 percent efficiency.

A rating below 100 percent means that adjustments might provide better fuel economy. The cost of the adjustments should be weighed against fuel savings. The NPC values are not maximum criteria, but rather criteria felt to be acceptable for most conditions. Some pumping plants may exceed the NPC. An example of calculating the output per unit of fuel is shown in example 8–20.

(1) Fuel costs

Where fuel usage is measured in gallons per hour, fuel costs can be estimated by equations 8–38 and 8–39:

$$\text{Fuel cost/h} = (\text{bhp})(\text{fuel consumed, gal/bhp/h})(\text{fuel cost, \$/gal}) \quad \text{(eq. 8–38)}$$

$$\text{Total annual fuel cost} = (\text{cost per hour})(\text{total hours operated}) \quad \text{(eq. 8–39)}$$

(2) Diesel

Energy is often measured in British Thermal Units (BTU), and the energy content of No. 2-D diesel fuel is typically about 130,000 BTU per gallon, but can vary by as much as 5 percent.

Example 8–20—Internal combustion engine output energy per unit of fuel

Given:

A pump operates at an efficiency of 82 percent (determined from pump curve). It is powered by a properly tuned diesel engine in good condition. From table 8–9, the diesel engine and drive output is assumed to produces 16.66 horsepower-hour of energy per gallon of fuel, and fuel cost is $3.00 per gallon.

Find:

Water horsepower-hours per gallon of fuel consumed.

Water horsepower-hours per dollar of fuel cost.

Solution:

Water horsepower-hours per unit of fuel:

$$\frac{\text{pump output energy}}{\text{unit of fuel}} = \frac{82}{100}\left(\frac{12.5\ \text{bhp-h}}{\text{gal of diesel}}\right) = \frac{10.25\ \text{whp-h}}{\text{gal of diesel}}$$

Water horsepower-hours per dollar of fuel used:

$$\left(\frac{10.25\ \text{whp-hr}}{\text{gallon of diesel}}\right) = \frac{82}{100}\left(\frac{12.5\ \text{bhp-hr}}{\text{gallon of diesel}}\right) = 3.41\ \text{whp-hr/\$}$$

Notes:

The pumping plant used in this example exceeds the NPC standard due to the high efficiency of the pump (greater than 75 percent).

Similar calculations can be performed to compare costs for other fuel types.

Horsepower

Given the BTU content of diesel fuel, and the conversion factors, diesel power can be related to horsepower and pumping costs with equations 8–40 and 8–41.

$$1 \text{ gallon of diesel} = (130{,}000 \text{ BTU})\left(\frac{1 \text{ hp}}{2{,}545 \text{ BTU}}\right) = 51 \text{ hp-h} \qquad \text{(eq. 8–40)}$$

$$\text{cost per ac-ft pumped} = \frac{0.026877\,(\text{TDH})(\$/\text{gallon diesel})}{(\text{pump efficiency})(\text{drive efficiency})(\text{engine efficiency})} \qquad \text{(eq. 8–41)}$$

(3) Natural gas

The methane content of natural gas is typically 85 percent to 95 percent methane (CH_4) with the balance composed of ethane (CH_3), propane (C_3H_8) and other gasses. An energy content of 925 BTU per cubic foot is assumed in table 8–9, but BTU content of natural gas can range from 900 to 1,150 BTU per cubic foot, depending on the proportions of the mixture. Although a utility company's price for natural gas is often expressed in dollars per thousand cubic feet (mcf), the price is based on the BTU content of the gas. In estimating the cost of natural gas energy, consult the local utility provider for price and BTU content. Maximum efficiency of operation requires the air-fuel mixture of natural gas engines to be adjusted for the specific BTU content.

A natural gas with BTU content other than 925 BTU per cubic foot can be compared to NPC standards using this relationship:

$$\%\text{ of NPPC rating} = \left(\frac{\text{NPPC BTU/ft}^3}{\text{NPPC hp-hr output}}\right)\left(\frac{\text{actual hp-hr output}}{\text{actual BTU/ft}^3}\right)(100) \qquad \text{(eq. 8–42)}$$

Using NPC data for natural gas from table 8–9, the equation becomes:

$$\%\text{ of NPPC rating of natural gas} = (11.25)\left(\frac{\text{actual hp-hr output}}{\text{actual BTU/ft}^3}\right)(100) \qquad \text{(eq. 8–43)}$$

(4) Internal combustion engine maintenance

The cost of grease is negligible for both electric motors and engines, being limited primarily to drive line joints. However, the cost of lubricating oil and filter changes (for both fuel and oil) can be significant for engines, especially where operation is continuous and the total dynamic head is high.

Oil change intervals of 250 to 500 hours of operation are be common for diesel engines, but oil change frequency should be based upon manufacturer's recommendations rather than a generic schedule. Due to the cleanliness of most natural gas fuel, oil change intervals for natural gas engines are often in the range of 750 to 1,500 hours. However, where the natural gas is of low quality (i.e., high contaminant content, such as hydrogen sulfide) more frequent oil changes are advised.

Gear drive maintenance is necessary, but usually is neither costly nor time consuming. Right-angle gear drives (gear heads) used with engine powered pumps may require oil change intervals of 2,500 hours of operation or at least every 6 months (consult manufacturer for recommendations). For most irrigation systems, the irrigation season is less than 6 months, and 1 oil change per year is sufficient. Oil changes should be more frequent in dusty locations or where high temperatures degrade oil quality.

Always consult the manufacturer's recommendations for oil and filter service information.

Repair costs are difficult to estimate since they tend to increase with the age of the equipment. The cost of repairs is largely affected by engine quality, total hours of operation, and quality of maintenance.

(e) Life-cycle cost analysis

Life cycle cost analysis (LCCA) is used to evaluate the cost of investment alternatives over their service life. This approach works well in economies where expected future income and alternative investment rates are predictable with reasonable certainty (e.g., stable commodity prices and stable interest rates). During periods of high uncertainty or of low availability of investment capital, decisions may rest on application of a payback period analysis. The process for LCCA involves the integration of:

- initial capital investment costs
- operation, maintenance, and repair costs
- replacement costs
- residual or salvage values

Where the service lives of the individual components are not equal, use an evaluation time period that is the least common multiple (LCM) of those individual service lives. The LCM evaluation period is not the period of time that the investment must be owned in order for the cost comparison to be valid. Costs for removal, repair, replacement, and salvage values should be included in the evaluation. For example, a pump with a 15-year life and a motor with a 30-year life would require an evaluation period of 30 years (30 is the least common multiple of 15 and 30). The cost for a new pump, or for repair of the existing pump, along with the costs associated with removal and replacement, would be factored in at the end of the fifteenth year. Where two alternatives are evaluated, the evaluation period would be the least common multiple of components from each alternative. It should be noted that the LCM number of years may be far beyond the planning horizon of the irrigator, but that number is only necessary to provide a comparative evaluation. Due to uncertainties, decisionmaking is usually based on a payback period that is substantially shorter.

The present value (PV) of a future cost (FV) is calculated using the following formula, where i is the periodic interest rate, and n is the time scheduled replacement or repair of components can be calculated using:

$$PV = \frac{FV}{(1+i)^n} \qquad \text{(eq. 8–44)}$$

The equation is often displayed in a shorthand form: (P/F, i, n). Units of time for n and i must be the same. For example, if the interest rate is in percent per year, the units for n must be years. If the interest rate is a monthly compounded rate, the units for n must be months). Table 8D–3 provides present value factors derived using equation 8–44.

(1) Comparing two alternatives: diesel power versus electric power

The decision to install an electric motor or a diesel engine for powering a pump is commonly encountered by engineers. The analysis must address not only the installed cost of each power source, but also differing maintenance requirements, life of components, and cost escalation for both diesel fuel and electricity. Typically, the cost of other structures such as wells, sumps, and plumbing will be the same for both. Appendix 8E contains an example of how the LCCA is used to compare a pumping plant powered by electricity and diesel.

(f) Unit abbreviations and conversion factors

Table 8-10 gives of the common abbreviations and units used in this section of the manual.

623.0813 Pumping plant maintenance

The information in this section is excerpted from The New Mexico Irrigator's Pocket Guide, published by the National Center for Appropriate Technology (NCAT), January 2006. Reprinted with permission.

A properly maintained pumping plant will minimize input power requirements and operating expenses while maximizing system life and overall performance. The performance lifespan of the plant can only be achieved by developing and carrying out an effective operation and maintenance program. A record of operation and maintenance activities should be maintained to document maintenance and repair measures completed.

(a) General recommendations

In general, preserve all appropriate pumping plant components in good operating condition adhering to manufacturer's recommendations. Pumping plants may include components such as internal combustion engines, electric-powered motors, drive shafts, belt drives, gear drives, pumps, agitators, pipes, valves, and other appurtenances. An operation and maintenance plan that addresses site-specific components and facilities should be prepared for use by the operator. The plan should provide specific directions with regard to operating and maintaining equipment and facilities to ensure correct function of the pumping plant. The plan should include procedures to address the following, as a minimum:

- Disconnect electrical service just before retrofitting any kind of electrically driven equipment, and confirm the absence of stray electrical current.
- Ensure all safety features are in place and periodically inspect to access functionality.
- Examine or check all pumping plant elements and appurtenances, as appropriate.
- Follow manufacturer's startup instructions and procedures for operation of the pumping plant.

Table 8–10 Abbreviations and units

Abbreviations			
kilowatt-hours	kwh	total dynamic head, feet	TDH
cubic foot	ft^3	acre foot	ac-ft
gallons	gals	horsepower hour	hp-hr
horsepower	hp	brake horsepower	bhp
water horsepower	whp	thousand cubic feet	mcf
high efficient electric motor	HE	revolutions per minute	r/min
standard-efficiency electric motor	SE	open drip proof (electric motor)	ODP
overall pumping efficiency	OPE	totally enclosed fan cooled (electric motor)	TEFC
National Electrical Manufacturers Association	NEMA	vertical turbine pump	VTP
least common multiple	LCM	Energy and Security Act	EISA
Energy Policy Act	EPAct	high-efficiency electric motor	HE
Conversion factors:			
1-acre-foot	43,560 ft^3	1 hp	0.746 kw
1 gallon	7.48 ft^3		

- Carry out scheduled upkeep of all mechanical components (power unit, pump, drive train, and so forth) in accordance with manufacturer's recommendations.
- As applicable, check for fuel and lubricant leaks of the power unit, fuel storage facilities, and fuel lines, frequently . Repair as needed.
- Maintain adequate flow capacity to the pumping plant by periodically checking and removing debris, as necessary, from trash racks and inlet structures.
- Ensure design capacity and effectiveness by regularly removing sediment in suction bays.
- If applicable, inspect and service all antisiphon devices.
- Ensure all automated components of the pumping plant are operating as designed by regular examination and assessment.
- Examine and service secondary containment facilities, as applicable.
- Preserve good working condition of grounding rods and wiring on all electrical equipment.
- Safety shields should be checked and serviced on pumps, motors, and other electrical and mechanical equipment.
- Check (and repair when necessary) bases and mountings for all pump, motor, engine, and gear drives to ensure durability and ability to hold the pumping plant components in place without vibration.
- Ensure leakage meets manufacturer's recommendations by replacing, repacking, or tightening pump seals as needed.
- When winterizing, all pumps, pipes, and valves that are subject to freezing should be drained. A noncorrosive antifreeze solution should be added to parts of the system that cannot be drained.
- Maintain constructed grade for pumping plant inlet structures and adjacent natural or constructed channels by replacing weathered or displaced rock riprap.
- Avoid water ponding around the pumping plant by reshaping surface drainage as needed.
- Vandalism, vehicular, and livestock damage to appurtenances, foundation, support structures, or earthen areas surrounding the plant should be fixed immediately.
- All rodents or burrowing animals around the pumping plant should be eradicated or otherwise removed. Any damage caused by their activity should be immediately repaired.

(b) Pumping plant maintenance of specific components

Each irrigation system needs normal maintenance to run efficiently and dependably. Inadequately maintained systems squander energy and money and are prone to equipment failures that cause harvest deficits as well as yield cutbacks.

Warning: Recommendations included in this section are not complete and may not be appropriate for all systems. Seek advice from owner's manuals for suggested servicing methods. Always adhere to manufacturer's recommendations if they differ from those incorporated here.

(1) Electric motor

Relative longevity of the motor, lower maintenance costs, reliability, and ease of operation are benefits of electric power. An electric motor (fig. 8–91) can be operated from no load to full load without receiving damage and also will deliver full power during its life.

Figure 8–91 Electric motor powering a turbine pump at LSU Rice Research Station near Rayne, LA

Mounting bolts can vibrate loose. Make it a habit to frequently check that the motor is securely bolted to its platform. Make sure that the motor or other parts are not receiving damage from rubbing or rotating parts.

An electric motor is an air-cooled piece of equipment. It needs as much ventilation as possible. Reduced motor life is caused by excessive heat. Protect equipment from overloads, undervoltage, and excessive heating by installing safety devices.

When possible, prevent weather damage to electric motors by protecting them from the elements and keeping them dry. Check pump packing and keep it in good condition to protect motor windings. Minerals in pumped water can, through evaporation or precipitation, attach to windings and cause early failure even if windings are protected from moisture. Higher-speed motors and pumps sustains more wear, for example, a motor that operates at 3,600 r/min versus one operating at 1,800 r/min. As a result, regular servicing is even more critical for the higher-speed components.

Maintenance tasks

At season startup:

- Clean out rodents, insects, and debris and remove tape on all openings.
- Locate and clean out the motor drain hole on the base or base support so water will not be trapped under the air intake.
- Following manufacturer recommendations, clean the oil pan and change oil in reduced-voltage starters.
- Wear eye protection when removing dust and debris from moving motor part using vacuum suction or air pressure (do not exceed 50 lb/in^2 of air pressure).

Periodically:

- Grass and debris must be cleared from the air ventilation opening on the motor. Make sure there is also a clear area around the motor to allow cooling air to have an unobstructed flow.
- Motor ventilation screens and openings need checking. As necessary, replace with machine cloth (1/4-inch mesh).

At end of season shutdown:

- The motor needs to be covered with a water-resistant breathable tarp to protect the motor while maintaining air circulation to prevent condensation.

Motor electrical system

Connectors expand and contract during the year due to wide temperature fluctuations. This can cause electrical connections (especially in aluminum wire) to loosen and cause heat buildup and arcing at electrical terminals. A motor will operate at less than its rated voltage due to voltage drop across loose connections, increasing internal motor temperature. Motor winding insulation will break down from increased heat, adding to the possibilities of electrical shorts and motor failures. Decreased motor efficiency can result from a loose or broken connection causing an imbalance in three-phase power and potentially damage to motor windings.

Warning: Perform lock-out/tag-out procedures and ensure power is off at the utility disconnect switch before conducting maintenance tasks on any system served by electrical power. Test circuits and equipment to make sure they are de-energized. Mechanically lock the system to the off position and tag it so others know not to restore power until safe to do so. In some locations it may be necessary to have the utility company shut the power off.

Figure 8–92 shows a lock-out device that allows multiple workers to individually prevent restoration of power (up to six locks for the device shown).

Maintenance tasks

At season startup:

- Examine insulation of motor windings. Check with a motor repair shop for direction if the windings are excessively grease-covered.
- Following manufacturer's directions, inspect all safety switches.

Twice a year:

- Electrical connections from meter loop to motor should be examined for corrosion and cleaned if necessary.

- Cleaning should be done with an antioxidant that meets electrical code requirements. The wiring (especially aluminum) and connectors should be coated with the antioxidant.
- Tighten and, if necessary, retape electrical connections from the meter loop to the motor.
- Wire and connections that show heat damage or burnt insulation need to be replaced with new material.

Motor bearings

Following manufacturer instructions, grease the motor. Motor speed, power draw, load, ambient temperatures, exposure to moisture, and seasonal or continuous operation will affect interims between lubrication (table 8–11). Over or undergreasing bearings may cause unnecessary damage. Avoid greasing electric motors daily.

Electric motor bearings require grease specifically for electric motors. A grease gun should be filled with electric motor bearing grease and labeled so it won't be confused with other types of lubricating grease.

Caution: If owner's manuals instructions differ from these guidelines, follow lubrication instructions in owner's manuals. Some motor bearings, especially newer motors, may have sealed bearings that cannot be greased.

Maintenance tasks:
Eliminate any accumulated moisture by changing grease at recommended intervals:

- After removing bottom relief plug, ensure passageway is clean by removing hardened grease.
- Using the appropriate API number of grease and grease gun, fill the housing until old grease is expelled.

Caution: Do not overlubricate the motor. Stop adding grease and have the motor inspected by a qualified mechanic if old grease is not expelled as the new grease is pumped in. The motor could overheat and have its service life reduced if seals are blown and grease is pushed into motor windings by adding new grease without old grease being removed.

- Remove all surplus grease through the bottom grease port by running motor 5 to 10 minutes.
- After turning off the motor, remove a small amount of grease from the grease port using a screwdriver or similar device. This allows for grease expansion during full-load operation.
- Replace grease plug and tighten.

Figure 8–92 Lockout and tagging of power switch

Table 8–11 Recommended regreasing periods for motors

	Horsepower range		
Type of service	1–9	10–40	50–150
Normal duty (8–hour day)	8 mo.	6 mo.	4 mo.
Heavy duty (24-hour day)	4 mo.	3 mo.	2 mo.

(2) Control panel maintenance

(i) Control panel safety precautions

The main disconnects should never be used to start or stop a motor. It is not designed for this purpose. Excessive wear to the main disconnect may come from using it to start and stop the motor. This wear may cause arcing. The start and stop button was designed for this purpose.

Have utility companies clear the overhead lines to your control panel's service of obstructions from tree branches or other items.

Have a qualified electrician check your panel (fig. 8–93) to make sure that:

- Fuses of the correct rating, size, and type are used to protect control circuits.
- The meter and motor side of the buss and breaker are protected with a properly installed lightning arrester. The arrester should be installed in a secure box to protect personnel in case of explosion.
- The service panel is independently and properly grounded.
- Good condition service head grommets are in place.

Figure 8–93 Pump control panel near Nampa, ID

At season startup and periodically:

- Examine insulation at electrical conductors. Contact a motor repair shop if insulation appears impaired by high temperatures.
- Inspect control panel and contact an electrician if stray voltage is over 5 volts.
- Replace and repair wiring damaged by rodents.
- If the lighting arrestor functions and has been damaged, there is a possibility the control panel is carrying a charge. If the lightning arrestor is mounted on the outside surface of the panel, always examine its condition before touching the control panel.

(ii) General maintenance

A megohmmeter (megger) is used to measure electrical resistance and detect potentially harmful moisture in windings. Have your electrician or pump maintenance person examine the control panel, motor, conduits, and other electrical connections with a megger device.

If the main disconnect switch has been left open or off for even a few hours, copper oxide can form, resulting in poor contact and overheating. Operate the switch several times before leaving it closed or in the on position. Poor contact or poor grounding can be caused by any type of corrosion and result in direct or high-resistance shorts.

When testing electrically powered equipment with a volt meter, take note of the subsequent caution. These go-no go parameters are altered from some standards which may have previously been used or seen in other sources.

Warning: Use a voltmeter to make one or the other of the following test before opening a control panel:

- Inspect metal elements that are being worked with for voltage between the component (control panels, pumps, and structural components) and the systems electrical ground rod. Voltages greater than 0.5 volts measured between a motor, exterior of the control panel, or structural component to the rod is not normal and might point to a difficulty with the electric equipment or wiring.

- If the voltmeters leads are not long enough to measure from the metal component to the ground rod, an alternate would be to measure voltage from the metal components to earth (soil), commonly called stray voltage. Depending on conditions around the system, an amount above five volts to the earth (soil) might be a warning of a possible problem with the electrical supply system, onsite electrical wiring, or equipment. Contact the power supplier or an electrical professional if the voltage to earth (soil) is above 5 volts, to examine the system before any further testing is done.

If there is any question about the safety of the control panel or other equipment, ***WALK AWAY AND CALL A QUALIFIED ELECTRICIAN***. Have the power supplier or utility disconnect the power if needed. Always play it safe!

(iii) Maintenance tasks

At season startup:

- The power switch should be in the off position. The fuses should not have been installed yet. It is important that this be checked before startup. All fuses that were removed at the end of the previous season should be tested to ensure that they are not blown.
- Clean all dirt, dust, and grime from contacts. Use a fine file or very fine sandpaper to clean copper contacts. Badly pitted or burned contacts should be replaced. Silver or silver-plated contacts should never be filed. Leave contacts clean and dry so dust won't collect.
- Check magnetic starter switch contact points, if they are at all accessible.
- Throughout the season, the drain hole should be inspected to make sure it remains free of debris, rodent droppings, insects, and other animal or bug nesting material and debris. This step is a must before starting at the first of the season.
- System should be properly checked before installing fuses.
- Never use fuses that are too short for fuse brackets.
- Operate the disconnect switch slowly to check for alignment of blades and clips.
- Oxidation on the contact points can be cleared by opening and closing the disconnect switch several times.
- Fuses with the wrong rating should not be used. Make certain replacement fuses have the correct rating for the intended load and protection
- Install fuses, check for stray voltage, and follow system startup procedures.

At end of season shutdown:

- Check that switches are in the off or open position.
- Lock the panel in the off position. Prevent accidental startup, vandalism, and corrosion by fuses (store fuses in a dry location).
- Moisture and dust are hard on the system, so make sure to protect exposed control boxes with a waterproof tarp.

(3) Internal combustion engine

Habitably inspect mounting bolts to make sure the engine is securely bolted to its platform. Engine vibration can loosen bindings. Frequently inspect coolants, oil levels, fuel, and fan belts. If coolant or oil level is low, examine lines for seepage. Inspect injectors and fuel lines for leakage on diesel engines. Record all maintenance for engines.

For internal combustion engines (fig. 8–94) running on diesel:

Figure 8–94 Internal combustion engine gauges

- Keep track of oil changes.
- Record fuel usage.
- Clean injectors and turbocharger.
- Inspect engine and pump r/min.
- Occasionally check water discharge pressure and pump flow rate.

For non-diesel internal combustion engines:

- Monitor oil changes, oil filter, and air filter replacements.
- Observe fuel usage, replace spark plug, tune-up, and switch out spark plug wires.
- Inspect gas pressure at carburetor of turbocharger and check pump and engine r/min.
- Periodically inspect pump flow rate and water discharge pressure

Engine startup (beginning of season):

Maintenance tasks:

- Tighten up belts and get rid of tape on all engine openings and the distributor cap.
- Make sure batteries are charged and connected.
- Service fuel filters every time and swap out disposable fuel filters with new ones.
- Make sure shutoff valve to fuel tank is open.
- Override safety switches that safeguard against low water pressure, loss of oil pressure, and overheating before starting the engine. Initiate the safety switches after engine has reached operating speed.
- Turn off the engine after running for 10 minutes and inspect oil and coolant levels.
- Inspect for any leaks in the engine and pump caused by drying gaskets.

Engine air system:

Maintenance tasks

- Cleaning can alter filters, which may then allow more dirt to enter. At season startup, swap disposable air filters with new ones.
- At season startup, filter bath in oil-bath air cleaners should be cleaned and refilled. After servicing reassemble the air cleaner.
- If the air induction system is equipped with a prescreener, the screen should be brushed to remove blockage periodically.
- When indicated by the service indicator signals change the air filter.

Engine electrical system

Natural gas has a higher octane value than automotive gasoline. Natural-gas-powered engine efficiency may be increased and fuel consumption reduced by setting the ignition timing to take advantage of the higher octane. Recommendations on how to do this can be obtained by consulting the engine manufacturer.

Maintenance tasks

At season startup (as applicable to engine type):

- Inspect and replace breaker points as needed.
- Grease the rotor and set dwell angle or the gap.
- Timing should be checked and adjusted if necessary.
- All connecting terminals should be cleaned after cleaning cover with protectors.
- All ignition system and electrically operated safety switches should be sprayed with silicone to prevent deterioration.

Twice a year (as applicable to engine type):

- All electrical connections and terminals need to be tightened and inspected for corrosion, and then apply corrosion inhibitor (not grease).
- If engines have spark plugs, the plugs need to be cleaned and regaped or replaced with plugs in the appropriate heat range.
- Take off the distributor cap and, using silicone, lubricate the governor weights (do not use oil).

Engine oil

Manufacturer-recommended oil should only be used. Mark each engine with a tag identifying the proper oil.

Maintenance tasks

Twice a year:

- Grease or oil driveshaft, U-joints, and other engine accessories.

- The crankcase oil and oil filter should be changed if the engine was not protected during shutdown, or if the oil has not been changed within the last year.

Engine fuel and coolant

Maintenance tasks

- The fuel filter should be removed and cleaned or replaced twice a year.
- Inspect to see that the radiator cap is on tight and that gaskets aren't cracked. Frequently examine that the fluid level and degree of coolant protection are satisfactory.
- Intermittently check the fuel tank cap and oil filter cap to make sure they are on tight and that gaskets aren't cracked.

Engine shutdown (end of season)

Maintenance tasks

- Shut the fuel valve and drain all fuel from the tank. Also drain all fuel and water lines. Drain vaporizer-regulator if LP gas is used.
- Take out each spark plug and fill the hole with a tablespoon of clean motor oil. After securing plug wires away from plug hole, turn crankshaft by hand to oil piston and rings. Return spark plug and wires.
- Where the cap joins the distributor housing, use duct tape to seal the distributor cap.
- Using duct tape, seal all engine openings, such as crankcase breather tube, air cleaner inlet, and exhaust outlet.
- If the engine water cooled, drain and refill the radiator with an antifreeze mixture including a rust inhibitor.
- Release tension from belts.
- Protect batteries from freezing by removing and storing in a cool but not freezing location.
- Cover with a water-resistant tarp if engine is to remain outside.

(4) Power source to pump drives

To protect operators, shield all drives and appurtenances that are equipped with moving parts.

(i) Right-angle gear drive

Every time on site:

Check gear drive for adequate oil level during pumping plant operation and replenish oil as needed to maintain fluid levels in the gear head. Use only manufacturer-recommended lubricants (fig. 8–95). Maintenance might be needed or mechanical problem exists if unusual noise, seal leakage, and unusually high gear drive temperatures are present.

Periodically:

Right-angle gear drive lubricant ought to be changed a minimum of every 2,500 hours or 6 months, whichever comes first. Operating in moist, dirty, or high-temperature conditions may necessitate much more frequent fluid changes. Operating under low ambient air temperatures may require the use of approved synthetic lubricants. These types of lubricants could lengthen fluid change intervals. Manufacturer's recommendations should be implemented concerning accepted lubricants for different gear drive models, as well as working conditions. For fluid capacities and location of drain and filler plugs on different gear drive models consult manufacturer materials (Amarillo Gear Company 2005).

(ii) Belt-drive maintenance

Maintenance tasks

Every 2 Weeks:

Perform a belt drive inspection (fig. 8–96). Look for debris that may have become lodged in the belts. Check that the guard is still in place and secure. Listen for any unusual vibration or sound while observing the guarded drive in operation. A well-maintained drive operates smoothly and quietly.

At every system shutdown:

Examine belt drive guard with regard to looseness or deterioration. Clear away trash, dust, and grime that has accumulated on either the interior or the exterior surface of the guard. Deposition of dirt on the guard acts as insulating material and could affect the temperature of the belts. An internal temperature increase of 18 degrees Fahrenheit could reduce belt life by 50 percent.

Figure 8–95 Right-angle gear drive

Figure 8–96 Belt drive with belts exposed for inspection

Examine belts for proper tightness. Inspect and thoroughly clean both sheave grooves. They should be clean and free of any oil or contaminants. Ensure the motor takeup slots or rails are clean and lightly lubricated and the motor mounts are adequately tightened. Take preventative measure against overlubricating bearings, as this may cause oil or grease to splash on the guard. If oil dripping from the guard gets on the rubber belts, they may expand and become deformed, leading to early belt failure.

At start and end of season:

- Always turn off the power to the drive. Lock the control box and tag it with a warning sign "Down For Maintenance. Do Not Turn Power On." Make sure the power is turned off for the correct drive.
- Test to make sure correct circuit has been turned off.
- Place all machine components in a safe (neutral) position. Make sure moving components are locked down or are in a safe position. Make sure pumps cannot unexpectedly freewheel.
- Remove guard and inspect for damage. Check for signs of wear or rubbing against drive components. Clean and realign guard to prevent rubbing if necessary.
- Inspect belt for wear or damage. Replace as needed.
- Inspect sheaves or sprockets for wear and misalignment. Replace if worn.
- Inspect other drive components, such as bearings, shafts, motor mounts, and takeup rails.
- Inspect static conductive grounding system (if used) and replace components as needed.
- Check belt tension and adjust as needed.
- Recheck sheave or sprocket alignment.
- Reinstall belt guard.
- Turn power back on and restart drive. Look and listen for anything unusual.

These were taken from the Belt Drive Preventive Maintenance and Safety Manual published by the Gates Corporation© in 2008.

(iii) Tractor power take off (PTO)

Reasonable care should be exercised to be sure that the power-takeoff shaft is properly aligned. The universal joint-yokes on the telescoping portion of the power-takeoff shaft should be in the same plane. This is necessary to eliminate as nearly as possible the variable speeds of rotation and the resulting vibration, shock, and universal joint wear. Before each use, check drive covers and lubricate drive shafts and U-Joints (fig. 8–97).

(iv) Drive shaft

Inspect drive covers. Lubricate drive shafts and universal joints (fig. 8–98). Leave plenty of clearance and always walk around when working with drive shafts. Never go over or under.

Maintenance tasks

Tractor PTO, drive shaft, and other appropriate motor or pump sections covers maintenance to direct drives.

(5) Centrifugal pump maintenance

(i) Pump (General)

Maintenance tasks:

Startup (beginning of season):

Make sure the drain hole on the underside of the pump is clean.

Figure 8–97 PTO-driven pump

Twice a year:

- Eliminate moss and debris from pump inlet and outlet. Thoroughly clean piping and connections.
- Using a pipe dope or Teflon tape, tighten up all drain and fill plugs in the pump volute case to avoid air and water leaks.
- Examine the pump case for cracks or holes.
- Make sure screens on the suction pipe and other trash screening devices are clean.

Servicing impeller and wear rings:

If the pump is suspected of having clogged or damaged impeller, or that wear rings are worn, the pump should be dismantled (fig. 8–99). It is best to have this done by a qualified individual or a pump repair shop. Manufacturer's directions should always be followed when replacing wear rings.

Pump packing:

If a pump has been out of service for an extended period, packing may dry and harden, which can allow air to leak past the seal. When packing is adjusted properly, it should not require constant readjustment, but unless proper leakage (about 8 to 10 drops per minute) is running through the packing box, it could go dry. If packing becomes overheated and dries out, the shaft sleeve will eventually burn and score. Excessive dirt, silt, or sand in the water can also score the sleeve. Pump shaft sleeves with packing should be checked daily and kept in good condition.

Periodically inspect for an improperly greased or worn rotary shaft seal by running the pump and squirting oil on the shaft just outside the seal. A leak is indicated if oil is drawn into the seal. The pump can lose prime if air can leak into the pump through the packing box.

Maintenance tasks

Proper pump packing lubrication should be used to grease the packing box yearly (fig. 8–100). The grease tends to harden with less timely maintenance, making this task very challenging.

- If the packing box is furnished with a grease cup or grease zerk, protect the packing by adding a couple pumps of packing grease to the packing box to remove the remaining water.
- If a packing box does not have a grease cup or zerk, take out the last two packing rings and fill the packing box with packing grease until full. Discard the old rings and add two new rings. Force the grease into the following packing rings by gently tightening the packing gland, then loosen the gland.

Figure 8–98 Drive shaft with cover

Figure 8–99 Centrifugal pump impeller and packing

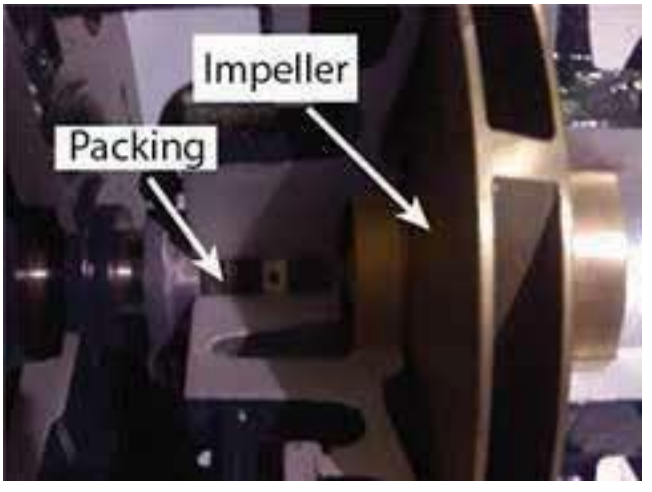

Replacing the packing

Leakage is essential for centrifugal pumps to avoid unwarranted wear on the impeller shaft sleeve. Packing ought to be adjusted to permit leakage at the manufacturer's recommended rate. Once the packing is burned and the shaft sleeve is scored, no amount of tuning will keep proper leakage for any period of time. If the packing is blackened (dried up and scorched) or has leaked overly during the season, it should be replaced. Old packing should be changed entirely if excessive leakage cannot be controlled by adding a new packing ring to the old packing.

Centrifugal pump shutdown (end of season)

Drain all water from pumps prior to freezing weather in cold climates.

Maintenance tasks

- Drain diaphragm-type hand primer by opening petcock.
- Coat with rubber preservative any discharge primer valve equipped with a rubber seat.
- Any other rubber parts should also receive a coating of preservative (e.g., a flexible coupling connecting the pump to the driver).

Figure 8–100 Pump packing

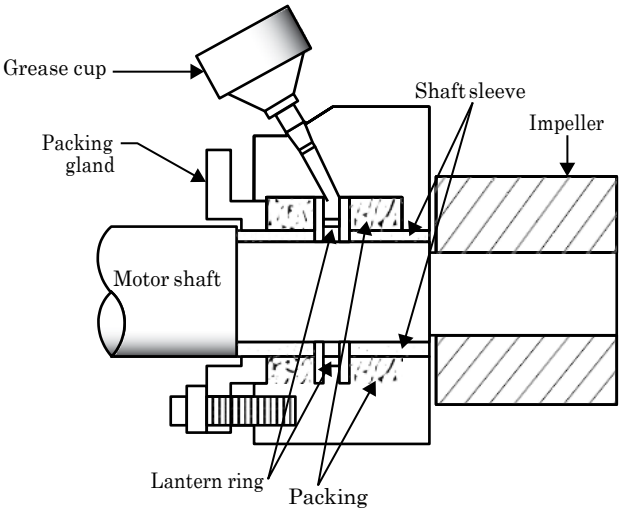

- Any exposed metal, such as the shaft, should be covered with protecting grease to avoid corrosion.
- To avoid rust and pitting, cover all oil- or grease-lubricated bearings with lubricant to keep moisture out.
- Ensure drain valves are not plugged, and drain water from the pump. If ice is a problem, remove suction and discharge piping.
- Closed the ball valve on the pressure gauge riser, then detach the pressure gauge and store inside.
- To ensure rodents and foreign material is kept out, seal all openings, such as suction, discharge, and primer, with duct tape.
- Loosen tension from any belts.
- Protect the pump by covering with a waterproof tarp.

(6) Turbine pump maintenance

The following instructions may also apply to submersible pumps. Periodically inspect discharge piping in the area near the pump to ensure it is securely supported. Ensure the pump is firmly bolted to the base (fig. 8–101).

For turbine pumps installed over a well that are experienced water supply problems, measure the static level and drawdown in the well. A deeper pump setting could resolve the problem.

Maintenance tasks:

At season startup:

Inspect the pump upper bearings and replace the oil in the oil bath or reservoir. Using approved turbine oil, cover the bearings by filling bearing reservoir almost to the top of the sight glass, being careful that excess oil doesn't get on or in the motor.

Periodically:

- Referring to instructions given in the electric motor bearing section, grease lower bearings.
- For water-lubricated turbine pumps, keep the packing in good condition, as directed for centrifugal pump packing.

Annually

Following motor manufacturer's recommendations, replace the bearing oil in vertical hollow shaft motors. Bearing oil should be maintained at the proper level throughout the season. As the motor heats up during operation, overfilling the oil reservoir may result in an oil spill. The motor's ability to dispel heat will be reduced as dirt and debris collect by adhering to the spilt oil on the motor and ventilation screens.

Figure 8–101 Oil-lubricated deep-well turbine pump near Flowell, UT

(i) Short-coupled turbine pump

Maintenance tasks

Season startup (oil-lubricated pumps):

- One hour before starting the pump, top off the oil reservoir and start the oil flowing to the pump. Make sure that the oil tube is filled before starting the pump. The pump needs about 10 drops per minute.

Season startup (water-lubricated turbine pumps):

- Using a light oil, prelubricate line shaft bearings.

Periodically:

- As instructed for the packing on a centrifugal pump, fine-tune and maintain the packing on water-lubricated, short-coupled turbines.

Annually or according to manufacturer's recommended interval:

Adjust the head shaft nut on short-coupled (one-piece shaft for shallow pumping lift) turbine pumps. The process is described below, but the procedure should only be performed by qualified personnel:

- Using proper lock-out/tag-out procedures, shut off electrical power before working on pump.
- Loosen and set aside the top motor cover and remove the set screw.
- Take out, clean, oil, and reinstall the key stock.
- Release the head shaft adjusting nut so the shaft and impellers are resting on the bowl housing (metal to metal contact, turn the head shaft adjusting nut two turns to raise the shaft and pump impellers, allowing for appropriate clearance within the bowl assembly. Precise clearance can be calculated using thread pitch and number of turns.). Larger shafts normally have left-hand threads, and pitch of threads may vary with shaft diameter.
- The shaft should turn by hand once it is raised. If it will not, tighten up the head shaft adjusting nut one-half turn and test it again.
- Continue adjusting the nut in half-turn increments, checking after each adjustment until the shaft turns freely.
- Return and tighten the set screw and motor cover.

Attention: Pull the pump, disassemble, and inspect for damage or debris if the shaft has been raised by five turns or more of the nut, and the shaft is still not turnable by hand. Consult pump dealer proper application of this procedure.

(ii) Deep-well turbine pump

Deep-well turbines shaft adjustment needs to be more precise because of shaft stretch. A qualified pump dealer or manufacturer's instructions need to be consulted when making adjustments.

Maintenance tasks:

Season startup (oil-lubricated pumps):

- Begin lubrication of the shaft up to a week before starting the pump (fig. 8–102). The line shaft and column should be full of oil and oil starting to run out at the top near the stretch assembly. Look at the manufacturer's instructions to ensure requirements are met. While filling, let four to five drops of oil per minute flow down the tube. After starting the pump, increase oil drip to 10 to 15 drops of oil per minute. Oil will dribble slower at night, when temperatures lower. Oil viscosity rating should be 9 or 10.

Periodically:

- If the deep-well turbine is water-lubricated, fine-tune and maintain the packing following the same measures as used for a centrifugal pump.

(7) Submersible pumps

A submersible pump is a submersible electric motor that is close-coupled to a turbine pump. The pump is positioned above the motor and water goes into the pump through a screen situated between the pump and motor (fig. 8–103). Because pump and motor are both suspended in the water, the cooling and lubrication required for a deep-well turbine pump drive shaft and bearings are eliminated.

Submersible pumps make use of enclosed impellers and motors that are smaller in diameter and longer than turbine pump motors. The riser pipe must be long enough to keep the bowl assembly and motor fully submerged at all times, and the well casing must be big enough for water to effortlessly flow past the motor. Insufficient circulation of water past the motor increases its potential to overheat and burnout. Electrical wiring needs sealed connections and must be watertight from the pump to the surface.

(8) Propeller pumps

Propeller pumps need a proper foundation of solid construction, preferably concrete. If concrete is not practical, a passable alternative is to use beams or timbers. When using beams, the beams should be sufficiently heavy to avoid spring action between spans; also, side motion should be restricted with lateral

Figure 8–102 Sight-feed lubricator near Stuttgart, AR

bracing. When designing the foundation, the entire weight of the pump full of liquid and the driver must be considered. The foundation should also be designed to withstand and stop excessive vibration. Pump foundation or mounting structure requirements are not addressed in this chapter. Inspect the pump and foundation for unusual vibration, noise, or visual misalignment of components at the start and end of the season and regularly during operation (fig. 8–104).

Operation at or near shutoff heads:

Operating of propeller/mixed-flow pumps at or near shutoff or static-flow heads is generally not recommended. Operation should be restricted to the maximum head presented on pump curve or field curve. The maximum head working condition should include these considerations:

- There must be sufficient thrust bearing capacity.
- Much of the power under prolonged operation at no flow or restricted delivery is converted to heat in the available fluid; in such conditions, the problem of heat dissipation may become acute.
- Propeller and mixed flow impellers at reduced flows have critical horsepower characteristics. Driver overload will most likely occur at shut off power requirements.
- Fluid temperatures, if raised excessively due to lack of flow, may impair lubrication efficiency and open line shaft units depend upon pump fluid for lubrication.

Consider the full operation range in selection of the original pump and driver. If a change in conditions occurs, contact a factory representative for recommendations.

(c) Pump plant performance tracking

Track pump flow rate, discharge pressure, energy use and energy cost to observe pumping plant performance. If these factors change considerably over a period of time, investigate to see if there is a pumping plant performance problem. If observed data changes suddenly, a severe problem or acute issue is indicated. To avoid expensive repairs, replacement, or downtime, a quick response is required. A slow change in the data often points to a maintenance need. This might also be a sign of equipment wear or issues with a pump intake.

(i) Pumping plant evaluation

Fluctuations with high energy cost spikes can make pumping plant evaluations very important to farmers. By improving pumping plant efficiency, many farmers can reduce their annual energy costs by 15 to 30 percent. If pumping plant performance monitoring indi-

Figure 8–103 Submersible pump inlet screen

Figure 8–104 Propeller pump with unstable foundation near St. Martin, LA

cates there might be a performance problem, but the problem cause is not readily apparent through onsite visual assessment, a pumping plant performance test or evaluation may be needed. The results of the test will normally allow an irrigator to determine whether a problem exists. In addition, data from test can often help isolate the source of the problem and provide information on how to overcome, repair, or fix the problem. The pumping plant evaluation should initially be completed at the pump and engine r/min normally used by the producer. As part of the evaluation, accuracy of the operator's normal method of r/min determination is checked with an electronic tachometer. If the operator wishes to examine the effect of changing pump r/min on efficiency and pumping cost, the evaluation can be conducted again with new conditions.

(ii) Information gained from pumping plant evaluation

- Cost per hour to operate pumping plant
- Cost per acre-inch of water pumped
- Cost per acre to supply a certain gross application
- Cost per season to operate pumping plant
- Well yield or pumping plant flow rate (gal/min)
- Discharge pressure pumping plant is working against
- Static and pumping water level if water source is a well
- Energy/fuel use: units depend on energy source (kWh/h, gal/h, or MCF/h)
- Overall pumping plant efficiency (OPE)
- Pump efficiency (%) on electric pumping plants
- Potential energy cost savings per season if pumping plant efficiency was brought up to standard (field attainable) efficiency
- Input horsepower into pumping plant
- Output horsepower (a.k.a., water horsepower (whp)) developed by pumping plant
- Whether the electric motor on electric powered pumping plant is over or underloaded
- Additional information on internal combustion engine powered pumping plants when a torque cell is used:
  - engine efficiency
  - pump efficiency
  - engine output horsepower
  - pump input horsepower

More information about pump testing can be found in appendix 8A.

623.0814 References

Amarillo Gear Company. 2005. Operating and maintenance instructions for models 1800–2600. Amarillo, TX.

American National Standards Institute Hydraulic Institute. 1998. Pump intake design. New York, NY.

Armour, J.C., and J.N. Cannon. 1968. Fluid flow through woven screens. American Institute of Chemical Engineers Journal. New York, NY. pp. 14:415.

Brater E.F., H.W. King, J.E. Lindell, and C.Y. Wei. 1996. Handbook of hydraulics. 6th edition. McGraw-Hill, New York, NY.

Evans, Joe, Ph.D. 2008. Parallel pumping (part two) other considerations. Hydromatic Engineered Waste Water Systems, a division of Pentair Water. Ashland, OH.

Gates Corporation. 2008. Belt drive preventative maintenance and safety manual. Denver, CO.

Gates Corporation. 2013. Belt drive preventive maintenance and safety manual. Denver, CO.

Irrigation Association. 2000. Understanding pumps, controls, and wells. Falls Church, VA.

Mefford, Brent, P.E. 2012. Pocket guide to screening small water diversions—A guide for planning and selection of fish screens for small diversions. U.S. Forest Service. Washington, D.C.

Nation Center for Appropriate Technology. 2006. The New Mexico irrigator's pocket guide. Butte, MT.

Rushing, A.S., J.D. Kneifel, and B.C. Lippiatt. 2011. Energy price indices and discount factors for life-cycle cost analysis. Annual supplement to NIST Handbook 135 and NBS special publication 709. U.S. Department of Commerce, Technology Administration, National Institute of Standards and Technology, Applied Economics Office Engineering Laboratory. Gaithersburg, MD

Smith, P. L., Jr. and M. Van Winkle: "Discharge Coefficients through Perforated Plates at Reynolds Numbers of 400 to 3000." AIChE J. 4(3):266 (1958)

U.S. Army Corps of Engineers. 1995. Engineer manual 1110–2–3102. General principles of pumping station design and layout. Washington, DC

U.S. Department of Agriculture, Soil Conservation Service. 1959. Title 210, National Engineering Handbook, Section 15, Chapter 8, Cost of pumping. Washington, DC.

Wade and Borman. 2003. Economic considerations for Florida citrus irrigation systems. University of Florida, IFAS.

Appendix A

(a) Recommendations and Considerations for Personnel Conducting Pumping Plant Tests

(1) General

(i) Ensure operators understand what test procedures and measurements will be made before initiating the test. Ensure the operator is comfortable with these procedures and measurements.

(ii) Request that the operator be present during test. Operators know their equipment and will be aware of any tricks to starting and adjusting their pumping plant. Their presence will also ensure involvement and buy-in from them. If operators aren't present during the test, and results indicate a need for adjustment or change, they may be skeptical of results and want to rerun the test when they are present. If operators are present during the initial test, they will likely be more comfortable with results and will have their questions answered during the test.

(iii) Watch for safety issues. Use personal protection equipment, such as safety glasses, mud boots, gloves that provide dexterity, cold and wet weather gear as appropriate, and especially ear plugs. Beware of loose clothing around drive shafts and other moving parts. Check for electrical safety and fuel leaks before the test. Speak up if you see other test participants engaging in risky behavior. Do everything possible to protect yourself, your partners, and any test observers that might be on site.

(iv) Find out all you can about the pump, column pipe, and pump settings before the evaluation and check for possibility of using draw down gage. Get copies of original pump curves if possible. This will help in troubleshooting system issues.

(v) On surface systems, watch outlet valve position and gated or polypipe layouts to be sure you recognize furrow flow direction. This information will be important in planning flow meter location and plumbing needs. This bit of information is not always readily apparent on flat slope fields (can't always tell high side of field by looking).

(2) An evaluation team leader should be assigned to help ensure safety procedures are followed and to help secure high-quality data. Be sure the following things get done (check and double-check each item):

(i) Conduct an initial site assessment before evaluation personnel scatter and go into action: How will the test be conducted? Are there any anticipated potential safety or measurement issues. On arrival on site, observe and record how pipeline valves and outlets are arranged and set.

(ii) Observe and document initial engine and pump setting. Check engine rpm when arriving on site. Conduct the initial evaluation at the operator's existing operating conditions.

(iii) Document field observations and information gathered:

- information provided by farmer, pump installer, or well driller about well, pump setting, static water, and estimated pumping depth
- sizes of pump discharge pipe, existing underground pipe, and outlet valves
- information from engine, pump, gear drive, or motor nameplates

(iv) Confirm with partners that an outlet valve with sufficient capacity for estimated flow is open before engaging pump.

(v) Final site inspection after evaluation.

- Walk around site and pick up tools left out.
- Ensure operators water flow control valves, safety covers, etc. are reinstalled and set as found or as instructed by operator.

(vi) Watch for cooling coils (lack of radiator). If water cooled, do not allow engine to run without pumping water for any longer than it takes to get started and pumping. Do not touch the cooling coil or lean on it, one can be burned.

(vii) Watch for safety issues. Note and call attention to safety issues and possible problems with electric safety or driveshaft.

(viii) Make a list documenting things learned through experience (mistakes). This documen- tation will help others who might read it avoid making similar mistakes.

(ix) Do not shut down pumping plant or engine before all needed data has been acquired. Do calculations on site, before leaving the field, so things missed can be spotted and get the information or measurement while on site rather than having to return later.

(x) When using PVC hydrants, if a pipeline extension is installed in the hydrant outlet for use with a flow meter, do not screw the alfalfa valve lid open too far with the hydrant. The lid will come off and obstruct water flow discharging from hydrant during the evaluation.

(xi) Make sure the water discharge valve is open before engaging the pump.

(xii) Coordinate and develop a failsafe system with all onsite participants to verify which valves are open and which are closed to ensure there is an open valve, that water is not being lost from an unobserved open valve somewhere, and that flow measurement does not include water from a secondary unintended source (such as a second well). Check and recheck.

(xiii) Watch and observe how operators normally operate their underground pipeline. Exceeding five feet per second in pipeline can result in damage to pipelines and appurtenances. Close and open valves slowly if this situation is encounter or allow the operator to operate the valves.

(xiv) Do not forget to measure discharge pressure and note any elevation difference between the point of measuring discharge pressure and the point where pumping water level is measured. This will ensure the accuracy of the TDH computation.

(xv) Cap on top of right-angle gear drive should normally be left only hand tight. This is so the operator can easily access the pump shaft to check engine and pump rpm with a tachometer.

(xvi) Do not be in too big a hurry. Take time, especially if extra people are available.

(xvii) Remember, 5 to 10 minutes of warm up is needed before loading cold diesel.

(xviii) Start the flow slow. Remember, surge and water hammer are bad.

(xix) Record the information program and training. Share information learned and experiences with people in other areas who are conducting pumping plant evaluations.

(b) Safety issues

(i) Noise—Wear hearing protection when evaluating plants powered by internal combustion engines.

(ii) Moving parts—Do not wear loose-fitting clothing and always be aware of the presence of uncovered drive shafts, pulleys, and belt drives.

(iii) Heat—Many surfaces will be hot around a pumping plant. Be aware of surroundings. Some internal combustion engine exhaust pipes are located such that it is easy to accidently encounter heat coming out of the exhaust.

(iv) Oil and water slick surfaces

- It is often wet and slick from spilled fuel or lubricants around a pumping plant.
- This is especially critical if working around a plant that has an exposed drive shaft.

(v) Danger of overloaded pumping plant components—If a major irrigation application system change is made without assessing existing pumping plant capability, operators may operate plant components (i.e., engines, drive shafts, gear drives) outside their specifications in efforts to achieve expected performance from new application systems. This can cause catastrophic component failure. If this occurs, it is best not to be in the area. So when gathering information around pumping plants, collect the data needed and get away from the plant. For safety, always minimize time spent around the plant.

(vi) Fuel leaks—Natural gas lines and natural gas meters have been found in the field with significant leaks, which could have caused explosions.

(vii) Electrical shock on electric pumping plants—Don't touch electric motors or control panels without testing them with a volt meter first.

(viii) Watch for chemical injectors around a pumping plant. Verify with operators that the

evaluation team will not be exposed to hazardous chemicals around the pumping plant or during flow measurement. Don't let the ladder walk out from under you if measuring flow rate and pressure on a pivot sprinkler lateral.

(c) How to conduct a pumping plant evaluation

(1) Gather preliminary data

Prior to conducting a pumping plant evaluation, the operator is asked for preliminary data and information about the existing pumping plant. The operator will provide energy cost per unit of fuel per energy unit (i.e., $/gal of diesel, $/MCF of natural gas, or $/KWH). Information obtained can enhance accuracy results. Information requested should include annual or seasonal pumping hours; pump type, brand, model, size, impellor type and trim, and number of stages; a copy of a pump curve; well bore diameter; column pipe diameter, material, and length; pump inlet length, location, and type (i.e., slotted, perforated, or screened pipe); development procedure used when well was drilled; and whether well was gravel packed or not. Was the well sealed by the driller or pump installer in a way that would prevent the use of a draw down gage? It is very rare that all this information is available or can be obtained. Whatever information can be obtained may prove valuable when interpreting evaluation results and troubleshooting pumping plant problems.

If time allows, visit the pumping plant before the scheduled evaluation date. Look over the layout. Anticipate equipment and plumbing needs, and any special procedures may have to employ to obtain data. Check to see if an access port is present to allow use of a drawdown gage. Record the gear ratio on right-angle gear drives (if present). The ratio is usually on the plate and is provided as the ratio of driver to driven. If the plant uses an electric motor record motor horsepower, rpm, service factor, and power factor from the name plate. Be careful to read from 60 hertz section of the plate if you are in the United States. Many newer motors have 50 hertz information also included on the plate in case the motor is shipped to other countries. Record horsepower rating and any additional information from the engine nameplate and gear drive plates as well. This information can be used later to check for over or loaded components.

(2) Gather field data

Potentially hazardous situations will be encountered while conducting irrigation pumping plant evaluations. It is important that personnel be able to recognize hazards and know how to respond and take precautions to protect themselves and their coworkers on site. They must also be prepared to recognize and report hazardous system problems discovered during evaluations to operators. Safety training should be provided to all participants who will be on site during a field pumping plant evaluation.

(i) Flow measurement—During original site assessment a suitable location for measuring flow using existing facilities or for installing a flow meter should be determined. Inline or online flow meters should be installed at locations that provide adequate distance upstream and downstream of elbows, bends, or obstructions. The meter should be in a location that will ensure all pumping plant flow is being measured. If multiple pumping plants are normally used to supply the same pipe network, make sure only one pumping plant will be measured at a time. The discharge pressure at each pumping plant should be measured before the test. If needed, valves can then be used (be very careful) to put back pressure as needed until the particular pumping plant being tested is operating with the same discharge pressure as it was when working with the other pumping plants on the network. Depending on the meter type being used, particular precautions need to be taken to ensure readings are as accurate as possible. Consult the U.S. Department of Interior, U.S. Bureau of Reclamation Water Measurement Manual for particulars associated with each meter type.

(ii) Fuel and energy measurement—During the pumping plant evaluation, it will be necessary to measure energy or fuel use rate for the pumping plant being tested. This can be done in a number of ways depending on the fuel or energy type.

(3) Electricity

Method 1: Use available onsite electric meters

Reading Watt-h neters that have rotating marked metal disk (fig. 8A–1).

- Time disk revolutions (typically time 10 revolutions)
- Record K_h multiplier, which should be on face of meter.
- Contact electrical supplier for additional multipliers that might apply
  - CTR – current transformer ratio – (i.e., 200:5 (40))
  - PTR – potential transformer ratio – (i.e., 4:1 (4))
  - Single combined multiplier
- Use equation 8A–1 to calculate kilowatt hour per hour.

$$\text{kWh/hr} = \frac{3.6\left(K_h\ \text{Factor}\right)\left(\text{No. of disk revolutions}\right)\left(\text{applicable multiplier(s)}\right)}{\left(\text{Time in seconds}\right)} \quad \text{(eq. 8A–1)}$$

$$\text{Energy cost/h} = \left(\text{cost/unit of fuel or energy}\right)\left(\text{fuel or energy use, units/h}\right) \quad \text{(eq. 8A–2)}$$

$$\text{ihp} = \left(\text{Energy consumption rate, energy units/h}\right)\left(\frac{\text{hp-hr}}{\left(\text{energy unit}\right)}\right) \quad \text{(eq. 8A–3)}$$

where:
ihp = input horsepower
Values for hp-hr/energy unit may be found in table 8A–1

Many pumping plants now are served by digital electric meters (fig. 8A–2). The new meters available from a number of sources have multiple programming options. Energy suppliers should be consulted to establish or verify procedures for use with onsite meters used by a particular supplier. Many of these meters have the ability to transmit meter readings direct to the utility company or a remote reader. All digital meters encountered during pumping plant testing in 2009 were equipped with one of several versions of visual flashing bar indicators. After contact with electric suppliers to obtain instructions, you can normally establish procedures for timing flashing indicator bar changes, which would equate to disk rotation on old style meters. Equation 8A–2 would then be used to

Figure 8A–1 Front of electric meter showing K_h factor

Example 8A–1—Calculating hourly fuel cost

Given:
An operator pays $0.08/kWh and uses 50 kWh/hr.

Find:
Hourly energy cost

Solution:
Using equation 8A–2

$$\text{Energy cost/hr} = \frac{0.08}{\text{kWh}} \times 50\ \text{kWh/h} \times 1\ \text{h} = \$4/\text{h}$$

calculate kWh/hr and equation 8A–3 to calculate ihp. See example 8A–1.

Method 2: To determine ihp—Use of clamp-on volt/amp meters

Note: This method should only be used by trained and qualified individuals with required specialized safety equipment.

Clamp on volt/amp meters can be used to determine ihp to electric powered pumping plants. Use of these meters involves opening the pumping plant control panel and exposing conductors while the plant is in operation. On a single-phase system, a clamping volt/amp meter can be used to clamp around a conductor, and volts and amps measured. On a three-phase system, the clamp-on volt/amp meter would be used on each of the three conductors to measure voltage and current for each leg of the three-phase system (fig. 8A–3). These values should be very similar if the legs are in balance. If they are not, it indicates a potential motor or power supply problem. On a three-phase circuit, each leg is measured and the average of the three legs' volt and amperage measurements are used to calculate kVA. Local power suppliers and utility companies might sometimes participate in and assist in obtaining these reading.

Figure 8A–2 Programmable electric meter red oval surrounds area with flashing indicators.

$$kVA = \frac{(V \times A)}{1{,}000} \qquad \text{(eq. 8A–4)}$$

For a single phase system:

$$kWh/h = kW = kVA \times PF \qquad \text{(eq. 8A–5)}$$

where:
PF = power factor of the power supply

$$\frac{kWh/h}{h} = kW = \frac{V \times A \times PF}{1{,}000} \qquad \text{(eq. 8A–6)}$$

Then use equation 8A–3 to calculate ihp:

For a three phase system:

$$\frac{kWh/h}{h} = kW = \frac{V \times A \times PF \times 1.73}{1{,}000} \qquad \text{(eq. 8–7)}$$

where:
$1.73 = \sqrt{3}$ and using equation 8A–3:

$$ihp = kWh/h \times 1.34 hp/kW$$

(4) Natural gas

Most natural gas meters found on individual pumping plants are mechanical meters that operate with various types of meter index. The index includes the face and dials that numerically or digitally represent cumulative natural gas volume that has flowed through the meter. Most natural gas meters whether mechanical dial or digital will include one or two test dials. These test dials are labeled with the number of cubic feet of gas flowing through the meter per revolution of the dial. By timing the test dial during a pumping plant evaluation, the gas usage rate can be determined. Note that natural gas is compressible, so it is necessary to check with the gas supplier to determine how a particular company handles pressure and temperature correction in their metering. A natural gas meter will read accurately at its calibration pressure and temperature. Pressure is normally the more significant com-

Figure 8A–3 Measuring voltage for each leg of three-phase power

ponent of meter reading correction. The gas supplier will be monitoring and maintaining gas line pressure and temperature in the delivery line upstream of the billing meter. If the gas meter is located very close to the pumping plant engine, the supplier may install a pressure regulator on the intake side of the meter to maintain the calibration pressure. For a number of reasons, the gas supplier might maintain pressure higher than calibration pressure at the meter (i.e., meter is a significant distance away from the plant, or multiple plants are served by the meter). If greater than calibration pressure is maintained, a pressure correction factor addressing gage pressure at the meter, calibration pressure, and atmospheric pressure must be applied to readings.

$$\text{Pressure correction factor} = \frac{\text{gage } (\text{lb/in}^2) + \text{atmos. pressure } (\text{lb/in}^2)}{\text{calibration press.} (\text{lb/in}^2) + \text{atmos. press} (\text{lb/in}^2)} \quad \text{(eq. 8A–8)}$$

To read the meter during a pumping plant evaluation, time revolutions of test dial. This dial will represent a smaller volume per revolution compared to other dials. It may be labeled 10, 5, and 2 cubic feet per revolution.

$$\text{Fuel consumption ft}^3\text{/h} = \frac{(\text{ft}^3 \text{ used})(\text{meter constant})}{\text{Time (minutes)}} \quad \text{(eq. 8A–9)}$$

Natural gas is often billed per 1,000 cubic feet (M = 1,000) of natural gas (one million cubic feet is denoted as MMcf).

$$1 \text{ Mcf} = 1{,}000 \text{ ft}^3 \quad \text{(eq. 8A–10)}$$

$$\text{Energy cost per hr} = \left(\frac{\$ \text{ cost}}{\text{unit of fuel}}\right) \times \left(\frac{\text{fuel consumed}}{\text{hr}}\right) \quad \text{(eq. 8A–11)}$$

See example 8–2 for fuel cost calculations for a natural gas pumping plant. The fuel ihp of a natural gas engine can be calculated using equations 8A–12 or 8A–13:

$$\text{ihp} = \left(392.93 \frac{\text{hp-hr}}{\text{Mcf}}\right)\left(\text{Fuel consumption } \frac{\text{Mcf}}{\text{hr}}\right) \quad \text{(eq. 8A–12)}$$

Where the 392.93 conversion factor assumes 1,000 Btu per cubic feet of natural gas. See example 8A–3.

Example 8A–2—Fuel cost for natural gas pumping plant

Given:
A pumping plant uses 1,600 ft^3/h, fuel cost is \$4 per MCF

Find:
The hourly fuel cost for a natural gas pumping plant

Solution:

$$\text{Fuel consumption } \left(\frac{1{,}600 \text{ ft}^3}{\text{h}}\right) = \text{Fuel consumption } \left(\frac{1{,}600 \text{ ft}^3}{\text{h}}\right)\left(\frac{1 \text{ Mcf}}{1{,}000 \text{ ft}^3}\right)$$

$$= 1.6 \text{ Mcf/h}$$

$$\text{Energy cost per hour} = \left(\frac{\$4.00}{\text{Mcf}}\right) \times \left(\frac{1.6 \text{ Mcf}}{\text{h}}\right)$$

$$= \$6.40/\text{h}$$

Natural gas Btu levels will generally range between 900 and 1,150 Btu per cubic feet. If the natural gas supplier indicates an actual Btu level other than 1,000 Btu per cubic feet, the 392.93 factor must be adjusted, as shown in equation 8A–13:

$$\text{ihp} = \left(392.93\ \frac{(\text{hp-hr})}{\text{Mcf}}\right)\left(\frac{(\text{energy content of natural gas BTU/ft}^3)}{1{,}000\ \text{BTU/ft}^3}\right)(\text{Fuel consumption, Mcf/hr})$$

(eq. 8A–13)

Some suppliers charge producers by the dekatherm (Dth). This basically is a fee structure that focuses on the energy level of the natural gas rather than the volume. At 1,000 Btu per cubic feet of natural gas, there is 1 dekatherm of energy in 1 Mcf of gas, so the cost per Dth equals cost per Mcf. If a supplier charges based on the dekatherm, the energy level of the gas provided should be in Btu per cubic feet.

$$1\ \text{dekatherm} = 1{,}000{,}000\ \text{BTU}$$

(eq. 8A–14)

Equation 8A–14 is an energy conversion and holds true regardless of the energy content of the gas.

When the energy content of the gas is equal to 1,000 Btu per cubic feet, the following relationships are true:

$$\frac{\text{one dekatherm}}{\text{Mcf}} = \left(\frac{1{,}000{,}000\ \text{BTU}}{1{,}000\ \text{ft}^3}\right) = 1{,}000\ \text{BTU/ft}^3$$

(eq. 8A–15)

$$\frac{\text{Energy cost}}{\text{hr}} = \left(\frac{\$}{\text{decatherm}}\right)\left(\frac{\text{decatherm}}{\text{Mcf}}\right)\left(\frac{\text{Mcf}}{\text{hr of gas usage}}\right)$$

(eq. 8A–16)

(5) Liquid petroleum gas

Liquid petroleum (LP) gas can be measured during a pumping plant evaluation by using a temporary fuel storage tank or container that allows before and after weight measurement of the container. LP gas weighs 4.24 pounds per gallon. If during a pumping plant evaluation, 10 pounds of LP gas were burned during a 30-minute test period, the plant is using:

$$\left(\frac{10\ \text{lb}}{30\ \text{min}}\right)\left(\frac{1\ \text{gal}}{4.24\ \text{lb}}\right)\left(\frac{60\ \text{min}}{1\ \text{hr}}\right) = 4.72\ \text{gal/h LP gas}$$

(6) Gasoline

Gasoline can be measured during a pumping plant evaluation by setting up a temporary fuel storage tank or container that allows before and after volumetric or weight measurements. Regular gasoline weighs about 6.15 pounds per gallon. If during a pumping plant

Example 8A–3—Calculating input horsepower for natural gas pumping plant

Given:
The actual energy content of the fuel is 950 Btu/ft^3, and the hourly fuel consumption is using 1.6 Mcf/h.

Find:
The input horsepower.

Solution:
Using equation 8A–13.

$$\text{ihp} = \left(392.93\ \frac{(\text{hp-hr})}{\text{Mcf}}\right)\left(\frac{950\ \text{BTU/ft}^3}{1{,}000\ \text{BTU/ft}^3}\right)(1.6\ \text{Mcf/hr})$$

$$= 596.2$$

Example 8A–4—Determine energy cost and input horsepower using dekatherms

Given:
The energy level of the gas supplied is 1,050 Btu/ft^3, the pumping plant is using 1.6 Mcf/h, and the operator was being billed $4.20/Dth.

Find:
The energy cost per hour and the input horsepower.

Solution:
From equation 8A–15, it can be seen that when the energy content of the gas is 1,000 Btu/ft^3, the ratio ((1 Dth/Mcf)/(1,000 Btu/ft^3)) equals 1. Multiplying this ratio by the Btu content per cubic feet will yield the energy level of the gas in dekatherms per Mcf:

$$\left(\frac{1{,}050\ \text{BTU}}{\text{ft}^3\ \text{gas}}\right) = \left(\frac{1{,}050\ \text{BTU}}{\text{ft}^3\ \text{gas}}\right)\left(\frac{1\ \text{decatherm/Mcf}}{1{,}000\ \text{BTU/ft}^3}\right)$$

$$= 1.05\ \frac{\text{decatherms}}{\text{Mcf gas}}$$

Next, calculate the hourly cost using equation 8A–12 and the calculated energy level of the gas.

$$\left(\frac{1{,}050\ \text{BTU}}{\text{ft}^3\ \text{gas}}\right) = \left(\frac{1{,}050\ \text{BTU}}{\text{ft}^3\ \text{gas}}\right)\left(\frac{1\ \text{decatherm/Mcf}}{1{,}000\ \text{BTU/ft}^3}\right)$$

$$= 1.05\ \frac{\text{decatherms}}{\text{Mcf gas}}$$

Using equation 8A–13, the input horsepower for a 1,050 Btu/ft^3 gas consumed at the rate of 1.6 Mcf/h would be:

$$\text{ihp} = \left(392.93\ \frac{\text{hp-hr}}{\text{Mcf}}\right)\left(\frac{1{,}050\ \text{BTU/ft}^3}{1{,}000\ \text{BTU/ft}^3}\right)(1.6\ \text{Mcf/hr})$$

$$= 660.1\ \text{hp}$$

evaluation, 18 pounds of gasoline were used during a 30-minute test period, the plant is using:

$$\left(\frac{18\text{ lb}}{30\text{ min}}\right)\left(\frac{1\text{ gal gasoline}}{6.15\text{ lb}}\right)\left(\frac{60\text{ min}}{1\text{ h}}\right) = 5.85\text{ gal/h LP gas}$$

If a portable inline fuel meter is to be installed specifically for the test, the pumping plant will need to be shut down before the test to allow meter installation upstream of the engine fuel intake. Meters need to be calibrated.

Calculations involving the volumetric cost of fuel or energy content per gallon should consider volumetric changes of the fuel due to temperature changes. The reference temperature for the sale of petroleum products in the United States is 60 °F (15.556 °C). The widely accepted coefficient of expansion for gasoline is 0.00069 per degrees Fahrenheit. If the volume of 1 gallon of gasoline measured at 60 °F is 231 cubic inches, that same gasoline would occupy 234.2 cubic inches if measured at 80 °F, a difference of approximately 1.4 percent.

(7) Diesel

Diesel fuel can be measured during a pumping plant evaluation by setting up a temporary fuel storage tank or container that allows before and after volumetric or weight measurements. No. 2 diesel weighs about 7.15 pounds per U.S. gallon. If during a pumping plant evaluation, 18 pounds of diesel were used during a 30-minute test period, the plant is using:

$$\left(\frac{18\text{ lb}}{30\text{ min}}\right)\left(\frac{1\text{ gal of diesel}}{7.15\text{ lb}}\right)\left(\frac{60\text{ min}}{1\text{ h}}\right) = 5.03\text{ gal/h diesel gas}$$

Great care must be taken during set up, fuel measurement, and returning the system to pre-evaluation operation to minimize air entry to the fuel system. It is critical to ensure the engine fuel system is free of air and operating in its pretest conditions before leaving the site.

A properly calibrated meter can be used for measuring fuel consumption. Note that special care is needed if using a diesel fuel meter. Diesel fuel flows through and by the engine injectors to help with cooling. On some diesel engines, fuel that flows past the injectors may be routed all the way back to the fuel storage tank; on other models, it is looped back to the intake side of the engine. Ensure that fuel routed back to the tank is not included in the calculated consumed fuel volume. Great care must be taken if using a diesel fuel meter to minimize air entry to the fuel system. A portable fuel pump may help in removing air from the system after meter installation and after the test, when the meter is removed and the system returned to original pretest conditions. After using a fuel meter, ensure the engine fuel system is free of air and operating in its pretest conditions before leaving the site.

As with gasoline, calculations involving the cost per gallon of fuel or energy content per gallon should consider volumetric changes of the fuel due to temperature changes. The coefficient of thermal expansion for diesel fuel is 0.00050 per degrees Fahrenheit, and the reference temperature for the sale of diesel is 60 degrees Fahrenheit (15.556 °C). If the volume of 1 gallon of diesel measured at 60 degrees Fahrenheit is 231 cubic inches, that same diesel fuel would occupy 233.1 cubic inches if measured at 80 degrees Fahrenheit, a difference of approximately 1.0 percent.

(a) Measurement of pumping water level or relative elevation

Water depth in the well is measured with a well sounder, drawdown gage, or airline. To make this measurement, the conducting tip on the well sounder cable is lowered through an access port in the well head between the well casing and column pipe. When the tip encounters water, a battery-charged electric circuit is completed, moving an indicator needle, turning on an indicator light, and/or setting off an audible alarm sound. The sounder cable is marked in 5- or 10-foot increments. The amount of measured cable in the hole when the sounder tip encounters water gives the pumping depth below the pump head. Relative elevation of the water surface when pumping from a pond or sump to the elevation of the location pumping plant discharge pressure is measured can be determined with surveying equipment.

When testing a deep well turbine, evaluators know the setting depth of the pump in the well before a drawdown gage is used. If the pumping plant has been shut down for several days, the static water level should be measured using a well sounder, drawdown gage, or airline. If a portable drawdown gage is used to measure

static water level, it should be removed from the well prior to startup.

The pumping plant should be started and the pump and engine speed adjusted to match normal operating speed. Discharge pressure is measured with a pressure gage mounted on the discharge pipe of the pumping plant. Many systems have a faucet installed on the pumping plant discharge pipe, making it easy to use an adapter to attach a pressure gage during evaluation. If an open stand is present at the pumping plant discharge, relative elevation of the water level in the stand above the drawdown gage measurement location can be used to determine discharge pressure. The draw down gauge and flow measurement device should be used monitoring pumping water depth and flow rate. After pumping plant flow rate, drawdown depth, and discharge pressure stabilize, energy consumption rate is measured as described based on timed fuel or energy use.

Friction in the column and any discharge pipe between the pump inlet and the point where discharge pressure is measured including minor losses can be calculated or determined from tables based on column pipe size, material, and pump flow rate. The total dynamic head (TDH) the pump is working against is next calculated using procedures in NEH623.0802.

With TDH and pumping plant flow rate, water horsepower (whp, also called output horsepower) can be calculated using equation 8–3. Ihp to the pumping plant is calculated based on rate of energy consumption and energy to horsepower energy equivalent (table 8A–1) using equation 8A–3.

The overall pumping plant efficiency is calculated using equation 8–17:

Standard overall efficiency (SOE) can be determined by multiplying the potential efficiencies of each applicable pumping plant component as shown in equation 8A–17. Table 8A–2 can be used to estimate component efficiencies.

$$\text{SOE} = \left(\left(\text{Potential component Eff}\right)\left(\text{Potential component Eff}\right)\ldots\right)\left(100\right) \qquad \text{(eq. 8A–17)}$$

For electric-powered plants, it might be—

$$\text{SOE}(\%) = (\text{ME})(\text{VFDE})(\text{DE})(\text{PE})(100)$$

For plants powered by internal combustion engines:

$$\text{SOE}(\%) = (\text{EE})(\text{DE})(\text{PE})(100)$$

where:
ME = motor efficiency (as decimal)
VFDE = variable-frequency drive efficiency (as decimal)
EE = engine efficiency (as decimal)
DE = drive efficiency (as decimal)
PE = pump efficiency (as decimal)

Note: Pumping plants may be encountered in the field with a combination of drives (e.g., a belt drive and a right-angle gear drive. If so, use the efficiency of each component as a multiplier in equation 8A–17. Use a value of 1 for any listed item in equation 8A–17 that is not present. Consider each component of a specific pumping plant from the power input to pumping plant output. Example 8A–5 demonstrates how this might be done. Also see example 8A–6.

Table 8A–1 Energy content of fuels, hp-h/energy unit [1]

Energy type	hp-hr/energy unit
Electric (Kwh)	1.34
Diesel (gal) [2]	54.6
Natural gas (Mcf)	404.56
Propane (gal)	35.98
Gasoline (gal) [2,3]	47.3
Ethanol (gal) [5]	31.6
Gasohol (10% ethanol, 90% gasoline) (gal)	47.2

1 Carbon management evaluation tool (COMET) values for energy
2 Petroleum fuel volumes measured at 60 °F
3 Regular unleaded gasoline
4 Conversions: 1 hp = 0.746 kW; 1 kWh = 3,412 Btu; 1 hp-h = 2,544 Btu
5 Nebraska Pumping Plant Criteria for fuels containing ethanol were estimated based on the Btu content of ethanol and the performance of gasoline engines.

Table 8A–2 Pumping plant component standard efficiency values

Component	Field attainable efficiency, %
Pump efficiency	
Centrifugal	75
Vertical turbine	75
Floating tailwater	65
Submersible	65
Drive efficiency	
Direct drive	100
Right-angle gear drive	95
Multiple V-belt	90
Flat belt	85
Power unit efficiency	
Internal combustion engine (diesel)	31.7
Internal combustion engine (gasoline)	23.6
Internal combustion engine (natural gas)	22.6
Internal combustion engine (propane)	25.6
Electrical motor, 3 phase, serving submersible pump	80.0
Electrical motor, single phase, serving submersible pump	75.0
Electrical motor, vertical hollow shaft, 10-100 hp rating	90.0
Electrical motor, vertical hollow shaft, 100-150 hp rating	91.0
Electrical motor, vertical hollow shaft, 150-300 hp rating	92.0
Electrical motor, V-belt drive, 10-40 hp rating (motor only)	88.0
Electrical motor, V-belt drive, 40-125 hp rating (motor only)	89.0
Electrical motor, V-belt drive, 125-130 hp rating (motor only)	92.0
Variable frequency drive or variable speed drive assuming 3% energy loss and 5% loss for required cooling.*	92.0

Note: Efficiency shown is drive efficiency only. Motor efficiency must be considered separately.
* ITRC Report No. R 06-004, Electric motor efficiency under variable frequencies and loads

The pumping plant evaluation should initially be completed at the pump rpm normally used by the producer. As part of the evaluation, accuracy of the operator's normal method of rpm determination is checked with an electronic tachometer. If the operator wishes to examine the effect of changing pump rpm on efficiency and pumping cost, the evaluation can be conducted again with new operating conditions.

$$Q(\text{ac-in/h}) = \frac{Q(\text{gpm})}{452.6} \qquad \text{(eq. 8A–18)}$$

The pumping plant's fuel use rate per hour was measured as described in the fuel and energy measurement section. The operator provided the fuel or energy cost per unit of fuel or energy. The fuel cost per hour obtained in equation 8A–13 is divided by flow rate in ac-in/hr from equation 8A–19 to obtain the pumping cost $/ac-in of water pumped.

$$\text{Pumping cost/ac-in} = \frac{\text{pumping cost } (\$/\text{h})}{Q \text{ ac-in/h}} \qquad \text{(eq. 8A–19)}$$

Additional computations can be based on a single irrigation event or the entire season. Using area irrigated, set times, and pumping plant flow in acre-inch per hour, gross irrigation application (in) per irrigation can be calculated. Multiplying energy fuel cost per acre inch by gross application provides cost per acre for a single irrigation. Multiplying fuel cost per acre-inch by total acres watered per application provides cost per inch of gross application on the irrigated area. The total cost per season can be calculated based on information provided by the operator on annual hours of pumping or annual gross irrigation application.

For example, a producer has a pumping plant with a current fuel cost of $2 per acre-inch. He applied 20 inches gross per year on a 120-acre irrigated field. Seasonal fuel cost is $4,800 (($2/ac-in) (120 ac) (20 in)). If a pumping plant was not serving an irrigation system or the operator had a better handle on annual hours pumping, the hourly energy cost can be multiplied by annual hours of pumping to obtain the seasonal energy cost (e.g., energy cost is $4/hour and plant operates about 1,200 hours per year: seasonal energy cost is ($4/h) (1,200 h) = $4,800).

With annual hours of operation and total irrigated area, area and time of individual irrigation sets, and number of irrigations provided by the operator, almost any way of examining pumping cost is available (cost/h, cost/ac-in, cost/ac, cost/in, cost/set, and cost/season).

Example 8A–5—Determining standard overall pumping plant efficiency

Given:
A diesel-powered internal combustion engine, with a drive shaft to a right-angle gear drive, and a vertical turbine pump.

Find:
Standard overall efficiency

Solution:
Assume 100% efficiency for the drive shaft. From table 8A–2 read the following values:

EE = .317
GE = .95
PE = .75

The SOE for this plant would be:

$$(0.317 \times 1.0 \times 0.95 \times 0.75) \times 100 = 22.59\%$$

Example 8A–6—Determining the SOE and potential fuel cost reduction for internal combustion engine

Given:
A diesel powered internal combustion engine with a drive shaft connected to a right-angle gear drive that powers a vertical turbine pump. Assuming 100% efficiency for the drive shaft.

Find:
The SOE for this plant

Solution:

$$\text{SOE} = (\text{Diesel engine eff.})(\text{drive shaft eff.})(\text{right-angle gear eff.})(\text{turbine pump eff.})$$

Expressing values from table 8A–2 as decimal percentages:

$$\begin{aligned}\text{SOE} &= (0.317)(1.0)(0.95)(0.75)(100)\\ &= 22.59\%\end{aligned}$$

Based on field measurements the pumping plant uses diesel at 5 gal/h. The operator pays \$4/gal for diesel. The hourly energy cost = \$4/gal × 5 gal/h = \$20/h.

The pumping plant evaluation provided a measured MOE of 17%.

The SOE for this installation is 22.6%.

$$\begin{aligned}\%\text{ of SOE} &= \left(\frac{\text{MOE}\%}{\text{SOE}\%}\right)\times 100\\ &= \left(\frac{17}{22.6}\right)\times 100\\ &= 75.2\%\end{aligned}$$

$$\begin{aligned}\text{Potential fuel reduction} &= (100-75.2)\\ &= 24.8\%\end{aligned}$$

$$\begin{aligned}\text{Potential hourly cost reduction} &= \left(\frac{24.8}{100}\right)\times(\text{cost/h})\\ &= 0.248\%\times\$15/\text{h}\\ &= \$3.72/\text{h}\end{aligned}$$

Potential Annual Cost Reduction = Annual hours of pumping × potential fuel reduction as decimal

If 1,280-h pumping season:

Potential Annual Cost Reduction = (\$3.72) (1,280) = \$4,762

Example 8A–7—Determining potential annual fuel cost reduction

Given:
An electric-powered pumping plant serving a 120-acre irrigation system. The pumping plant delivers 900 gpm to a center pivot. The pumping plant discharge pressure is 30 lb/in^2. The pumped water depth plus column friction loss was 130 feet. The operator applied 20 inches gross per season, and pays $0.08/kWh for his energy. The pumping plant includes a 100-hp rated electric motor (operating at about 88 hp based on electric meter KVA information, and assumed efficiency values from table 11.2 for the motor and VFD), with a 100-hp rated VFD, multi-V-belt drive, right-angle gear drive, and vertical turbine pump.

Find:
The SOE for the pumping plant and the annual potential fuel cost reduction

Solution:
From table 8A–2: ME = 89, VFDE = 92, belt drive 90, right-angle gear drive 95%, and pump efficiency of 75%.

The SOE for this plant would be $(0.89 \times 0.92 \times 0.90 \times 0.95 \times 0.75) \times 100 = 52.5\%$.

Based on field measurements the pumping plant uses electricity at 80.5 kWh/h. The operator pays $.08/kWh. The hourly energy cost = $.08/kWh x 80.5 kWh/h = $6.44/h.

Calculated OPE:

Ihp $= 80.5 \times 1.34 = 107.87$ (eq. 8A–47)

Output hp(whp) $= (30 \times 2.31 + 130) \times 900/3960 = 45.3$ hp ((eq. 8.3)

The measured OPE $(45.3/107.87 \times 100 = 41.99\%)$ 42.0% ((eq. 8A–17)

The SOE for this installation is 52.5%.

Percent of SOE = OPE%/SOE% $\times$ 100 = 42.0/52.5 $\times$ 100 = 80%

Potential Fuel Reduction (PFR) = 100% - 80% = 20 percent

Potential Cost Reduction = 20/100 x cost/hr = 0.20 x $6.44/hr = $1.29/hr

Pot Annual Cost Reduction = Annual Hours of Pumping x PFR (as decimal)

If 1,280-hour pumping season:

Potential Annual Cost Reduction = $1.29 $\times$ 1,280 = $1,651

Next, the potential cost savings are computed that would result if the measured operating efficiency (MOE) were brought up to a field-attainable standard overall efficiency (SOE). See example 8A–7.

Note: Some systems are already performing at or above standard pumping plant efficiency, in which case potential fuel reduction will be a negative value and the operator will not likely want to make changes.

Note: On electric-powered pumping plants, if the electric motor is operating at 55 to 100 percent of its rated horsepower, not making noise, and operating with the legs in balance and no problem with the electrical supply (power factor is good), the motor plate and VFD rated efficiency can be assumed to be correct. If there is any question, an electrician or possibly an electricity supplier could verify the conductor leg balance coming from the power supply and address any issues with power supply.

The actual field pump efficiency (PE) can be estimated fairly accurately by rearranging equation 8A–17 to solve for PE and substituting MOE for SOE (note in this example there were two separate DE values one for the belt drive one for the right-angle gear drive

In example 8A–8, the majority of potential improvements are likely to be associated with the pump.

Unlike electric-powered pumping plants, assumptions cannot be made about the field efficiency of engines. The pumping plant evaluation can provide information of the relative performance of the pumping plant and provide costs and potential for cost reductions. An overall pumping plant efficiency evaluation of an internal combustion engine powered plant will indicate whether there is a problem. The evaluation will not necessarily indicate the location of the problem (i.e., pump, engine, drive components, or power supply).

Equipment is available that does allow isolating problems and evaluating the engine and pump efficiencies specifically. A torque cell utilizes a strain gage installed inline with a drive shaft to measure engine output horsepower and hence the pump intake horsepower

Example 8A–8—Estimating field pump efficiency

Given:
From example 8A–A7, whp was 45.3 hp, the ihp was 107.9 hp, and the MOE was 42%:

Find:
The field pump efficiency

Solution:

$$SOE(\%) = (ME \times VFDE \times DE \times PE \ldots) \times 100 \qquad \text{(eq. 8A–17)}$$

Substituting MOE for SOE and solving for PE

$$PE(\text{as decimal}) = \frac{\left(\frac{MOE\%}{100}\right)}{(ME \times VFDE \times DEBD \times DEGD)}$$

$$= \frac{\left(\frac{42}{100}\right)}{(0.92 \times 0.89 \times 0.9 \times 0.95)}$$

$$= 0.60 \text{ or } 60\%$$

in the field (fig. 8A–4). With this information, infield pump efficiency and infield engine efficiency can be calculated.

In the absence of a torque cell, standard operating procedure is to assess and evaluate operation and maintenance (O&M), and take any aboveground and easily assessed O&M actions that might improve system performance and rerun the evaluation to check improvement. If the problem cannot be isolated, the operator may wish to locate a service provider who has the torque cell equipment to run a test. Labor costs involved in pulling a deep well vertical-turbine pump, and putting it back in the well after repairs and resetting it, can be as much or more than the cost of actually repairing a pump once it is removed from the well. Additional details will be provided in the troubleshooting section. Therefore, it is important to be sure the problem is the pump before pulling it from the well.

If an inefficient pumping plant is tested, personnel can use the troubleshooting section to provide farmers with items to check before pulling the pump, such as improper carburetor adjustment, improper timing, spark plugs needing cleaning, improper natural gas pressure at the carburetor, or improper bowel adjustment. Pumping plant evaluations are also useful in spotting oversized engines and electric motors. Oversized internal combustion engines usually operate less efficiently when underloaded. Electric energy base demand charges for electric powered pumping plants are often based on the horsepower rating of the electric motor. It can sometimes save money to switch to smaller hp rated electric motors that are fully loaded.

Figure 8A–4 Torques cell installed to measure engine output horsepower during Louisiana NRCS pumping plant evaluation

Check fuel cost and potential fuel cost reductions. Depending on energy cost fluctuations, there are times when a small efficiency improvement will result in substantial fuel or energy cost reductions. If potential fuel reductions exist, look first at routine maintenance items that the operator might have neglected or overlooked. Look first to items that can be easily accessed and accomplished or for which assistance is readily available at low cost. For example, an operator would want to look at a spark plug replacement and tune up on a natural gas engine before pulling a pump from 300 feet down a well to have it checked out.

(b) Methods for building a field pump curve

A field pump test can be conducted to develop total dynamic head, horsepower, and efficiency curves as a function of pumped flow rate. This test could be on an existing pumping plant being considered for use with an alternative application (e.g., if an existing pumping plant had been designed and installed to provide water to a high-pressure sprinkler irrigation system and the farmer would like to know how the system would perform when it was converted to a low-pressure irrigation system without any modification or upgrades). In order to specify requirements of a new irrigation system, operating characteristics of the existing pumping plant must be known (otherwise anticipated performance is a guess).

The following is an example protocol for conducting this test. The field pump test is conducted by removing a section of existing pipe from the pump discharge and inserting a test pipe section equipped with a flow meter, pressure gauge, and a valve to regulate flow and discharge pressure, or by configuring the existing discharge line from the pump with a flow meter, a pressure gauge, and butterfly squeeze down or gate valve to regulate flow. Discharge water during the test should be diverted or routed to a safe discharge location. Water discharged during the test can often be disposed of into areas growing crops, where it can be beneficially used. The size of the valve must match the size of the discharge line (fig. 8A–5). Care must be

taken when planning the test system layout to ensure no existing underground pipelines are unintentionally exposed to pressure that exceeds the pipe's rating. Chains and anchoring will likely be necessary to keep test equipment connected and in place during test.

This field test consists of three basic measurements: flow rate, total head on the pump, and energy consumed. The flow will be measured with a flow meter. The total dynamic head is the elevation difference between the point of discharge and the water level, the friction loss in the column pipe, and the discharge pressure all measured in feet. Water levels in the well can be measured with an electric sounder or airline. The pressure in the discharge line is measured using a pressure gage, then converted to feet. All manufacturer recommendations concerning the installation of the flow meter and pressure gage should be followed regarding distances from elbows bends and valves.

The input power consumed by the pump driver will be measured and recorded for each flow condition during a specified time period. If the pumping plant is powered by an electric motor and power consumption is measured with an electric meter equipped with a test dial capable of providing a measurement of kWh/h (KW) or equivalent, the meter may be used to measure input electrical power at each flow condition. If an electric meter is not present, individual pumping plant input power can be computed based on measured input voltage and amperage (this method should only be used by a qualified individual).

Figure 8A–5 Discharge pipe with flow meter and valve

If the power source is an internal combustion engine use a fuel flow meter, graduated volumetric container or container on scales to measure the weight or volumetric rate of fuel use. That rate can then be converted to ihp for each flow condition. The pumping plant should be operated continuously for at least 24 hours to ensure the drawdown is stable before the test. Actual performance with a particular pump may necessitate changing the protocol. For example, a pumping plant may not be capable of delivering the target flow rate at open discharge.

Before starting the test, static water level in the well and its elevation relative to the pump discharge pressure monitoring point are measured. The first set of measurements will be taken with the valve fully open and free discharge from the pumping plant. The pump will operate until the flow rate and drawdown level in the well have stabilized. Stabilized can be considered as less than 1 foot change in pumping water level over the time of the test. Then the rate of flow, gallon per minute, discharge head, pound per square inch, power consumption rate (kW-h/h or gal/h, or lb/h), and pumping water level (feet below ground surface at pump) are recorded for a 10-minute period.

Next, the valve will be closed until the target (desired) flow rate is achieved and discharge pressure measured and converted to feet of head. The pump will be operated in this condition until the flow rate and drawdown level in the well stabilize. The pump must be run at this discharge pressure for a measured 10-minute period and values of rate of flow, discharge head, fuel or power consumption rate, and pumping water level, feet below location where discharge pressure is measured, recorded. Total dynamic head (TDH) will be approximated as (pumping depth + (discharge pressure × 2.31 ft of head/psi)). Friction loss in the column pipe from the pump intake to the point discharge pressure can be calculated and added to the TDH value to provide a more accurate measurement.

This procedure will be repeated at a flow rate that is 60, 80, 120, and 140 percent of target, providing 5 test points. The measurements taken at these 5 points will then be used to prepare a field pump performance curve of flow rate versus TDH, output horsepower,

and overall pumping plant efficiency versus flow rate curves can also be plotted. For each new considered application, the test data can be used to assess pumping plant capability, expected performance, and potential operating cost by plotting the actual pump ihp and pump efficiency. For electric-motor-powered pumping plants equipped with right-angle gear drives, use a torque cell in the test to separate motor or engine horsepower from pump horsepower (fig. 8A–6). An alternative to a torque cell would be to estimate electric motor efficiency. An electrical motor should be very close to its rated efficiency if the motor is operating within its stated range. On three-phase motors, amperage of the three legs needs to be balanced for the motor to meet its rated efficiency.

The irrigation system curve (output flow rate versus TDH for the pumping plant) can be plotted on the field-developed pump curve. The point where the curves cross would provide the system operating point.

The testing protocol will need minor adjustment on other types of pump. Centrifugal pump should never be operated at zero head (wide open, no back pressure) nor at shutoff head for long periods of time. Either condition will cause damage to the pump or motor (if electrically powered). Many centrifugal pumps are above ground, where the name plate can be accessed. This makes it much easier to find out enough about the existing pump to avoid operating the pump outside its reasonable operating range during tests. When you have zero discharge pressure at a turbine pump outlet, the pump will still be working against a head equal to the water table depth plus friction in the column pipe. With a centrifugal pump, the discharge may actually be below the water surface elevation. To avoid problems in either of these conditions, watch pressure head signs.

Figure 8A–6 Electric motor hooked to a 90-degree angle gear drive, Vermillion Parish, LA

(c) Troubleshooting and improving pumping plant performance

Check fuel cost and potential fuel cost reductions. Some systems are already performing at or above standard pumping plant efficiency, in which case the operator will likely not want to change the system. Depending on energy cost fluctuations, there are times that a small efficiency improvement will result in substantial fuel or energy cost reductions. If potential fuel reductions exist, look first at routine maintenance items that the operator might have neglected or overlooked. Look first to items that can be easily accessed and accomplished or for which assistance is readily available at low cost. For example, an operator would want to look at a spark plug replacement and tune up on a natural gas engine before pulling a pump from 300 feet down a well to have it checked out.

(1) Problems found during past evaluations:

- Evidence of inadequate well development (suspended fine sediment in discharge water from newly drilled well)
- Pump operating point mismatched with application requirements
- Lack of flow monitoring resulting in producer overestimation of pump plant flows
- Engine-powered pumping plants often operated pumps at rpms different than designed
- Stray electricity voltage leaks found on several control panels and motors
- Many installations showed signs of iron bacteria. It is likely that a number of the pumping plants tested had screen capacity reductions due to iron bacterial slime
- Some State well-drilling requirements result in seals being placed between pump columns and well casing, making water depth in column impossible to measure. The correct amount of chlorine required to treat iron bacteria in a particular well is difficult to determine without a way to measure water volume needing treatment ((well depth-static water level) × cross-sectional area of casing)
- Water tests are often not available on pumping plants tested. Properly designed well screens typically have an entrance velocity of less than 0.1 foot per second. If calcium or magnesium carbonate or calcium or magnesium sulfate mineral encrustations are common on local well screens, the condition would be aggravated by well screen entrance velocities of greater than 0.1 foot per second. Higher screen entrance velocities accelerate mineral encrustation according to NDSU AE–97, Care and Maintenance of Irrigation Wells.
- Noted importance of developing cooperative relationships with electricity suppliers for obtaining assistance when new electric meters or meter programming options are encountered in the field.
- Noted several new pumping plants with low measured pump efficiencies. Could be combination of factors:
  - Possible inadequate well development
  - Check for electric meter reading error, ensure electric wiring is correct, pumps are turning in the correct direction, and all legs on three-phase are balanced.
  - Check that correct model and size of pump was installed
  - Pumps operated at different rpms than designed
  - Pump operating point mismatched with application needs
  - Possible flow meter inaccuracy
  - Pumping depth estimates or measurements may have been off
- Watch operation and maintenance requirements. To enhance future recommendations, talk to producers to learn their O&M procedures, timing, expenses, quantities of fluids needed, etc.
- Initial assumptions of annual pumping hours were too high for some areas. Need to interview farmers closely concerning time to complete individual irrigation sets and number of irrigations per season in order to estimate pumping costs and potential fuel cost reductions accurately.
- Noted need for frequent diesel fuel tank filter changes. Encountered a number of stopped-up tank filters.
- Pipeline velocities exceeding 5 feet per second were found. These operating conditions result in high friction losses and increased potential for

pipeline and appurtenance damage due to surge pressures.

- New and innovative procedures developed during field testing that greatly enhanced ease of obtaining field diesel flow measurement with diesel meter (portable fuel pump to prime diesel engines, fill fuel lines, install fuel line valves, and bleed air to make diesel meter work).
- Safety issues
  - — Drive shaft danger—lack of shields
  - — Electrical leaks
  - — Natural gas leaks
  - — Make sure a valve is at least partially open when starting pump
- Underloaded internal combustion engines. If input power supply has no problems, an electric motor can generally operate at near its rated efficiency when unloaded and operated at as low as 50 percent of its rated horsepower. Internal combustion engines generally do not respond to underloading in the same way. Generally, a significantly underloaded engine will see significant drops in engine efficiency.
- Overloading of electric motors: electric motors operated at or above their rated horsepower considering service factor will operate hot. The extra heat will be wasted energy and will decrease motor efficiency. This can result when a pumping plant that was installed to serve a low-pressure system is used without reworking to serve a new higher-pressure system.
- In areas where aquifer water tables have dropped and well yields have decreased, gate valves and Plexiglas windows are sometimes installed with a dresser coupling at the pump discharge. The gate valve is squeezed down on the discharge pipe until white water clears in the Plexiglas window indicating the pump is no longer pumping air. Pressures of 60 to 70 pounds per square inch have been observed on a pump that was producing only 35 gallons per minute. When this is done, it lowers pumping plant efficiency but with low well yield, pumping cost is low enough that operators sometimes do not realize the cost of inefficiency as quickly as they would on larger-yield wells (i.e., cost/ac-in is high but ac-in pumped is low).
- Electric motors on submersibles can overheat as a result of inadequate cooling water flow over the motor due to well or aquifer yield problems.
- Impellor adjustment on open and semiopen impellers may be needed (this should only be done by a qualified individual). Can be caused by—
  - — Sand pumping
  - — Past adjustment of impellors by unqualified individual
  - — Shaft tightening after initial or rework pump installation without followup adjustment
  - — Initial impellor adjustment may have been incorrect
- Improper natural ICE natural gas pressure at engine intake. Caused by:
  - — Pressure drop in gas line when multiple customers on line all irrigate at same time (pressure at carburetor too low)
  - — Operator adjustment of pressure regulator on gas meter without checking pressure with gage because of concerns about condition in sand pumping often resulting in pressure at engine intake being too high. Higher natural gas pressures will be required at engines intakes on engines equipped with a turbocharger.
  - — Faulty natural gas pressure regulator at engine or meter depending on delivery setup.
- Improper timing, carburetor adjustment, or worn spark plugs.
- Natural gas leaks—sniff and listen when possible. Kill the engine and check if there is low efficiency.
- During the test, if multiple pumping plants are on the same pipe network as the one being tested, go by the other plants and listen for running water. This would indicate a check valve stuck open and part of the flow from the tested plant not being measured. If this is found, it should be reported to the operator for check valve repair or replacement

(d) Possible errors in data gathering

(1) Incorrect gas or electric meter reading. Usually easy to spot on electric system because it is usually due to a missing multiplier and most of the

gas multipliers are fairly high. It is not as easy to spot on natural gas systems where the pressure correction multipliers are often somewhere between 1 and 1.5. Always verify multipliers on a particular meter with the energy supplier.

(2) Problems can occur when several pumping plants are served by one gas meter or one well. Check pump discharge pressure on each plant when all pumping plants are operating as the producer normally would. Then start up one pumping plant at a time and put back pressure on the plant to match discharge pressure the pumping plant had when the other pumping plants were operating also. Use a squeeze down valve to do this (be careful).

Appendix B

(a) Pump screens and screen requirements

Most surface water sources require use of at least some type of screen to protect the pumps, piping, valves, and fittings from debris in the water. A screen should be used on any source in which there may be foreign material larger than can pass through the pump easily. But even then, damage can be caused by small participles that may get lodged in the bearings and seals.

There are many types of screen that range from the type that fit directly onto the suction pipe to massive screens made to cover the entire sump. The screens can be anywhere from passive, which is a static screen that needs to be cleaned manually, to an active screen that incorporates the latest self-cleaning technology. Screens can be flat or circular, mounted vertically or horizontally, and can be constructed of many different materials. Common types of screens are shown in figures 8B–1 through 8B–10.

Figure 8B–2 Slanted screen with moving brush Ontario, OR

Figure 8B–1 Suction end screen with internal spray Twin Falls, ID

Figure 8B–3 Bank of rotating circular screens with internal sprays Farson, WY

Figure 8B–4 Rotating screen with external spray near Boardman, OR

Figure 8B–5 Vertical stationary screen Colusa, CA

Figure 8B–6 Slanted stationary screen Richland, WA

Figure 8B–7 Turbulent fountain screen Hotchkiss, CO

(b) Selection and design

Screening objectives, location, screen type, and cleaning method must be considered to develop a screen installation that compliments the pumping plant. Screening diversions can serve multiple objectives, such as fish protection, and debris and sediment management. Each objective will impact selection of screen location, screen type, and screen cleaning method. Conventional bar screens (trash racks) tend to be the most common method of screening. Suction strainers tend to clog more readily and are difficult to clean. Screens must be located to allow incoming flows to pass through the screen before reaching any pump intake, flow to be evenly distributed over the submerged surface, and cleaning to be accomplished coincident with pump operation.

Figure 8B–8 Flat over pour screen Othello, WA

(1) Screen material

Fish screens are commonly constructed using a metal frame supporting a screen fabric made from metal or a UV-protected synthetic material. The frame and screen fabric should be strong enough to prevent collapse of the screen should the screen fabric become totally plugged. The screen should be designed to withstand this condition as it produces the maximum water differential across the screen. Common screen fabrics used are woven wire, perforated plate, and wedge-wire (also called profile wire). Each fabric type can be found constructed of different materials including stainless steel, coated steel, aluminum, copper alloys, and synthetic materials like acrylic and nylon (fig. 8B–11). Choosing a screen fabric should include consideration of durability, cost, fabric structural support required, and ease of cleaning (Medford 2012).

Figure 8B–9 Perforated concrete drainage pipe used as a coarse screen Ft. Morgan, CO

Figure 8B–10 Coanda screen Lyman, WY

(2) Head loss

The head drop through a clean screen structure is a cumulative function of approach velocity, screen fabric, screen baffling, and screen type. Actual head loss, accounting for screen geometry and partial loss of screen area due to debris plugging, can be 5 to 10 times the head loss calculated for a clean screen. Screens should have enough surface and open area that the through velocity should be in the range of 1 to 2.5 feet per second (fish screens may require lower velocities) while still maintaining the desired screening function. The head loss through the screen may be calculated using equation 8–2 for local losses. The K factor will be based on several factors; Shape and size of the opening, thickness of the screen, approach velocity and velocity through the screen figure 8–B12 shows the relationship of some of these values. For more on losses through screen consult Discharge Coefficients through Perforated Plates at Reynolds Numbers of 400 to 3000 (Smith and Winkle 1958) and Fluid Flow through Woven Screens (Armour and Cannon 1968). Additional head may also be required for screens requiring a high sweeping velocity or a flow-driven power source. Screens may also impact the NPSHa, especially when partially clogged. These concerns need to be accounted for in the design.

(a) Fish screens

One of the biggest concerns for screens in recent years has become endangered species (mainly whether the screen is fish friendly or not). Some general criteria regarding pump screens and fish are as follows. These criteria may vary based on species and whether or not the problem is juvenile or adults.

- Screen material open area must be at least 27 percent of the total wetted screen area.
- Perforated plate: circular screen face openings must not exceed 3/32 or 0.0938 inch (2.38 mm) in diameter.
- Mesh/woven wire screen: square screen face openings must not exceed 3/32 or 0.0938 inch (2.38 mm) on a diagonal.
- Profile bar screen/wedge wire: slotted screen face openings must not exceed 0.0689 inch (1.75 mm) in the narrow direction.
- Screen area must be large enough not to cause fish impact. The wetted screen area required depends on the water approach velocity.
- Approach velocity is the water velocity perpendicular to and upstream of the vertical projection of the screen face.
- An active pump screen is a self-cleaning screen that has a proven automatic cleaning system. The screen approach velocity for active pump screens must not exceed 0.4 foot per second or 0.12 meter per second. The minimum wetted screen area needed in square feet is calculated by dividing the maximum water flow rate in cubic feet per second (1 ft^3/s = 449 gpm) by 0.4 cubic foot per second.

Figure 8B–11 Various screening materials.

- A passive pump screen is a screen that has no automated cleaning system. Screen approach velocity for passive pump screens must not exceed 0.2 cubic foot per second or 0.06 cubic meter per second. The minimum wetted screen area needed in square feet is calculated by dividing the maximum water flow rate in cubic feet per second by 0.2 cubic foot per second.
- Pump screen depth: the screen must be submerged at least one screen radius below the minimum water surface with a minimum of one screen radius between the screen bottom and the water bottom or constructed surface.

More information on designing fish screens can be found in Pocket Guide to Screening Small Water Diversions—A guide for planning and selection of fish screens for small diversions, available through the U.S. Bureau of Reclamation.

(b) Operation and maintenance

If a screen does a good job, it will become plugged and require cleaning. This can be a major source of maintenance and labor, depending on the water source. A method of accessing and cleaning the screen needs to be planned for and made part of the design. Trash can accumulate in such quantities as to entirely block the incoming flow. An accumulation of trash increases head loss and reduces the NPSHa. Many cleaning methods are available, however, most methods fall into one of three categories with combinations of cleaning methods also possible (Medford 2012).

- Back-flushing the screen to lift impinged debris off the surface using compressed air or pressurized water or rotating/pivoting the screen to back-wash the screen using screened flow.
- Mechanical or hand brushing or raking the upstream face of the screen.
- Creating a large sweeping velocity (Vs) to approach velocity (Va) ratio such that debris is swept along the screen by the sweeping flow.

The best method for each location, pump, and situation need to be selected early in the planning process To prevent screen failure later on.

Figure 8B–12 Screen material-velocity relationship

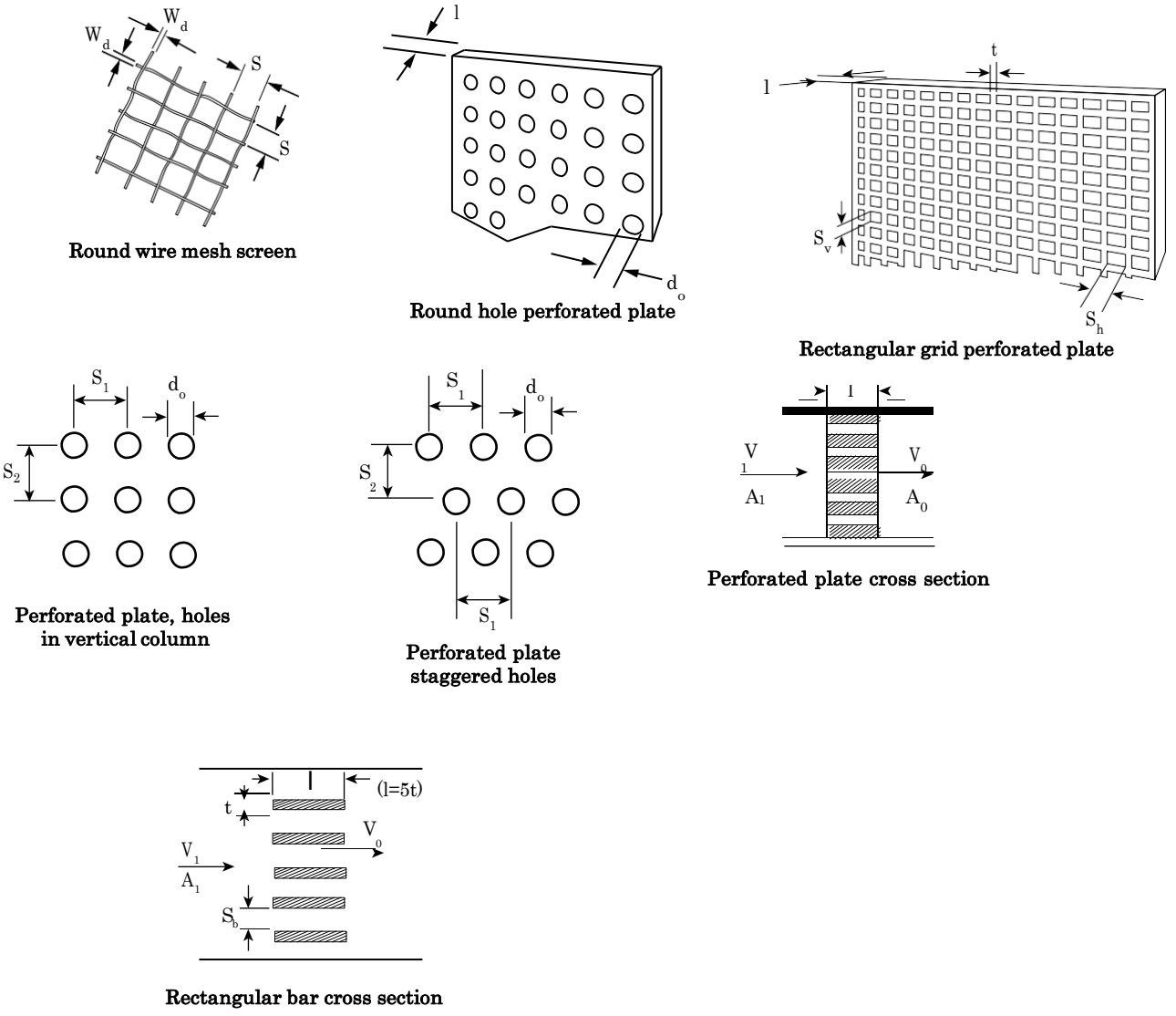

Appendix C

DRAFT

(a) Pump nomenclature

Nameplate Data

This will be a little different for each manufacturer, but figure 8C-1 demonstrates general method.

(b) Most common pump configurations

Figure 8C–2 demonstrates most of the common centrifugal pump configuration encountered in the field.

(c) Pump terms and parts

Figure 8C–3 shows cross sections of two styles of centrifugal pump labeling each of the parts.

The double volute pump is used to balance radial thrust from the impeller. It is particularly used for single stage large capacity, high head pumps and multi-stage pumps developing high heads.

Figure 8C–1 Nameplate nomenclature for a Berkeley pump.

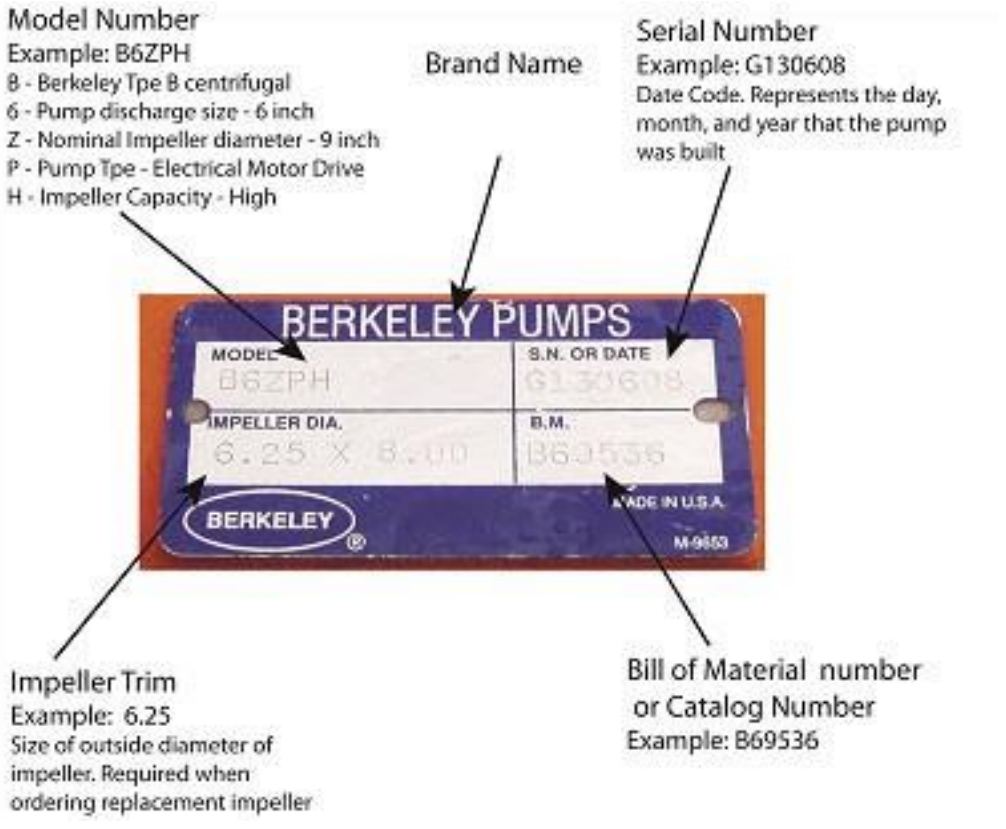

Figure 8C–2 Common pump configurations (courtesy of Corrnell Pump Company)

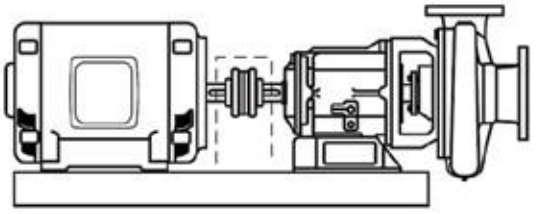

Base-coupling-guard mounted
horizontal frame unit
can be mounted with a motor or other
driver on a common base

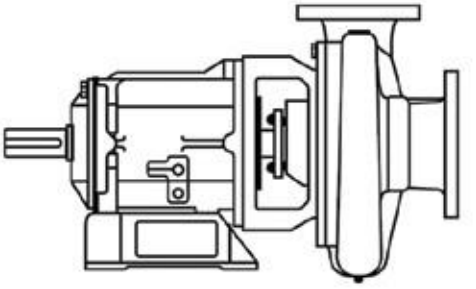

Horizontal frame (F)
driver flexibility

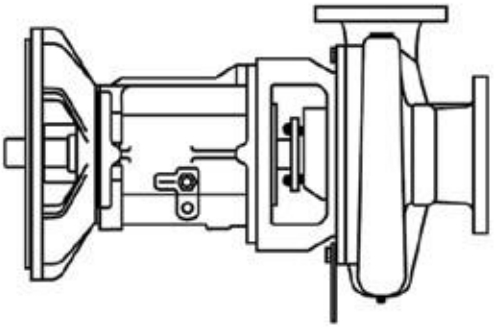

SAE engine mount (EM)
ideal for remote locations or where
electrical power is not available

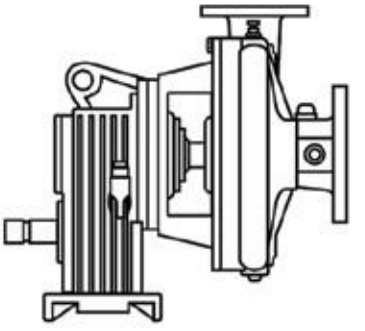

Close-coupled gear box

Vertical close-coupled (VM)
this vertical style is desirable
where space is limited

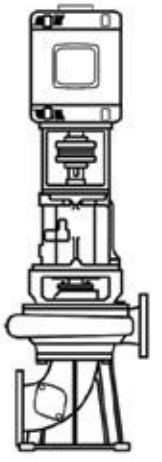

Vertical coupled (VC)
minimal floor space required
standard "P" base motor used

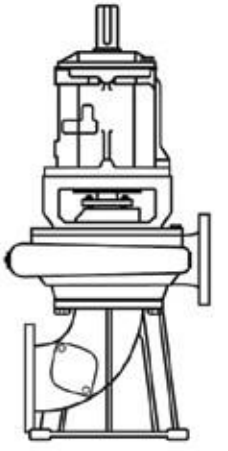

Vertical frame (VF)
driven by flexible shaft
from motor above pump

Figure 8C–3 Cross-section of two types of volute pumps.

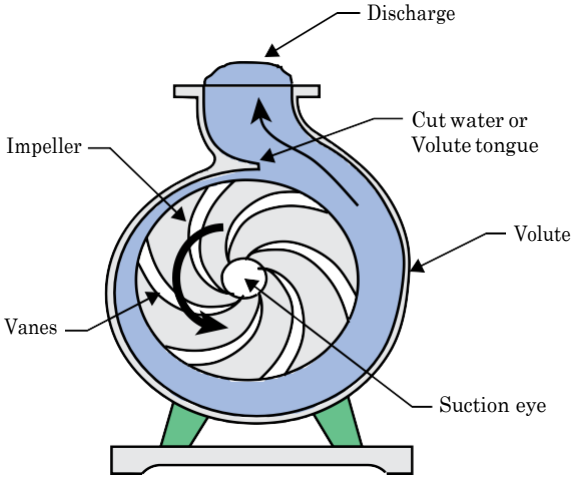

Single Volute Centrifugal Pump

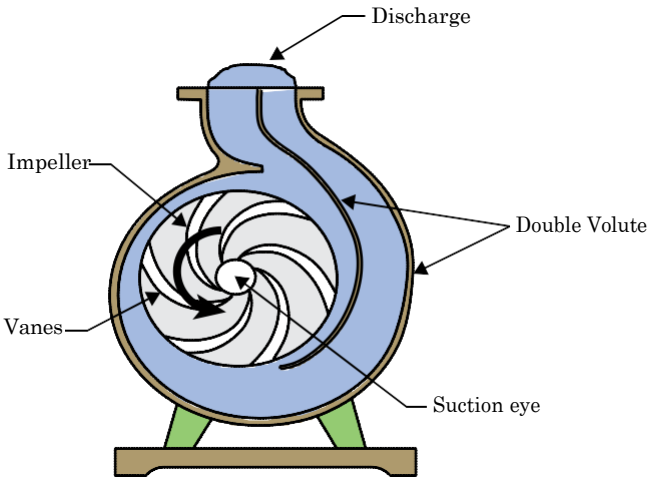

Double Volute Centrifugal Pump

Used to balance radial thrust from the impeller particularly used for single stage large capacity, high head pumps and multistage pumps developing high heads

Appendix D

(a) Motor efficiency tables

Table 8D–1 provides the minimum nominal efficiency ratings for high efficient motors under EISA legislation. Table 8D–2 provides EISA requirements for NEMA Premium™ motors (exceed EISA efficiency requirements). Table 8D–3 provides efficiencies for pre-EISA pump motors (standard efficiency).

Table 8D–1 Full-load efficiencies of energy efficient motors

Motor horsepower	Nominal full-load efficiency							
	Open motors				Enclosed motors			
	2 pole	4 pole	6 pole	8 pole	2 pole	4 pole	6 pole	8 pole
1	—	82.5	80.0	74.0	75.5	82.5	80.0	74.0
1.5	82.5	84.0	84.0	75.5	82.5	84.0	85.5	77.0
2	84.0	84.0	85.5	85.5	84.0	84.0	86.5	82.5
3	84.0	86.5	86.5	86.5	85.5	87.5	87.5	84.0
5	85.5	87.5	87.5	87.5	87.5	87.5	87.5	85.5
7.5	87.5	88.5	88.5	88.5	88.5	89.5	89.5	85.5
10	88.5	89.5	90.2	89.5	89.5	89.5	89.5	88.5
15	89.5	91.0	90.2	89.5	90.2	91.0	90.2	88.5
20	90.2	91.0	91.0	90.2	90.2	91.0	90.2	89.5
25	91.0	91.7	91.7	90.2	91.0	92.4	91.7	89.5
30	91.0	92.4	92.4	91.0	91.0	92.4	91.7	91.0
40	91.7	93.0	93.0	91.0	91.7	93.0	93.0	91.0
50	92.4	93.0	93.0	91.7	92.4	93.0	93.0	91.7
60	93.0	93.6	93.6	92.4	93.0	93.6	93.6	91.7
75	93.0	94.1	93.6	93.6	93.0	94.1	93.6	93.0
100	93.0	94.1	94.1	93.6	93.6	94.5	94.1	93.0
125	93.6	94.5	94.1	93.6	94.5	94.5	94.1	93.6
150	93.6	95.0	94.5	93.6	94.5	95.0	95.0	93.6
200	94.5	95.0	94.5	93.6	95.0	95.0	95.0	94.1
250	94.5	95.4	95.4	94.5	95.4	95.0	95.0	94.5
300	95.0	95.4	95.4	—	95.4	95.4	95.0	—
350	95.0	95.4	95.4	—	95.4	95.4	95.0	—
400	95.4	95.4	-—	—	95.4	95.4	—	—
450	95.8	95.8	—	—	95.4	95.4	—	—
500	95.8	95.8	—	—	95.4	95.8	—	—

Source: National Electrical Manufacturers Association, NEMA MG–1, table 21–11.

Table 8D–2 Full-load efficiencies for 60 Hz NEMA Premium®

Efficient electric motors rated 600 volts or less (random wound)						
Motor horsepower	Nominal full-load efficiency					
	Open motors			Enclosed motors		
	2 pole	4 pole	6 pole	2 pole	4 pole	6 pole
1	77.0	85.5	82.5	77.0	85.5	82.5
1.5	84.0	86.5	86.5	84.0	86.5	87.5
2	85.5	86.5	87.5	85.5	86.5	88.5
3	85.5	89.5	88.5	86.5	89.5	89.5
5	86.5	89.5	89.5	88.5	89.5	89.5
7.5	88.5	91.0	90.2	89.5	91.7	91.0
10	89.5	91.7	91.7	90.2	91.7	91.0
15	90.2	93.0	91.7	91.0	92.4	91.7
20	91.0	93.0	92.4	91.0	93.0	91.7
25	91.7	93.6	93.0	91.7	93.6	93.0
30	91.7	94.1	93.6	91.7	93.6	93.0
40	92.4	94.1	94.1	92.4	94.1	94.1
50	93.0	94.5	94.1	93.0	94.5	94.1
60	93.6	95.0	94.5	93.6	95.0	94.5
75	93.6	95.0	94.5	93.6	95.4	94.5
100	93.6	95.4	95.0	94.1	95.4	95.0
125	94.1	95.4	95.0	95.0	95.4	95.0
150	94.1	95.8	95.4	95.0	95.8	95.8
200	95.0	95.8	95.4	95.4	96.2	95.8
250	95.0	95.8	95.4	95.8	96.2	95.8
300	95.4	95.8	95.4	95.8	96.2	95.8
350	95.4	95.8	95.4	95.8	96.2	95.8
400	95.8	95.8	95.8	95.8	96.2	95.8
450	95.8	96.2	96.2	95.8	96.2	95.8
500	95.8	96.2	96.2	95.8	96.2	95.8

Source: National Electrical Manufacturers Association, NEMA MG-1, table 12–12.

Table 8D–3 Average efficiencies for standard-efficiency motors at various load points

Efficiencies for 900 rpm, standard-efficiency motors								
Motor size	Load level in percent							
	Open drip proof (ODP)				Totally enclosed fan cooled (TEFC)			
	100%	75%	50%	25%	100%	75%	50%	25%
10	87.2	87.6	86.3	78.3	86.8	87.6	86.8	77.3
15	87.8	88.8	88.2	79.6	87.5	88.7	88.1	79.1
20	88.2	89.2	88	81.8	89.2	89.9	89.2	82.6
25	88.6	89.2	88	83.0	89.7	90.3	89.1	78.6
30	89.9	90.7	90.2	84.5	89.6	90.5	86.5	84.1
40	91.0	91.8	91.7	86.2	90.5	91.4	85.5	85.0
50	90.8	91.9	91.1	87.1	90.2	91.0	90.2	84.9
75	91.7	92.4	92.1	86.5	91.6	91.8	91.0	87.0
100	92.2	92.2	91.8	85.8	92.4	92.5	92.0	83.6
125	92.9	92.3	91.7	86.9	93.0	93.1	92.1	87.9
150	93.3	93.1	92.6	89.5	93.0	93.4	92.5	NA
200	92.8	93.5	93.1	NA	93.7	94.1	93.4	NA
250	93.1	93.5	93.0	NA	91.7	94.8	94.5	NA
300	93.1	93.7	92.9	92.7	94.4	94.2	93.7	NA

Efficiencies for 1,200 rpm, standard-efficiency motors								
Motor size	Load level in percent							
	Open drip proof (ODP)				Totally enclosed fan cooled (TEFC)			
	100%	75%	50%	25%	100%	75%	50%	25%
10	87.3	86.9	85.7	78.5	87.1	87.7	86.4	80.3
15	87.4	87.5	86.8	80.8	88.2	88.1	87.3	80.7
20	88.5	89.2	88.8	84.1	89.1	89.7	89.4	82.8
25	89.4	89.7	89.3	85.0	89.8	90.5	89.8	83.5
30	89.2	90.1	89.8	87.6	90.1	91.3	90.7	84.6
40	90.1	90.4	90.0	85.8	90.3	90.1	89.3	85.3
50	90.7	91.2	90.9	86.9	91.6	92.0	91.5	86.7
75	92.0	92.5	92.3	88.6	91.9	91.6	91.0	87.2
100	92.3	92.7	92.2	87.4	92.8	92.7	91.9	86.5
125	92.6	92.9	92.8	87.9	93	93	92.6	88.7
150	93.1	93.3	92.9	89.7	93.3	93.8	93.4	91.1
200	94.1	94.6	93.5	91.5	94.0	94.3	93.6	NA
250	93.5	94.4	94.0	91.9	94.6	94.5	94.0	NA
300	93.8	94.4	94.3	92.9	94.7	94.8	94.0	NA

Table 8D–3 Average efficiencies for standard-efficiency motors at various load points—continued

Efficiencies for 1,800 rpm, standard-efficiency motors								
Motor size	Load level in percent							
	Open drip proof (ODP)				Totally enclosed fan cooled (TEFC)			
	100%	75%	50%	25%	100%	75%	50%	25%
10	86.3	86.8	85.9	80	87	88.4	87.7	80
15	88	89	88.5	82.6	88.2	89.3	88.4	80.7
20	88.6	89.2	88.9	83.3	89.6	90.8	90.0	83.4
25	89.5	90.6	90.0	86.6	90.0	90.9	90.3	83.4
30	89.7	91.0	90.9	87.3	90.6	91.6	91	85.6
40	90.1	90.0	89.0	86.3	90.7	90.5	89.2	84.2
50	90.4	90.8	90.3	88.1	91.6	91.8	91.1	86.3
75	91.7	92.4	92.0	87.7	92.2	92.5	91.3	87.1
100	92.2	92.8	92.3	89.2	92.3	92.1	91.4	85.5
125	92.8	93.2	92.7	90.7	92.6	92.3	91.3	84
150	93.3	93.3	93.0	89.2	93.3	93.1	92.2	86.7
200	93.4	93.8	93.3	90.7	94.2	94.0	93.1	87.8
250	93.9	94.4	94.0	92.6	93.8	94.2	93.5	89.4
300	94.0	94.5	94.2	93.4	94.5	94.4	93.3	89.9

Efficiencies for 3,600 rpm, standard-efficiency motors								
Motor size	Load level in percent							
	Open drip proof (ODP)				Totally enclosed fan cooled (TEFC)			
	100%	75%	50%	25%	100%	75%	50%	25%
10	86.3	87.7	86.4	79.2	86.1	87.2	85.7	77.8
15	87.9	88.0	87.3	82.8	86.8	87.8	85.9	79.5
20	89.1	89.5	88.7	85.2	87.8	89.6	88.3	79.7
25	89.0	89.9	89.1	84.4	88.6	89.6	87.9	79.3
30	89.2	89.3	88.3	84.8	89.2	90.0	88.7	81.0
40	90.0	90.4	89.9	86.9	89.0	88.4	86.8	79.7
50	90.1	90.3	88.7	85.8	89.3	89.2	87.3	82.0
75	90.7	91.0	90.1	85.7	91.2	90.5	88.7	82.5
100	91.9	92.1	91.5	89.0	91.2	90.4	89.3	83.8
125	91.6	91.8	91.1	88.8	91.7	90.8	89.2	82.6
150	92.0	92.3	92.0	89.2	92.3	91.7	90.1	85.6
200	93.0	93.0	92.1	87.9	92.8	92.2	90.5	84.9
250	92.7	93.1	92.4	87.1	92.7	92.5	91.2	90.3
300	93.9	94.3	93.8	90.4	93.2	92.8	91.1	89.9

Source: U.S. Dept. of Energy: Determining electric motor load and efficiency, DOE/GO–10097–517, Motor Challenge Program.

DRAFT

Table 8E–1 Present value of a series of annual equal payments

A = 1
n = 20.0
i = 0.04
P = 13.5903

$$P = (A)\frac{1}{i}\left[1 - \frac{1}{(1+1)^n}\right]$$

P = present value factor (where A = 1)
n = number of years for series of annual payments
i = annual interest rate expressed as a decimal

	Annual interest rate, i, percent											
n, years	**1%**	**2%**	**3%**	**4%**	**5%**	**6%**	**7%**	**8%**	**9%**	**10%**	**11%**	**12%**
1	0.9901	0.9804	0.9709	0.9615	0.9524	0.9434	0.9346	0.9259	0.9174	0.9091	0.9009	0.8929
2	1.9704	1.9416	1.9135	1.8861	1.8594	1.8334	1.8080	1.7833	1.7591	1.7355	1.7125	1.6901
3	2.9410	2.8839	2.8286	2.7751	2.7232	2.6730	2.6243	2.5771	2.5313	2.4869	2.4437	2.4018
4	3.9020	3.8077	3.7171	3.6299	3.5460	3.4651	3.3872	3.3121	3.2397	3.1699	3.1024	3.0373
5	4.8534	4.7135	4.5797	4.4518	4.3295	4.2124	4.1002	3.9927	3.8897	3.7908	3.6959	3.6048
6	5.7955	5.6014	5.4172	5.2421	5.0757	4.9173	4.7665	4.6229	4.4859	4.3553	4.2305	4.1114
7	6.7282	6.4720	6.2303	6.0021	5.7864	5.5824	5.3893	5.2064	5.0330	4.8684	4.7122	4.5638
8	7.6517	7.3255	7.0197	6.7327	6.4632	6.2098	5.9713	5.7466	5.5348	5.3349	5.1461	4.9676
9	8.5660	8.1622	7.7861	7.4353	7.1078	6.8017	6.5152	6.2469	5.9952	5.7590	5.5370	5.3282
10	9.4713	8.9826	8.5302	8.1109	7.7217	7.3601	7.0236	6.7101	6.4177	6.1446	5.8892	5.6502
15	13.8651	12.8493	11.9379	11.1184	10.3797	9.7122	9.1079	8.5595	8.0607	7.6061	7.1909	6.8109
20	18.0456	16.3514	14.8775	13.5903	12.4622	11.4699	10.5940	9.8181	9.1285	8.5136	7.9633	7.4694
25	22.0232	19.5235	17.4131	15.6221	14.0939	12.7834	11.6536	10.6748	9.8226	9.0770	8.4217	7.8431
30	25.8077	22.3965	19.6004	17.2920	15.3725	13.7648	12.4090	11.2578	10.2737	9.4269	8.6938	8.0552
35	29.4086	24.9986	21.4872	18.6646	16.3742	14.4982	12.9477	11.6546	10.5668	9.6442	8.8552	8.1755
40	32.8347	27.3555	23.1148	19.7928	17.1591	15.0463	13.3317	11.9246	10.7574	9.7791	8.9511	8.2438
45	36.0945	29.4902	24.5187	20.7200	17.7741	15.4558	13.6055	12.1084	10.8812	9.8628	9.0079	8.2825
50	39.1961	31.4236	25.7298	21.4822	18.2559	15.7619	13.8007	12.2335	10.9617	9.9148	9.0417	8.3045

Example: Find the time period (n), in years in the left column and the interest rate (i) in the top row of the table. The intersection for n = 20 years, and I = 4% gives a present value factor of 13.5903. For an equal annual payment of $75 per year for 20 years, the present value, P, is calculated as P = ($75) (13.5903) = $1,019.27. This is the amount, that if invested at the beginning of year 1 at 4% interest rate, would service an annual year-end payment of $75.

Table 8E–2 Present value of a series of annual payments with escalating rate

Example PV factor

n = 10

i = 4.0%

e = 3.0%

PVF = 9.208

$$PV = A\left[\frac{(1+e)}{(i-e)}\left(1-\frac{1}{(1+1)^n}\right)\right] \quad \text{for } i \neq e$$

$$PV = A(n) \quad \text{for } i \neq e$$

PV = present value

n = number of years for series of annual payments

i = annual interest rate expressed as a decimal

e = rate of escalation of annual payment A

A = annual payment amount that escalates at rate, e

n, year	i=2.0% e=2.0%	i=2.0% e=3.0%	i=2.0% e=4.0%	i=4.0% e=2.0%	i=4.0% e=3.0%	i=4.0% e=4.0%	i=5.0% e=2.0%	i=5.0% e=3.0%	i=5.0% e=4.0%	i=6.0% e=2.0%	i=6.0% e=3.0%	i=6.0% e=4.0%
1	1.0000	1.0098	1.0196	0.9808	0.9904	1.0000	0.9714	0.9810	0.9905	0.9623	0.9717	0.9811
2	2.0000	2.0295	2.0592	1.9427	1.9712	2.0000	1.9151	1.9432	1.9715	1.8882	1.9159	1.9438
3	3.0000	3.0592	3.1192	2.8861	2.9427	3.0000	2.8318	2.8872	2.9432	2.7792	2.8334	2.8882
4	4.0000	4.0990	4.2000	3.8114	3.9048	4.0000	3.7223	3.8131	3.9057	3.6366	3.7249	3.8148
5	5.0000	5.1490	5.3019	4.7188	4.8576	5.0000	4.5874	4.7214	4.8589	4.4616	4.5912	4.7240
6	6.0000	6.2093	6.4255	5.6089	5.8013	6.0000	5.4278	5.6125	5.8031	5.2555	5.4329	5.6160
7	7.0000	7.2800	7.5711	6.4818	6.7359	7.0000	6.2441	6.4865	6.7384	6.0195	6.2509	6.4912
8	8.0000	8.3611	8.7391	7.3379	7.6615	8.0000	7.0371	7.3439	7.6647	6.7546	7.0456	7.3498
9	9.0000	9.4529	9.9301	8.1775	8.5782	9.0000	7.8075	8.1850	8.5821	7.4620	7.8179	8.1923
10	10.0000	10.5554	11.1444	9.0010	9.4861	10.0000	8.5559	9.0100	9.4909	8.1427	8.5684	9.0188
11	11.0000	11.6687	12.3826	9.8087	10.3853	11.0000	9.2828	9.8194	10.3910	8.7977	9.2976	9.8298
12	12.0000	12.7929	13.6450	10.6009	11.2758	12.0000	9.9890	10.6133	11.2825	9.4279	10.0061	10.6255
13	13.0000	13.9281	14.9321	11.3778	12.1578	13.0000	10.6751	11.3921	12.1655	10.0344	10.6946	11.4061
14	14.0000	15.0745	16.2445	12.1397	13.0313	14.0000	11.3415	12.1560	13.0401	10.6180	11.3637	12.1720
15	15.0000	16.2321	17.5826	12.8870	13.8963	15.0000	11.9889	12.9054	13.9064	11.1796	12.0137	12.9235
16	16.0000	17.4010	18.9470	13.6200	14.7531	16.0000	12.6178	13.6406	14.7644	11.7200	12.6454	13.6608
17	17.0000	18.5814	20.3381	14.3388	15.6016	17.0000	13.2287	14.3617	15.6143	12.2400	13.2592	14.3842
18	18.0000	19.7734	21.7565	15.0439	16.4420	18.0000	13.8222	15.0691	16.4561	12.7404	13.8557	15.0939
19	19.0000	20.9770	23.2027	15.7353	17.2743	19.0000	14.3987	15.7630	17.2898	13.2219	14.4352	15.7903
20	20.0000	22.1925	24.6773	16.4135	18.0986	20.0000	14.9587	16.4437	18.1156	13.6852	14.9984	16.4735
21	21.0000	23.4199	26.1808	17.0786	18.9149	21.0000	15.5027	17.1115	18.9336	14.1310	15.5456	17.1438
22	22.0000	24.6593	27.7137	17.7309	19.7235	22.0000	16.0312	17.7665	19.7437	14.5601	16.0773	17.8014
23	23.0000	25.9108	29.2767	18.3707	20.5242	23.0000	16.5446	18.4090	20.5462	14.9729	16.5940	18.4467
24	24.0000	27.1747	30.8704	18.9982	21.3172	24.0000	17.0434	19.0393	21.3410	15.3701	17.0961	19.0798

Table 8E–2 Present value of a series of annual payments with escalating rate—continued

n, year	i=2.0%			i=4.0%			i=5.0%			i=6.0%		
	e=2.0%	e=3.0%	e=4.0%	e=2.0%	e=3.0%	e=4.0%	e=2.0%	e=3.0%	e=4.0%	e=2.0%	e=3.0%	e=4.0%
25	25.0000	28.4509	32.4953	19.6136	22.1026	25.0000	17.5278	19.6576	22.1282	15.7524	17.5839	19.7009
26	26.0000	29.7396	34.1521	20.2172	22.8805	26.0000	17.9985	20.2642	22.9079	16.1202	18.0579	20.3103
27	27.0000	31.0410	35.8413	20.8092	23.6509	27.0000	18.4557	20.8591	23.6802	16.4742	18.5186	20.9083
28	28.0000	32.3551	37.5637	21.3898	24.4138	28.0000	18.8998	21.4428	24.4452	16.8148	18.9662	21.4949
29	29.0000	33.6821	39.3199	21.9592	25.1695	29.0000	19.3312	22.0153	25.2029	17.1425	19.4011	22.0705
30	30.0000	35.0222	41.1104	22.5177	25.9179	30.0000	19.7503	22.5769	25.9533	17.4579	19.8237	22.6352

Table 8E–3 Present value (P) factor of a single future payment (F)

FV = 1

n = 10
i = 6.0%

PV = 0.5584

$$PV = A\left[\left(\frac{1+e}{i-e}\right)\left(1-\left(\frac{1+e}{+i}\right)^{n}\right)\right] \quad \text{for } i \neq e$$

$$PV = A(n) \quad \text{for } i \neq e$$

PV = Present value
n = number of interest periods of investment
i = annual interest rate expressed as a decimal

n (year)	Annual interest rate (i), percent											
	1%	2%	3%	4%	5%	6%	7%	8%	9%	10%	11%	12%
1	0.9901	0.9804	0.9709	0.9615	0.9524	0.9434	0.9346	0.9259	0.9174	0.9091	0.9009	0.8929
2	0.9803	0.9612	0.9426	0.9246	0.9070	0.8900	0.8734	0.8573	0.8417	0.8264	0.8116	0.7972
3	0.9706	0.9423	0.9151	0.8890	0.8638	0.8396	0.8163	0.7938	0.7722	0.7513	0.7312	0.7118
4	0.9610	0.9238	0.8885	0.8548	0.8227	0.7921	0.7629	0.7350	0.7084	0.6830	0.6587	0.6355
5	0.9515	0.9057	0.8626	0.8219	0.7835	0.7473	0.7130	0.6806	0.6499	0.6209	0.5935	0.5674
6	0.9420	0.8880	0.8375	0.7903	0.7462	0.7050	0.6663	0.6302	0.5963	0.5645	0.5346	0.5066
7	0.9327	0.8706	0.8131	0.7599	0.7107	0.6651	0.6227	0.5835	0.5470	0.5132	0.4817	0.4523
8	0.9235	0.8535	0.7894	0.7307	0.6768	0.6274	0.5820	0.5403	0.5019	0.4665	0.4339	0.4039
9	0.9143	0.8368	0.7664	0.7026	0.6446	0.5919	0.5439	0.5002	0.4604	0.4241	0.3909	0.3606
10	0.9053	0.8203	0.7441	0.6756	0.6139	0.5584	0.5083	0.4632	0.4224	0.3855	0.3522	0.3220
15	0.8613	0.7430	0.6419	0.5553	0.4810	0.4173	0.3624	0.3152	0.2745	0.2394	0.2090	0.1827
20	0.8195	0.6730	0.5537	0.4564	0.3769	0.3118	0.2584	0.2145	0.1784	0.1486	0.1240	0.1037
25	0.7798	0.6095	0.4776	0.3751	0.2953	0.2330	0.1842	0.1460	0.1160	0.0923	0.0736	0.0588
30	0.7419	0.5521	0.4120	0.3083	0.2314	0.1741	0.1314	0.0994	0.0754	0.0573	0.0437	0.0334
50	0.6080	0.3715	0.2281	0.1407	0.0872	0.0543	0.0339	0.0213	0.0134	0.0085	0.0054	0.0035
60	0.5504	0.3048	0.1697	0.0951	0.0535	0.0303	0.0173	0.0099	0.0057	0.0033	0.0019	0.0011
75	0.4741	0.2265	0.1089	0.0528	0.0258	0.0126	0.0063	0.0031	0.0016	0.0008	0.0004	0.0002
100	0.3697	0.1380	0.0520	0.0198	0.0076	0.0029	0.0012	0.0005	0.0002	0.0001	0.0000	0.0000

Example 8E–1—Life cycle costing example diesel engine vs. electric powering a vertical turbine pump

Scenario:
A farmer has the option to install either electric power or diesel power for a deep-well vertical turbine pump (VTP) for irrigating row crops. Costs for the belowground components (well, pump and pump shaft) are identical for each option and are not included in the cost comparison. Use a standard inventory electric motor size to operate the pump at 1,800 rpm. The water-cooled engine will be cooled by pumped irrigation water, rather than a fan and radiator. The right-angle gear drive will be rebuilt after one service life and replaced at the end of the service life for the rebuilt unit.

Given:

Flow rate (Q)	900 gpm
Total dynamic head (TDH)	180 feet*
Pump efficiency	75%
Annual operating hours	2,200 hrs
Irrigated area	160 acres
Inflation rate	4%
Interest rate for alternative investment	6%
Electric power rate	$0.085 per kWh
Diesel fuel cost	$2.95 per gallon
Drive efficiency for electric motor	100%
Drive efficiency for diesel (drive line /w 90° gear drive)	95%
Elevation, above mean sea level	2,000 feet
Maximum ambient operating temperature	105 °F
Distance from electric power source to pump	5,280 feet

Equipment	Cost, $/unit	Service life	Rebuild cost (% of new cost)	Annual maintenance cost	Salvage value (% of new cost)
NEMA Premium efficiency vertical hollow-shaft motor (OPD) (Motor drive efficiency = 100%)	100.00/hp	20	50	1% (of new)	10%
Power transmission line (3 phase)	15.00/ft	60			66.67%
Note: The transmission cable for electricity has a long service life (nearly infinite), but power poles have a shorter life (30 to 90 years or more). Using the extremely long service life of the transmission cable would require a large value for the least common multiple service life, making the analysis very cumbersome. The analysis can be simplified by setting the service life of the power line to the life of the poles and setting the salvage value equal to the cost of power line minus the cost of pole replacement. If the installed costs are $10 per foot for the conducting cable, and $600 each for poles, and the pole spacing of 125 feet, the cost is nearly two-thirds for cable and one-third for poles, so a 67% salvage value can be used to reflect the reuse of the power cable when the poles are replaced.					
Electrical control panel	1,500.00 ea	30			0
Diesel engine (rated continuous operation, properly maintained and adjusted)	$110.00/hp	15	60%	15% (of annual fuel)	10%

Example 8E–1—Life cycle costing example diesel engine vs. electric powering a vertical turbine pump—continued

Right-angle gearhead with drive-line	4,500.00 ea	10	50%	100	10%
Fuel tank, 1,000 gal. (new)	6,000.00 ea	30			10%

Find:
Determine the more economical choice between diesel and electric power using life cycle cost analysis. Determine the required electric motor size and annual costs associated with the operation of the electric motor. Use engine horsepower factors to size the diesel engine (for determining cost of diesel engine). Use pump input horsepower and NPPC fuel consumption factors to calculate diesel fuel consumption. Determine annual fuel cost.

Solution:
Step 1: Calculate component lives for calculating least cost multiple of service lives: electric motor, 20 years.; three-phase power line, 60 years.; electrical panel, 30 years.; diesel engine, 15 years.; right-angle gearhead, 10 years; diesel fuel tank, 30 years.

Excel spreadsheet, least common multiple function = LCM (number1, number2, number3…)
=LCM(20,60,30,15,10,30)=60
Since the LCM service life is 60, the LCCA analysis will require the following schedule for replacement and salvage:

Schedule for electric motor		Schedule for diesel engine
Replace motor every 20 years, beginning at year 20. Do not replace at end of year 60.		Replace diesel engine every 15 years, beginning at year 15. Do not replace at end of year 60.
Salvage motor every 20 years, beginning at year 20, including at end of year 60.		Salvage diesel engine every 15 years, beginning at year 15, including at end of year 60.
Replace electrical panel every 30 years, beginning at year 30. Do not replace at end of year 60.		Rebuild gearhead every 20 years, beginning at year 10. Do not rebuild at end of year 60.
Salvage electrical panel every 30 years, beginning at year 30, including at end of year 60.		Replace gearhead every 20 years, beginning at year 20. Do not replace at end of year 60.
Salvage power line every 60 years, beginning at year 60.		Salvage gearhead every 20 years, beginning at year 20, including at end of year 60.
		Replace fuel tank every 30 years, beginning at year 30. Do not replace at end of year 60.
		Salvage fuel tank every 30 years, beginning at year 30, including at end of year 60.

Example 8E–1—Life cycle costing example diesel engine vs. electric powering a vertical turbine pump—continued

Step 2:

Calculate brake horsepower (eq. 8–11).

Electric motor bhp = (900 gal/min × 180 ft)/(3,960 × 0.75 × 1.0) = 54.5 hp

Diesel motor bhp = (900 gal/min × 180 ft)/(3,960 × 0.75 × .95) = 57.4 hp

Next determine the input horse power (eq. 8–12)

Electric motor

Select a standard motor size larger than required bhp – 60hp

Check against figure 8–89 to make sure there is no reduction for operating at less than 100% load

Percent of full load 54.5/60 = 91%, no loss of efficiency – OK

Determine motor efficiency from table 8C–2 (four-pole 60-hp motor) – 95%

$$\text{ihp} = \frac{54.5}{0.95} = 57.4 \text{ hp}$$

Diesel motor

Determine engine derating

Elevation: 3% per 1,000 feet of elevation above sea level

2×3% = 6%

Temperature: 1% per 10 °F rise of ambient air temperature above 60 °F = (105-60)/10 = 4.5 use 5%

Accessories (alternator, air cleaner, heat exchanger, etc.) = 5%

Fan and radiator (zero if pumped water is used for cooling rather than radiator) = 0%

Engine wear factor: to allow for horsepower loss due to wear over the life of the engine = 10%

De-rating for continuous duty (zero if engine rated for continuous duty) = 0%

Total de-rating = 6 + 5 + 5 + 10 = 31%

$$\text{ihp} = \frac{57.4}{(1-0.31)} = 83.2 \text{ hp}$$

Step 3:

Calculate annual fuel costs for both options.

Electric motor

$$\text{Electric power consumption kWh} = (\text{ihp}) \times (0.746 \text{ kW/hp}) \times (\text{h/yr}) = 57.4 \times .746 \times 2{,}200 = \$8{,}007$$

Example 8E–1—Life cycle costing example diesel engine vs. electric powering a vertical turbine pump—continued

$$\text{Annual fuel costs} = \text{kWh} \times \$/\text{kWh}$$
$$= 94{,}205 \times .085$$
$$= \$8{,}007$$

Diesel

From table 8–9, read hp-h per gallon of diesel = 16.66hp-h

*NPPC energy use factors are based on input power to the pump (drive loss and derating already considered). Therefore use input power to pump for estimating the diesel fuel cost.

$$\text{Fuel consumption} = \text{gal/yr}$$
$$= \frac{(\text{ihp})}{\text{hp-h/gal} \times \text{h/yr}}$$
$$= \frac{57.4}{16.66 \times 2{,}200}$$
$$= 7{,}580 \text{ gal}$$

$$\text{Annual fuel costs} = (\text{gal/yr}) \times (\$/\text{gal})$$
$$= 7{,}580 \times 2.95$$
$$= \$22{,}361$$

Example 8E–1—Life cycle costing example diesel engine vs. electric powering a vertical turbine pump—continued

Step 4:

Calculate capital costs:

Electric		Diesel	
Motor costs (60 hp × $100/hp)	$6,000	Engine cost (83 hp × $110/hp)	$9,130
Annual maintenance (1% of new cost)	$60	Annual maintenance (15% of annual fuel bill $22361 × .15)	$3,354
Salvage value (10% of new at 20 yr)	$600	Salvage value (10% of new at 15 yr)	$1,370
Electric panel	$1,500	Fuel tank	$6,000
Power line (5,280 feet × $15/ft)	$79,200	Salvage value (%10 of new at 30yrs)	$600
		Gear head	$4,500
		Rebuild (50% of new)	$2,250
		Salvage (10% of new)	$450
		Gear head maintenance ($/yr)	$100

Summary first year capital investment

Electric		Diesel	
Motor	$6,000	Engine	$9130
Maintenance	$60	Maintenance	$3,354
Electric panel	$1,500	Fuel	$22,361
Power line	$79,200	Fuel tank	$6,000
Electricity	$8,007	Gear head	$4,500
		Gear head maintenance	$100
Total	$94,767	Total	$45,445

Example 8E–1—Life cycle costing example diesel engine vs. electric powering a vertical turbine pump—continued

Step 5:

Determine the present value for the different items. The present value factors can be obtained from table 8D–3 by taking the interest rate = $6.0% and the inflation rate = 4.0% then subtracting the two to come up with a discount interest rate, i = 2.0%

Electric motor, years of new motors and salvage events:	PV factors	Present value		Diesel engine years of new motor and salvage events:	PV factors	Present value
Year n = 0 ; new (P/F,n,i) =	1.00000	$6,000		Year n = 0 ; new (P/F,n,i) =	1.00000	$9,130
Year n = 20 ; salvage (P/F,n,i) =	–0.67297	($404)		Year n = 15 ; salvage (P/F,n,i)	–0.74301	($1,018)
Year n = 20 ; new (P/F,n,i) =	0.67297	$4,038		Year n = 15 ; new (P/F,n,i) =	0.74301	$6,784
Year n = 40 ; salvage (P/F,n,i) =	–0.45289	($272)		Year n = 30 ; salvage (P/F,n,i)	–0.55207	($756)
Year n = 40 ; new (P/F,n,i) =	0.45289	$2,717		Year n = 30 ; new (P/F,n,i) =	0.55207	$5,040
Year n = 60 ; salvage (P/F,n,i) =	–0.30478	($183)		Year n = 45 ; salvage (P/F,n,i)	–0.41020	($562)
				Year n = 45 ; new (P/F,n,i) =	0.41020	$3,745
				Year n = 60 ; new (P/F,n,i) =	–0.30478	($418)
Annual power costs ($8007)				**Diesel fuel ($22,361)**		
($8007/yr) × (P/A, 60, 0.02)	34.7609	$278,331		($22361/yr) × (P/A ,n ,i)	34.7609	$777,288
Annual maintenance 1% of new				**Annual maintenance 15% of annual fuel)**		
($60/yr) × (P/A,60,0.02)	34.7609	$2,086		($3354/yr) × (P/A, n ,i)	34.7609	$116,593
Electric panel:				**Fuel tank:**		
Year n=0; New (P/F,n ,i)	1.0000	$1,500		Year n=0 (P/F, n, i)	1.0000	$6,000
Year n=30; New (P/F,n ,i)	0.5521	$828		Year n=30 salvage (P/F, n, i)	-0.55207	($331)
Power line 3∅(5,280 ft)				Year n=30 new (P/F, n, i)	0.55207	$3312
Year n=0; new (P/F, n, i)	1.0000	$79,200		Year n=60 salvage (P/F, n, i)	-0.30478	($183)
Year n=60; salvage (P/F, n,i)	–0.30478	($24,139)		**Gearhead:**		
				Year n = 0 ; new (P/F,n,i) =	1.00000	$4,500
				Year n = 10 ; rebuild (P/F,n,i)	0.82035	$1,846
				Year n = 20 ; salvage (P/F,n,i)	–0.67297	($303)
				Year n = 20 ; new (P/F,n,i)	0.67297	$3,028
				Year n = 30 ; rebuild (P/F,n,i)	0.55207	$1,242
				Year n = 40 ; salvage (P/F,n,i)	–0.45289	($204)
				Year n = 40 ; new (P/F,n,i) =	0.45289	$2,038
				Year n = 50 ; rebuild (P/F,n,i)	0.37153	$836
				Year n = 60 ; salvage (P/F,n,i)	–0.30478	($137)
				Gearhead maintenance (annual oil change):		
				($100 per yr.) × (P/A, 60, .02)	34.7609	$3,476
Present value electric motor option		**$349,702**		**Present value diesel engine option**		**$940,946**

Conclusion:
The decision between electric power and diesel power for a pump may be based more on initial capital outlay rather than the option with the lowest present value. In the case of the electric pump, the power transmission line may require a large capital expenditure at the beginning of year one. If the transmission line is long, the initial expenditure for the power line may create much larger initial outlay of cash than the owner is willing to spend (especially with debt incurred for the other items). It may be beneficial to evaluate the annual costs over a shorter time period (5 or 10 years) to formulate a decision.

Notes:

- Engine derating differs among manufacturers and even among models from the same manufacturer. Consult manufacturer for specific derating factors.
- Component costs, life spans, and maintenance shown are for example only and should not be used as a basis for actual cost estimates.
- This example compares only the components that are not common to both installations (a complete irrigation economic evaluation should include costs for well or sump, pipes valves, etc.).
- A thorough evaluation may require the evaluation of additional components.
- Utility companies may assess standby power availability fees and time of use fees in addition to the power usage. These fees are not considered in this example.
- Fractional horsepower motors under partial load may experience significant efficiency reduction.
- Motors greater than 1 hp may experience significant efficiency reduction at load levels below 50 percent of rated horsepower.

Appendix F Local Losses

Table 8F–1 Local losses

Pipe Size →		2"	3"	4"	5"	6"	7"	8"	10"	12" +
Elbows										
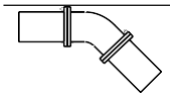	Bend, 45 deg. std. steel or plastic	0.29	0.26	0.23	0.23	0.21	0.2	0.2	0.19	0.18
	Bend, 45 deg. long radius	0.19	0.19	0.18	0.18	0.18	0.17	0.17	0.17	0.16
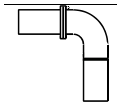	Bend, 90 deg. std. steel or plastic	0.38	0.34	0.31	0.3	0.28	0.27	0.26	0.25	0.24
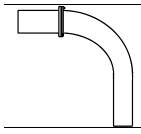	Bend, 90 deg. long radius	0.27	0.25	0.22	0.2	0.18	0.17	0.15	0.14	0.13
	Bend, 90 deg. miter	0.8	0.7	0.6	0.6	0.6	0.6	0.6	0.6	0.5
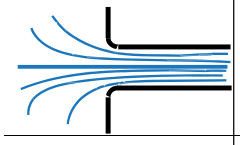	Entrance, bell mouth headwall	0.04	0.04	0.04	0.04	0.04	0.04	0.04	0.04	0.04
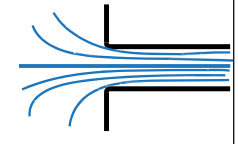	Entrance, rounded headwall	0.23	0.23	0.23	0.23	0.23	0.23	0.23	0.23	0.23
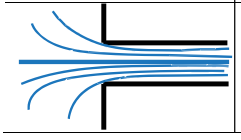	Entrance, sharp cornered headwall	0.5	0.5	0.5	0.5	0.5	0.5	0.5	0.5	0.5

Table 8F–1 Local losses—continued

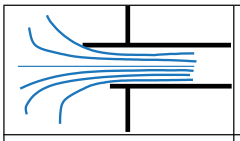	Entrance, sharp projecting	0.78	0.78	0.78	0.78	0.78	0.78	0.78	0.78	0.78
Exit										
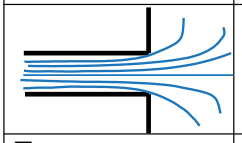	Exit all	1.0	1.0	1.0	1.0	1.0	1.0	1.0	1.0	1.0
Tees		0.6	0.6	0.5	0.4	0.3	0.3	0.3	0.3	0.3
	Tee, hydrant (off)									
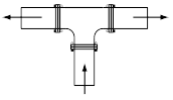	Tee, branching	1.6	1.3	1.2	1.1	1	0.9	0.9	0.8	0.8
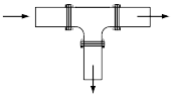	Tee, line flow	0.8	0.7	0.6	0.6	0.5	0.5	0.5	0.4	0.4
Valves		2	2	2	2	2	2	2	2	2
	Alfalfa valve plate type)									
	Alfalfa valve with hood (estimate)	4	4	4	4	4	4	4	4	4
	Valve, angle type (open)	2.3	2.2	2.1	2	2	2	2	2	2
	Valve, butterfly type (open)	0.8	0.8	0.8	0.8	0.8	0.7	0.6	0.5	0.5
	Valve, check, foot valve type	0.8	0.8	0.8	0.8	0.8	0.8	0.8	0.8	0.8
	Valve, check, swing type	2	2	2	2	2	2	2	2	2
	Valve, circle leaf, (open)	0.08	0.08	0.08	0.08	0.08	0.08	0.08	0.08	0.08
	Valve, circle leaf, 20% open	27	27	27	27	27	27	27	27	27

Table 8F–1 Local losses—continued

	Valve, circle leaf, 30% open	10	10	10	10	10	10	10	10	10
	Valve, circle leaf, 40% open	4.4	4.4	4.4	4.4	4.4	4.4	4.4	4.4	4.4
	Valve, circle leaf, 50% open	2.3	2.3	2.3	2.3	2.3	2.3	2.3	2.3	2.3
	Valve, gate type, (open)	0.21	0.16	0.13	0.11	0.09	0.075	0.06	0.05	0.05
	Valve, gate type, 25% open	20	18	16	15	14	13.5	13	12.5	12
	Valve, gate type, 50% open	3	2.8	2.6	2.5	2.4	2.25	2.3	2.25	2.2
	Valve, globe type, (open)	7.8	7	6.3	6	5.8	5.7	5.6	5.5	5.4
	Valve, slide gate at headwall	0.5	0.5	0.5	0.5	0.5	0.5	0.5	0.5	0.5
	Valve, sprinkler hydrant (open)	8	8	7.5	7	6.7	6.7	6.7	6.7	6.7
	Strainer, basket type	1.5	1.25	1.05	0.95	0.85	0.8	0.75	0.67	0.5
Contraction/expansions		K Values for expansions and contractions								
	Value of D_{large}/D_{small}	1.2	1.6	2	2.5	3	4	5	10	
	45° gradual contraction	.03	0.05	0.05	0.05	0.05	0.05	.05	.05	
	45° gradual expansion	.03	0.05	0.06	0.06	0.06	0.07	.07	.07	
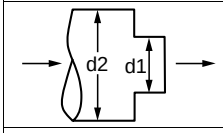	Sudden contraction	.07	0.26	0.38	0.42	0.44	0.46	0.48	0.48	
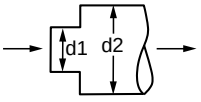	Sudden expansion	0.10	0.39	0.58	0.72	0.80	0.89	0.93	0.99	

Appendix G Equations

8–1 $$N_s = \frac{(n\sqrt{Q})}{H^{\frac{3}{4}}}$$

8–2 $$h_l = K_l \frac{V^2}{2g}$$

8–3 $$whp = \frac{(Q)(H)(SG)}{3,960}$$

8–4 $$\frac{rpm_1}{rpm_2} = \frac{Q_1}{Q_2} = \frac{\sqrt{h_1}}{\sqrt{h_2}} = \frac{\sqrt[3]{bhp_1}}{\sqrt[3]{bhp_2}}$$

8–5 $$\frac{d_1}{d_2} = \frac{Q_1}{Q_2} = \frac{\sqrt{h_1}}{\sqrt{h_2}} = \frac{\sqrt[3]{bhp_1}}{\sqrt[3]{bhp_2}}$$

8–6 $$Eff = \frac{(Q_b + Q_a)H}{3,960(Bhp\ at\ Q_b + Bhp\ at\ Q_a)}$$

8–7 $$Eff = \frac{Q(H_a + H_b)}{3,960(Bhp\ at\ H_a + Bhp\ at\ H_b)}$$

8–8 $$TDH = h_l + h_d - h_s$$

8–9 $$Percent\ overload = \frac{(IHP \times Em \times 100)}{(nameplate\ horsepower)}$$

8–10 $$S = \frac{120f}{n}$$

8–11 $$VD = \frac{(2 \times L \times R \times I)}{1,000}$$

8–12 $$bhp = \frac{whp}{(pump\ efficiency)(drive\ efficiency)}$$

8–13 $$input\ horsepower, ihp = \frac{bhp}{(motor\ efficiency)}$$

8–14 $$kw\ input\ to\ motor = 0.746 \times ihp$$

8–15 $$\frac{kw\text{-}hr}{1000\ gallons\ pumped} = \frac{(0.00314)(TDH)}{(pump\ efficiency)(drive\ efficiency)(motor\ efficiency)}$$

8–16
$$\frac{(\text{kw-hr})}{(\text{acre-ft})} = \frac{(1.024)(\text{TDH})}{(\text{pump efficiency})(\text{drive efficiency})(\text{motor efficiency})}$$

8–17
$$\text{OPE} = \left(\frac{\text{whp}}{\text{ihp}}\right)(100)$$

8–18
$$\text{NPSHA} = h_{bar} - h_s - h_{fs} - \sum h_m - h_{vap} - h_{vol} - \text{FS}$$

8–19
$$\sigma = \frac{\frac{p_a}{\gamma} - \frac{p_v}{\gamma} - H_s}{H}$$

8–20
$$\text{Hourly power cost} = (\text{iph})\left(0.746\ \frac{\text{kW}}{\text{hp}}\right)\left(\frac{\text{cost}}{\text{kWh}}\right)$$

8–21
$$\text{Annual power cost} = (\text{ihp})(0.746\ \text{kW/hp})(\text{cost/kWh})(\text{hours of operation})$$

8–22
$$\text{Energy cost per ac-ft} = (\text{kWh per ac-ft})(\text{cost per kWh})$$

8–23
$$\text{Annual energy cost} = (\text{total ac-ft for year})\ (\text{kwh/ac-ft})\ (\text{cost per kwh})$$

8–24
$$\text{Annual cost savings} = (0.746)(\text{bhp})(\text{cost/kWh})(\text{annual operating h})\left(\frac{1}{\text{Eff}_{M1}} - \frac{1}{\text{Eff}_{M2}}\right)$$

8–25
$$\text{Payback period, years} = \frac{(\text{cost of motor}_{EE} - \text{cost of motor}_{SE})}{(\text{annual energy cost}_{SE} - \text{annual energy cost}_{EE})}$$

8–26
$$\text{Present value factor} = \left(\frac{P}{A,n,i}\right) = \left[\frac{1-(1+i)^{-n}}{i}\right]$$

8–27
$$PV = A\left[\frac{1}{i}\left(\frac{i}{1-(1+i)^{-n}}\right)\right]$$

PV=A[(1/i)(1-1/(1+i)^n)]

8–28 $$PV = C + \frac{A}{i}\left[\frac{1}{i}\left(\frac{i}{1-(1+i)^{-n}}\right)\right]$$

8–29 $$\left(\frac{P}{F}, n, i\right) = P(1+i)^{n}$$

8–30 $$\left(\frac{F}{P}, n, i\right) = \frac{P}{(1+j)^{n}}$$

8–31 $$FV = PV\left[\frac{(1+i)^{n}}{(1+j)^{n}}\right]$$

8–32 $$i' = \frac{i-1}{1+j}$$

8–33 $$e' = \frac{e-1}{1+j}$$

8–34 $$e = \left(\frac{F}{P}\right)^{\frac{1}{n}} - 1$$

8–35 $$PV = C + A\left[\left(\frac{1+e}{i-e}\right)\left(1-\left(\frac{1+e}{1+i}\right)^{n}\right)\right] \quad \text{for } i \neq e$$

8–36 $$PV = C + (A)[n/((1+e))]$$

8–37 $$\text{NPPC rating}(\%) = \left(\frac{\text{measured pumping plant whp-hr per unit of fuel}}{\text{NPPC whp-hr per unit of fuel}}\right)(100)$$

8–38 $$\text{Fuel cost/h} = (\text{bhp})(\text{fuel consumed, gal/bhp/h})(\text{fuel cost, \$/gal})$$

8–39 $$\text{Total annual fuel cost} = (\text{cost per hour})(\text{total hours operated})$$

8–40 $$1 \text{ gallon of diesel} = (130{,}000 \text{ BTU})\left(\frac{1 \text{ hp}}{2{,}545 \text{ BTU}}\right) = 51 \text{ hp-h}$$

8–41 $$\text{cost per ac-ft pumped} = \frac{0.026877\,(\text{TDH})(\text{\$/gallon diesel})}{(\text{pump efficiency})(\text{drive efficiency})(\text{engine efficiency})}$$

8–42

$$\%\text{ of NPPC rating} = \left(\frac{\text{NPPC BTU/ft}^3}{\text{NPPC hp-hr output}}\right)\left(\frac{\text{actual hp-hr output}}{\text{actual BTU/ft}^3}\right)(100)$$

8–43

$$\%\text{ of NPPC rating of natural gas} = (11.25)\left(\frac{\text{actual hp-hr output}}{\text{actual BTU/ft}^3}\right)(100)$$

8–44

$$PV = \frac{FV}{(1+i)^n}$$

8A–1

$$\text{kWh/hr} = \frac{3.6(K_h\text{ Factor})(\text{No. of disk revolutions})(\text{applicable multiplier(s)})}{(\text{Time in seconds})}$$

8A–2

$$\text{Energy cost/h} = (\text{cost/unit of fuel or energy})(\text{fuel or energy use, units/h})$$

8A–3

$$\text{ihp} = (\text{Energy consumption rate, energy units/h})\left(\frac{\text{hp-hr)}}{(\text{energy unit})}\right)$$

8A–4

$$\text{kVA} = \frac{(V \times A)}{1{,}000}$$

8A–5

$$\text{kWh/h} = \text{kW} = \text{kVA} \times \text{PF}$$

8A–6
$$\frac{\text{kWh/h}}{\text{h}} = \text{kW} = \frac{V \times A \times PF}{1{,}000}$$

8A–7
$$\frac{\text{kWh/h}}{\text{h}} = \text{kW} = \frac{V \times A \times PF \times 1.73}{1{,}000}$$

8A–8
$$\text{Pressure correction factor} = \frac{\text{gage } (\text{lb/in}^2) + \text{atmos. pressure } (\text{lb/in}^2)}{\text{calibration press.}(\text{lb/in}^2) + \text{atmos. press}(\text{lb/in}^2)}$$

8A–9
$$\text{Fuel consumption ft}^3\text{/h} = \frac{(\text{ft}^3 \text{ used})(\text{meter constant})}{\text{Time } (\text{minutes})}$$

8A–10
$$1 \text{ Mcf} = 1{,}000 \text{ ft}^3$$

8A–11
$$\text{Energy cost per hr} = \left(\frac{\$ \text{ cost}}{\text{unit of fuel}}\right) \times \left(\frac{\text{fuel consumed}}{\text{hr}}\right)$$

8A–12
$$\text{ihp} = \left(392.93 \ \frac{\text{hp-hr}}{\text{Mcf}}\right)\left(\text{Fuel consumption } \frac{\text{Mcf}}{\text{hr}}\right)$$

8A–13
$$\text{ihp} = \left(392.93 \ \frac{(\text{hp-hr})}{\text{Mcf}}\right)\left(\frac{(\text{energy content of natural gas BTU/ft}^3)}{1{,}000 \text{ BTU/ft}^3}\right)(\text{Fuel consumption, Mcf/hr})$$

8A–14
$$1 \text{ dekatherm} = 1{,}000{,}000 \text{ BTU}$$

8A–15
$$\frac{\text{one dekatherm}}{\text{Mcf}} = \left(\frac{1{,}000{,}000 \text{ BTU}}{1{,}000 \text{ ft}^3}\right) = 1{,}000 \text{ BTU/ft}^3$$

8A–16
$$\frac{\text{Energy cost}}{\text{hr}} = \left(\frac{\$}{\text{decatherm}}\right)\left(\frac{\text{decatherm}}{\text{Mcf}}\right)\left(\frac{\text{Mcf}}{\text{hr of gas usage}}\right)$$

8A–17
$$\text{SOE} = ((\text{Potential component Eff})(\text{Potential component Eff})\ldots)(100)$$

8A–18
$$Q(\text{ac-in/h}) = \frac{Q(\text{gpm})}{452.6}$$

8A–19 $$\text{Pumping cost/ac-in} = \frac{\text{pumping cost } (\$/\text{h})}{\text{Q ac-in/h}}$$