6. STRUCTURAL DESIGN EXAMPLE

General. The following example deals with the stability and structural design only. It was assumed that the site location had been selected and that the hydrologic data indicated that the structure should be designed for a peak discharge of 610 cfs. The explanation of the methods and procedures of design are contained in the example or referenced to the corresponding sections of the Engineering Handbook.

Hydraulic Design (Design Q = 610 cfs)(F = 12.0 ft)

Weir dimensions: Try h = 4'-0" and L = 30'-0" and compute capacity by equation 3.5 (page 3.7).

$$Q = \frac{3.1\ Lh^{3/2}}{1.10 + 0.01F} = \frac{3.1 \cdot 30 \cdot 8}{1.22} = 610 \text{ cfs} \qquad \text{OK}$$

Height of Transverse Sill (s): $s = h \div 3 = 4.0 \div 3 = 1.33' = 1'\text{-}4''$

Apron Length (L_B) and Height of Sidewall (J): (See ES-67, page 5.3)

$$J_{(min)} = 2h = 2 \cdot 4 = 8.0', \quad L_{B(min)} = 1.28 \cdot 12 = 15.36'$$

Use sidewall layout shown in the following layout drawing and determine combinations that will maintain 2 to 1 fill slope with 1.0 ft. of fill over upstream edge of headwall extension.

$$J = F + h + s + 1.0 - \left(\frac{L_B + 5''}{2}\right) - \frac{10''}{2}$$

$$L_B = 2\ (F + h + s + 1.0 - J) - 0.417 - 0.833$$

$$L_B = 2\ (12 + 4.0 + 1.33 + 1 - J) - 1.25$$

$$L_B = 35.42 - 2J$$

When $J = 8.0$ ft, $L_B = 19.42$ ft

When $J = 9.0$ ft, $L_B = 17.42$ ft

When $J = 10.0$ ft, $L_B = 15.42$ ft

Select and use $J = 9'\text{-}0''$, $L_B = 17'\text{-}3''$

Shape of Sidewall: The sidewall will have a level top except near the headwall, where it will be shaped to confine the nappe. Plot the path of the upper nappe (See ES-68, page 6.3) from the crest elevation to the level portion of sidewall. Take $d_c = 2/3\ h = 2.67$ ft.

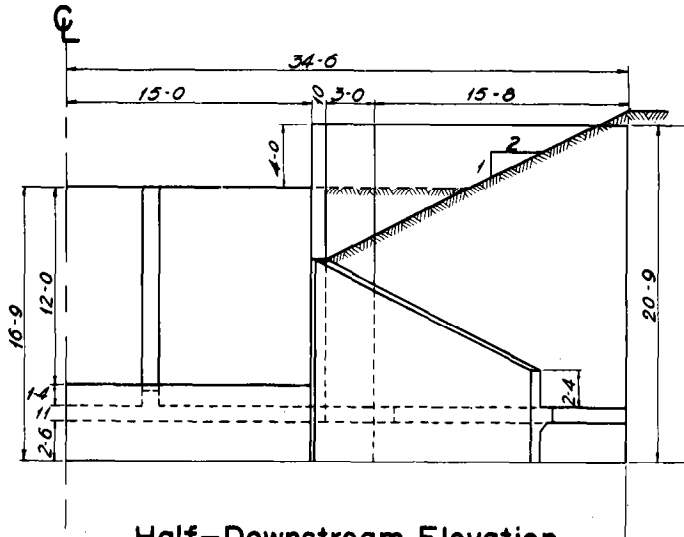

Half–Downstream Elevation

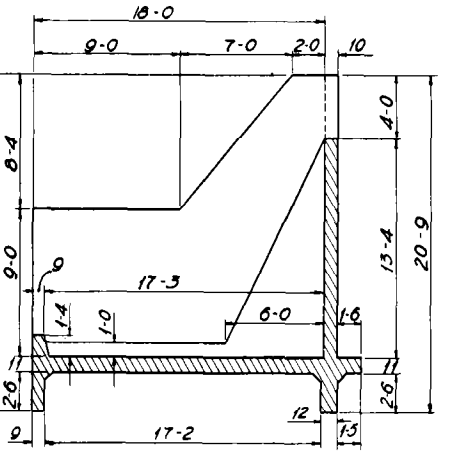

Cross-section along ℄

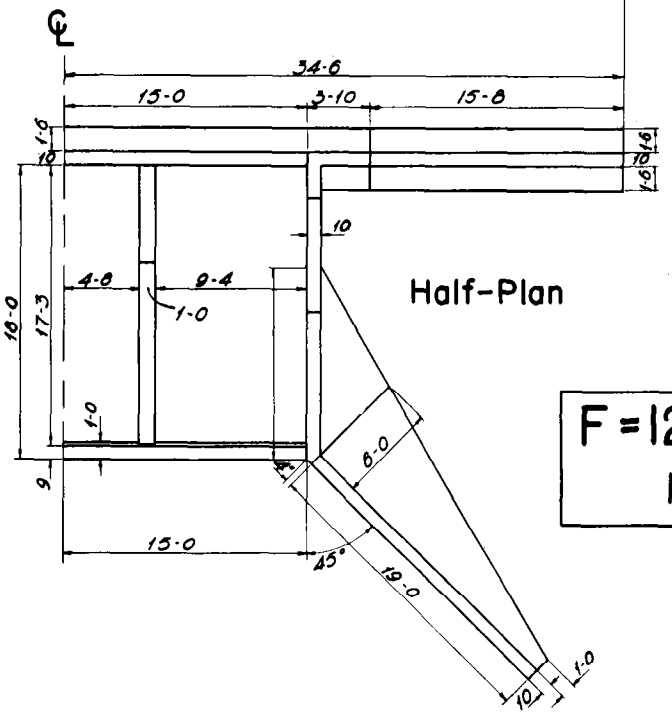

Half–Plan

F = 12-0, h = 4-0, L = 30-0

Handbook Example

DROP SPILLWAYS: DIMENSIONLESS COORDINATES OF WATER SURFACES FOR AERATED NAPPE OVER WEIR WITH LEVEL, FLUSH APPROACH CHANNEL

EQUATIONS

Upper Surface of nappe

$$\frac{x}{d_c} = 2.12\sqrt{\frac{y}{d_c} + 0.69} - 0.38 \quad \text{when } \frac{y}{d_c} > 0.3$$

Lower Surface of nappe

$$\frac{x}{d_c} = 2.12\sqrt{\frac{y}{d_c}} - 0.38 \quad \text{when } \frac{y}{d_c} > 1.0$$

NOTE

The given equations define the nappe surfaces only when the flow conditions are as follows:

1. Approach Channel is level for a distance of 3.0 d_c upstream from the weir.
2. Approach Channel is flush with the weir crest.
3. Nappe is completely aerated.

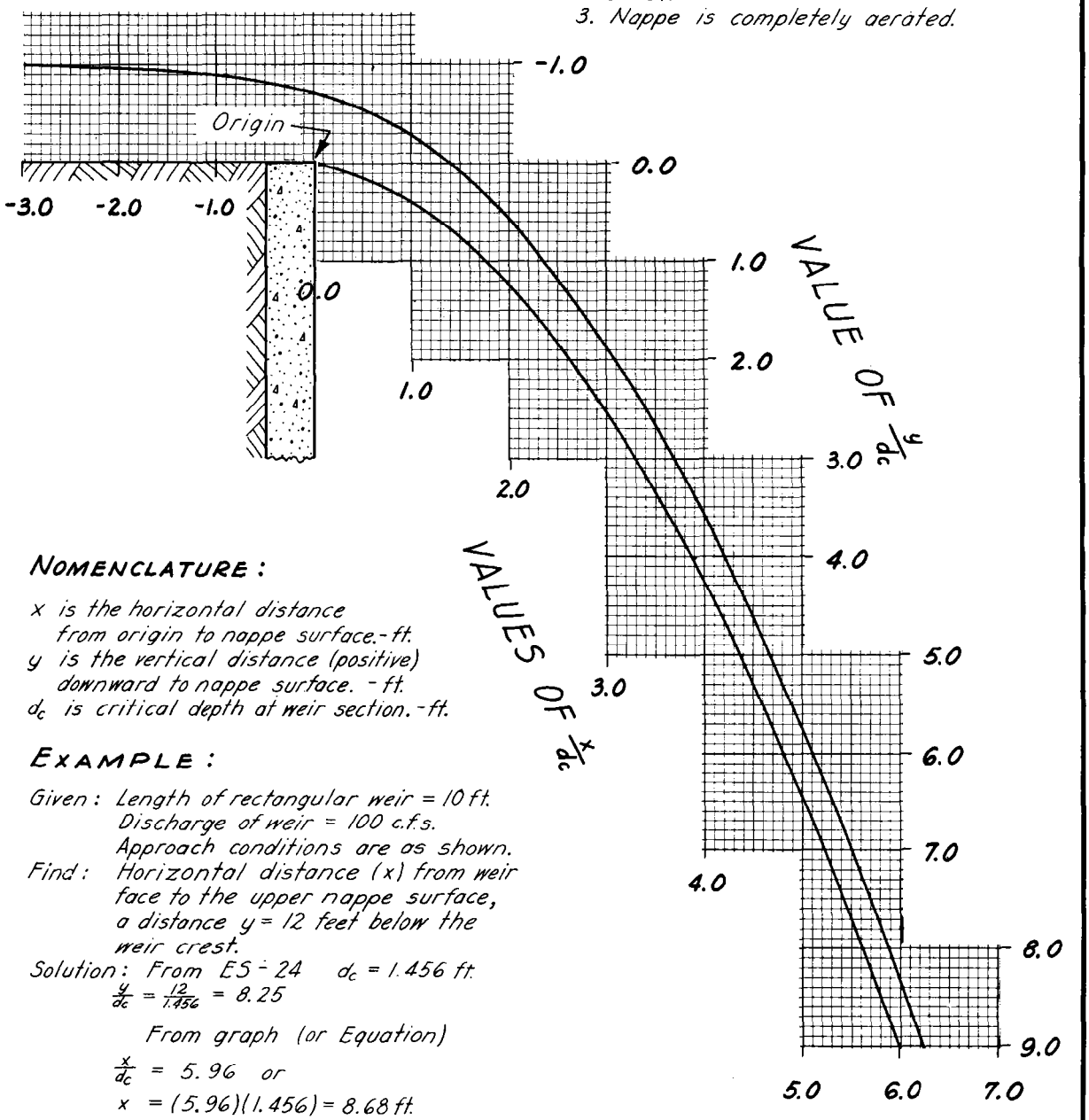

NOMENCLATURE:

x is the horizontal distance from origin to nappe surface. - ft.
y is the vertical distance (positive) downward to nappe surface. - ft.
d_c is critical depth at weir section. - ft.

EXAMPLE:

Given: Length of rectangular weir = 10 ft.
Discharge of weir = 100 c.f.s.
Approach conditions are as shown.

Find: Horizontal distance (x) from weir face to the upper nappe surface, a distance y = 12 feet below the weir crest.

Solution: From ES - 24 $d_c = 1.456$ ft.

$$\frac{y}{d_c} = \frac{12}{1.456} = 8.25$$

From graph (or Equation)

$$\frac{x}{d_c} = 5.96 \quad \text{or}$$

$$x = (5.96)(1.456) = 8.68 \text{ ft.}$$

U. S. DEPARTMENT OF AGRICULTURE
SOIL CONSERVATION SERVICE
Robert M. Salter, Chief
ENGINEERING STANDARDS UNIT

STANDARD DWG. NO.
ES - 68
SHEET 1 OF 1
DATE 3-3-52

y	y/d_c	x/d_c	x
0	0	1.4	3.74
1	0.375	1.8	4.81
2	0.750	2.15	5.73
3	1.125	2.45	6.55
4	1.500	2.73	7.29
5	1.875	3.00	8.00

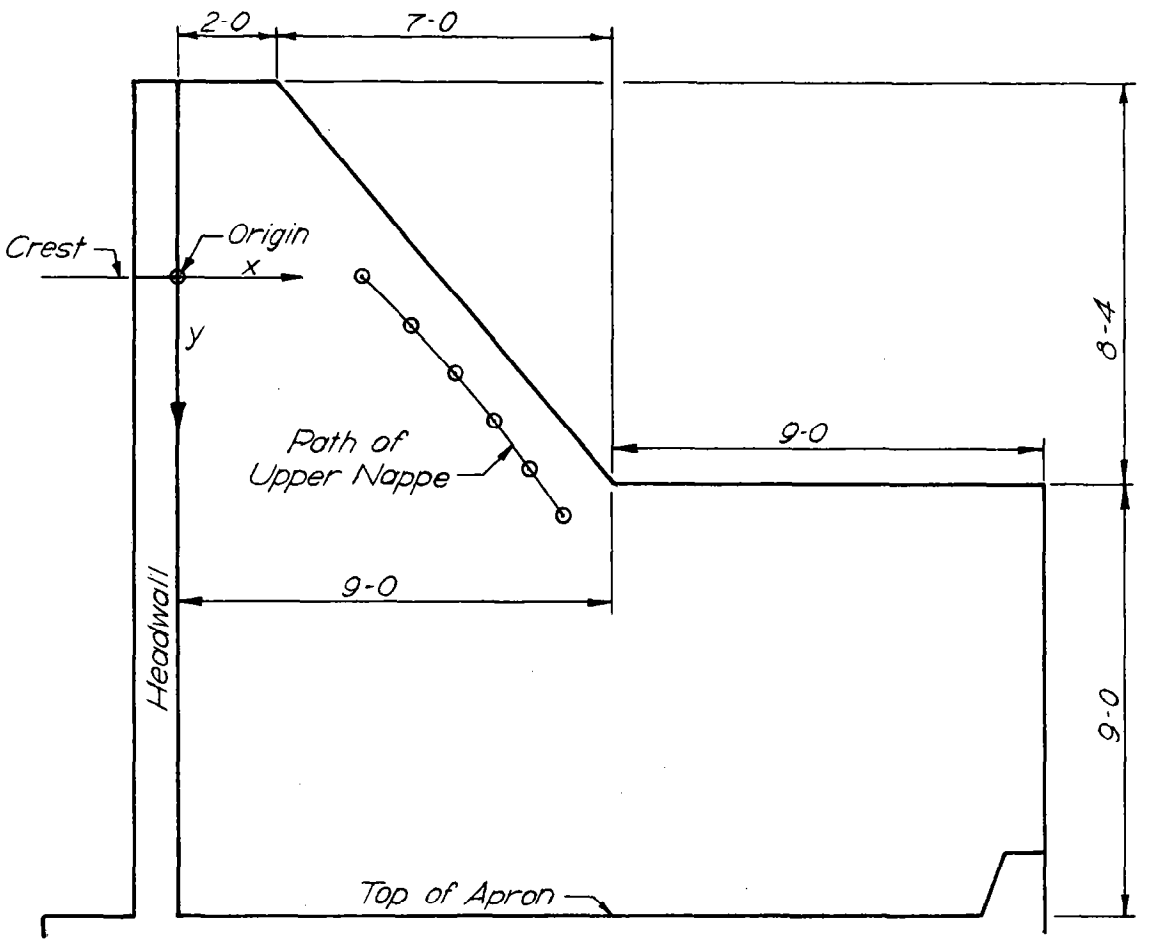

<u>Downstream flow</u>: (Tailwater depth above transverse sill, t)

Required depth, t = 4.6 ft (See fig. 5.1, page 5.2)

(d_c = 2.67, k = 1.25)

Allowable velocity (max) = 3.0 fps

s = 0.00095 ft/ft, n = 0.035, sideslopes 3 to 1 or z = 3

Try channel bottom width, b = 30 ft (See ES-33, Section 5, Hydraulics)

$$\text{Hydraulic radius, } r = \frac{bd + zd^2}{b + 2d\sqrt{z^2 + 1}} = \frac{30 \cdot 4.6 + 3 \cdot 4.6^2}{30 + (2 \cdot 4.6\sqrt{9 + 1})}$$

$$r = \frac{201.5}{59.1} = 3.41$$

See ES-34, Section 5, Hydraulics

With r = 3.41, s = 0.00095, and n = 0.035, v = 2.97 fps OK

t + s = tailwater depth above apron = 4.60 + 1.33 = 5.93 ft

Use 6.0 ft for design purposes

Stability Design: The stability of the structure will be checked for a representative bay. The representative bay will extend 30.83 ÷ 6 = 5.14 ft on both sides of the center line of a buttress.

Design of drain and drain filter above structure: Preliminary investigations indicated it would be advantageous to design a very good drain and filter upstream from the headwall to reduce uplift and to minimize the forces tending to slide the structure. Therefore, a drain similar to the one discussed on pages 6.2-13 and 6.2-14 of the Structural Design Section will be used. Use 4 in. Perforated Clay Pipe, with 1/4 in. diameter perforation, four rows, 3 in. spacing. A.S.T.M. Designation C-211.

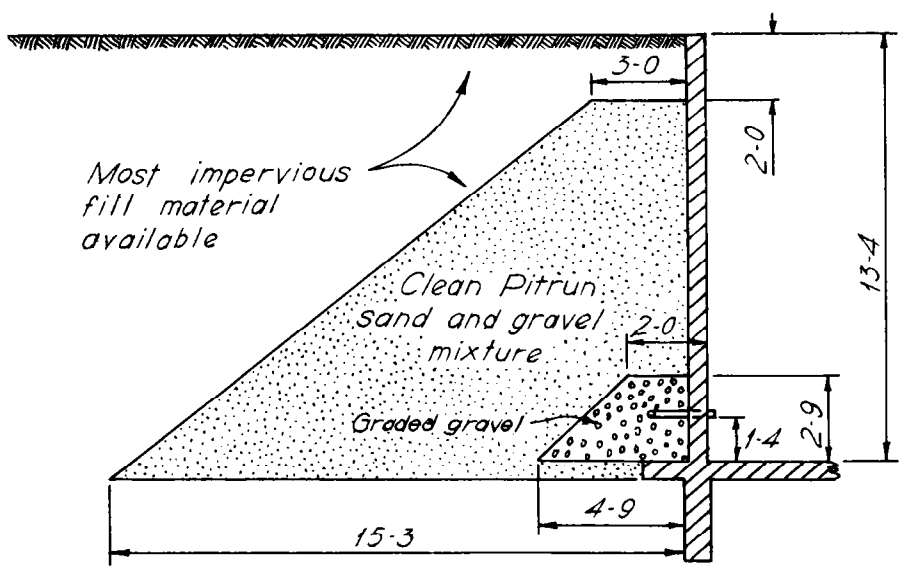

Criteria for Filter Gradation

Graded Gravel

$$\frac{\text{85 percent size of gravel}}{\text{diameter of perforation}} \geq 1.0$$

Pitrun Sand and Gravel

$$\frac{\text{15 percent size of gravel}}{\text{85 percent size of pitrun}} \leq 4 \text{ to } 5 \leq \frac{\text{15 percent size of gravel}}{\text{15 percent size of pitrun}}$$

and

$$\frac{\text{15 percent size of pitrun}}{\text{85 percent size of foundation}} \leq 4 \text{ to } 5 \leq \frac{\text{15 percent size of pitrun}}{\text{15 percent size of foundation}}$$

GRAIN SIZE CURVES
(U. S. Bureau of Soils Classification)

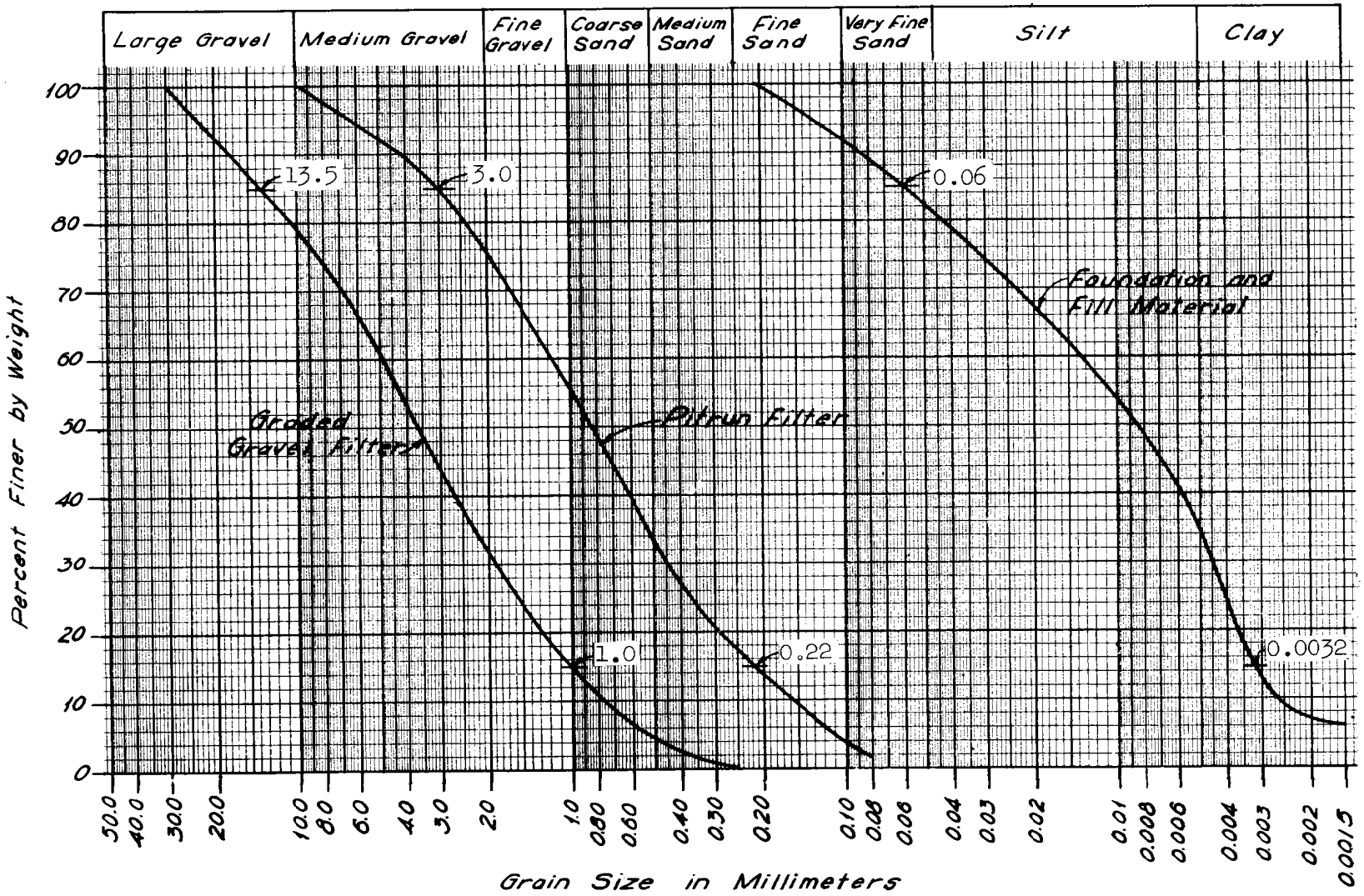

Check Filter Gradation: (See preceding page for grain sizes)

	15 percent size	85 percent size
Graded Gravel	1.0 mm	13.5 mm
Pitrun Sand and Gravel	0.22 mm	3.0 mm
Foundation and Fill Material	0.0032 mm	0.06 mm

Pipe perforations = 1/4 in. diam. = 0.25 • 25.4 = 6.35 mm

$$\frac{\text{85 percent size of gravel}}{\text{diameter of perforations}} = \frac{13.5}{6.35} = 2.13 > 1.0 \quad \text{OK}$$

$$\frac{\text{15 percent size of gravel}}{\text{85 percent size of pitrun}} = \frac{1.0}{3.0} = 0.33 < 4.0 \quad \text{OK}$$

$$\frac{\text{15 percent size of gravel}}{\text{15 percent size of pitrun}} = \frac{1.0}{0.22} = 4.55 > 4.0 \quad \text{OK}$$

$$\frac{\text{15 percent size of pitrun}}{\text{85 percent size of foundation}} = \frac{0.22}{0.06} = 3.67 < 4.0 \quad \text{OK}$$

$$\frac{\text{15 percent size of pitrun}}{\text{15 percent size of foundation}} = \frac{0.22}{0.0032} = 68.8 > 4.0 \quad \text{OK}$$

The 15 percent size of any given material is a unique size for that material such that 15 percent by weight of the material is finer than it. Likewise, the 85 percent size is the size for which 85 percent by weight is finer.

Determine required depth of cutoff wall and toewall: (See Piping, page 4.14)

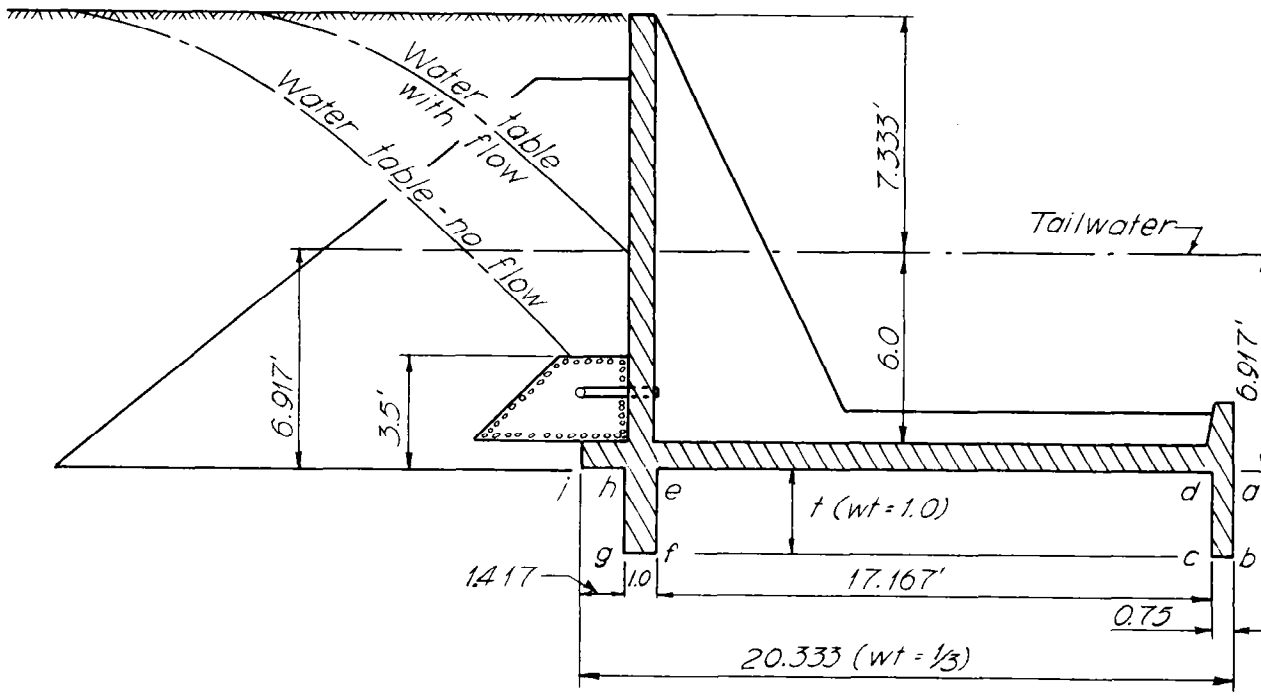

Foundation Material (Firm clay)--20 percent sand, 45 percent silt, 35 percent clay

Wt. Creep Ratio = C_W = 2.3 (See page 4.16)

It is estimated that the drain will lower the water table at the structure, as shown in the above sketch. The maximum differential head occurs during periods of no flow.

Required Wt. Creep Dist. = 2.3 · 3.5 = 8.05 = 4t + (20.33 ÷ 3)

4t = 8.05 − 6.78 = 1.27, t = 0.32, Use minimum of 2'-6"

Actual Wt. Creep Dist. = 4(2.5) + 6.78 = 16.78

Safe differential head = H = 16.78 ÷ 2.3 = 7.30 ft

Compute Uplift (Refer to sketch in foregoing paragraph)

With flow

Uplift = 6.92 · 62.4 = 432 lbs/ft^2
Total Uplift on bay = 432 · 20.33 · 10.28 = 90,300 lbs
Wt. of bay = 163,009 lbs (See base pressures, with flow)
Ratio = Wt. ÷ Uplift = 163,009 ÷ 90,300 = 1.80 OK

No flow

Pressure at point (a) = 0, Pressure at point (i) = 3.5 · 62.4 = 218 lbs/ft^2

Wt. Creep Dist. = 16.78 ft, Increment of pressure = loss per unit of weighted creep dist. = 218 ÷ 16.78 = 13.0 lbs/ft^2

Point	Wt. Creep Dist. ft	Inc. of Pres. lbs/ft^2	Pres. at Point lbs/ft^2	Ave. Pres. between points lbs/ft^2	Base Length ft	Uplift per ft width lbs	Base Width ft	Total Uplift lbs
a			0					
	2.5	32.5						
b			32.5					
	0.25	3.2		34	0.75	26	10.28	267
c			35.7					
	2.5	32.5						
d			68.2					
	5.72	74.4		105	17.17	1802	10.28	18,500
e			142.6					
	2.5	32.5						
f			175.1					
	0.333	4.3		177	1.0	177	10.28	1,820
g			179.4					
	2.5	32.5						
h			211.9					
	0.472	6.1		215	1.42	304	10.28	3,120
i			218.0					
						Total uplift on bay =		23,707

Wt. of bay = 88,959 lbs
Ratio = Wt. ÷ Uplift = 88,959 ÷ 23,707 = 3.75 OK

Determine contact and total pressures on base: Take moments about downstream edge at elevation of bottom of apron of representative bay.

Before fill (No uplift)

Part		Wt.	Arm	Moment
Apron	10.28 · 20.33 · 0.917 · 150	28,700	10.17	292,000
Headwall	10.28 · 13.33 · 0.833 · 150	17,100	18.42	315,000
C. O. Wall	10.28 · 2.5 · 1.0 · 150	3,860	18.42	71,100
C. O. Fillets	10.28 · 0.25 · 150	386	18.42	7,100
Toewall	10.28 · 2.5 · 0.75 · 150	2,890	0.375	1,086
Twl. Fillets	10.28 · 0.125 · 150	193	0.917	177
Trans. Sill	10.28 · 1.33 · 0.875 · 150	1,800	0.440	792
Long. Sill	17.09 · 1.0 · 1.0 · 150	2,560	9.44	24,200
Buttress	12.33 · 3.0 · 1.0 · 150	5,550	16.00	88,800
		63,039	12.69	800,255

$z = 800{,}255 \div 63{,}039 = 12.69$ ft, $e = 12.69 - 10.17 = 2.52$ ft

Area of base $= 10.28 \cdot 20.33 = 209.0$ ft^2

$p = (V \div A)\,[1 \pm (6e \div d)] = (63{,}039 \div 209)\,[1 \pm (6 \cdot 2.52 \div 20.33)]$

$p_u = 302\,(1 + 0.744) = \underline{527 \text{ lbs/ft}^2}$, $p_d = 302\,(1 - 0.744) = \underline{77 \text{ lbs/ft}^2}$

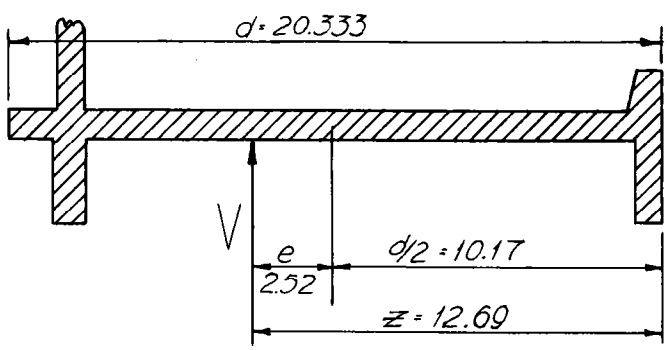

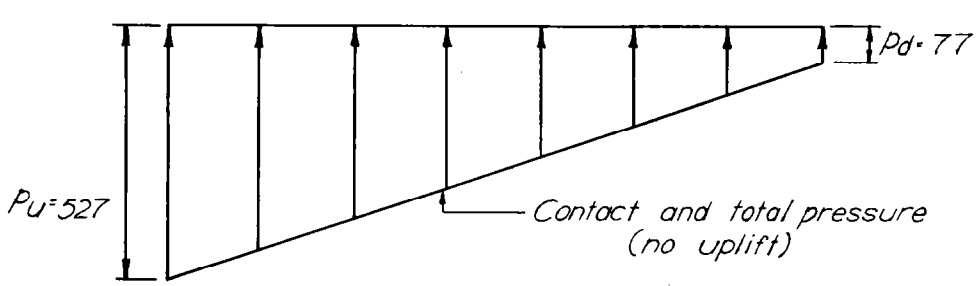

After fill (No flow)

Backfill Properties (upstream from headwall) (compacted, clean pitrun sand and gravel)

Dry wt.		115 lbs/ft^3
Void ratio, e		0.35
Percent voids	$\left(\frac{e}{1+e} \cdot 100\right)$	25.9
Moist wt.		125 lbs/ft^3
ϕ		35° $\left(\frac{1-\sin\phi}{1+\sin\phi}\right) = 0.271$
Cohesion		0

Eff. submerged wt. = $\left[115 - (1 - 0.259)\ 62.4\right] = 69$ lbs/ft^3

Saturated wt. = $115 + (0.259 \cdot 62.4) = 131.2$ lbs/ft^3

For design purposes assume pitrun material to crest elevation.

Resolve Uplift into Trapezoidal Diagram, to simplify calculations.

Rate of change per ft of horizontal contact = $13.0 \div 3 = 4.33$ (See uplift, no flow)

Let x = unit uplift at downstream edge, y = unit uplift at upstream edge

then $y = x + (4.33 \cdot 20.33) = x + 88$

Total uplift per ft width = $23{,}707 \div 10.28 = 2305$ lbs

$$\left[(x + y) \div 2\right] d = 2305 \text{ lbs}$$

$$(x + x + 88) \div 2 = 2305 \div 20.33 = 113 \text{ lbs/ft}^2$$

$$x = 113 - 44 = 69 \text{ lbs/ft}^2$$

$$y = 69 + 88 = 157 \text{ lbs/ft}^2$$

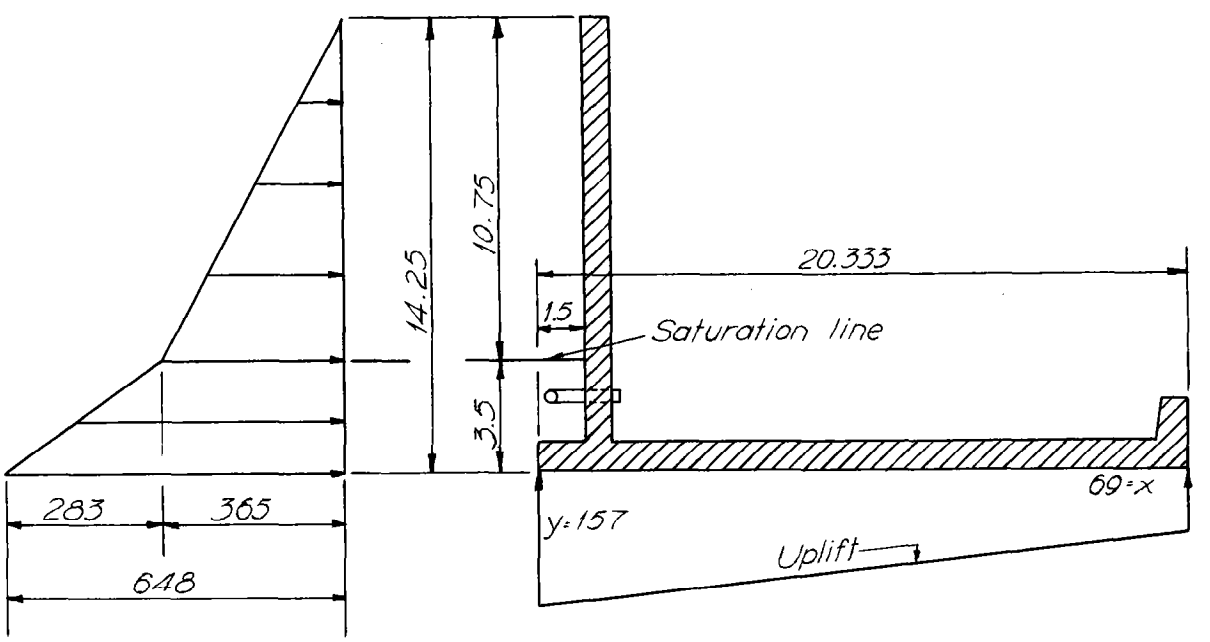

Determine horizontal pressures

At 10.75 ft depth

Vert. wt. = 10.75 • 125 = 1345 lbs
Unit equiv. fluid pres. = vert. wt. $(1 - \sin \phi \div 1 + \sin \phi)$
$p = 1345\ (0.271) = 365\ \text{lbs/ft}^2$

At 14.25 ft depth

Vert. wt. (earth) = 1345 + (3.5 • 69) = 1345 + 242 = 1587 lbs
Unit equiv. fluid pres. = 1587 (0.271) = 430 lbs/ft^2
Water pres. = 3.5 • 62.4 = 218 lbs/ft^2
$p = 430 + 218 = 648\ \text{lbs/ft}^2$

Part	Force	Wt.	Arm	Moment
Concrete		63,039	12.69	800,255
Moist sand	10.28 • 10.75 • 1.5 • 125 =	20,700	19.58	405,500
Sat. sand	10.28 • 2.58 • 1.5 • 131 =	5,220	19.58	102,300
Hor. Pres.	10.28 • 0.5 • 365 • 10.75 = −20,200	—	7.08	−143,000
Hor. Pres.	10.28 • 365 • 3.5 = −13,130	—	1.75	− 23,000
Hor. Pres.	10.28 • 0.5 • 283 • 3.5 = − 5,100	—	1.17	− 5,950
	−38,430	88,959		1,136,105
Uplift ▭	10.28 • 69 • 20.33	−14,400	10.17	−146,300
Uplift ◺	10.28 • 0.5 • 88 • 20.33	− 9,200	13.55	−124,700
		−23,600		−271,000
		+65,359	13.23	+865,105

z = 865,105 ÷ 65,359 = 13.23 ft
e = 13.23 − 10.17 = 3.06 ft

Contact Pressures

$p_u = (65{,}359 \div 209)\ \left[1 + (6 \cdot 3.06 \div 20.33)\right]$

$p_u = 313\ (1 + 0.905) = 596\ \text{lbs/ft}^2$

$p_d = 313\ (1 - 0.905) = 30\ \text{lbs/ft}^2$ OK Positive pressures

Total Pressures

$p_{tu} = 596 + 157 = 753\ \text{lbs/ft}^2$

$p_{td} = 30 + 69 = 99\ \text{lbs/ft}^2$

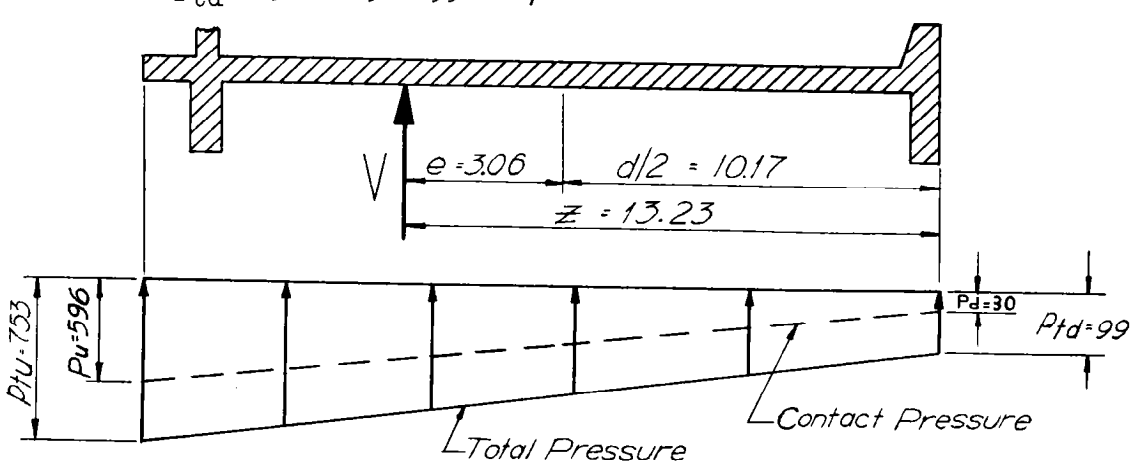

With flow (Design Discharge)

Depth of headwater above crest, use 3.5 ft
Depth of tailwater above bottom of apron = 6.92 ft
Uplift is uniform = 432 lbs/ft^2

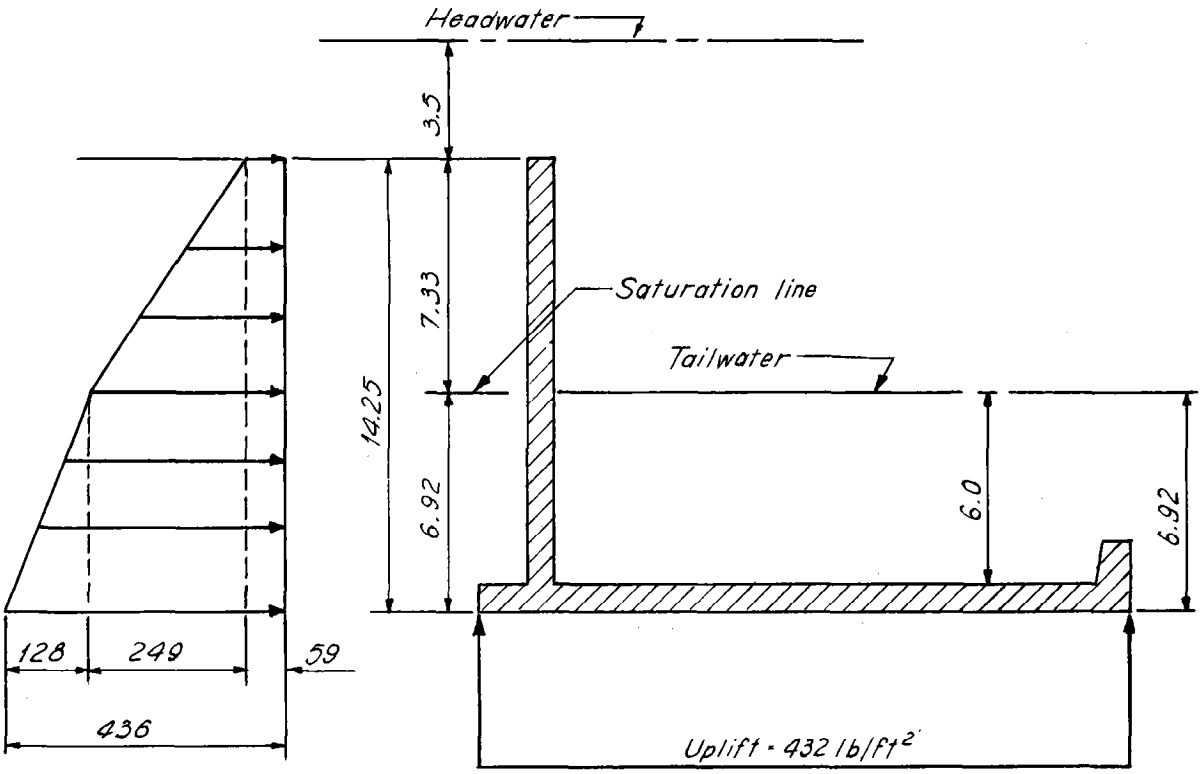

Determine Horizontal Pressures

At Crest (surcharge of headwater)

Vert. Wt. = 3.5 · 62.4 = 218 lbs, p = 218 · 0.271 = 59 lbs/ft^2

At 7.33 ft depth

Vert Wt. = 218 + 125 · 7.33 = 218 + 916 = 1134 lbs

p = 1134 · 0.271 = 308 lbs/ft^2

At 14.25 ft depth

Vert. Wt. = 1134 + 6.92 · 69 = 1134 + 477 = 1611 lbs

p = 1611 · 0.271 = 436 lbs/ft^2

NOTE: Water pressures in both directions are equal and cancel one another.

Part		Force	Wt.	Arm	Moment
Concrete			63,039		800,255
Moist Sand	10.28 · 7.33 · 1.5 · 125		14,150	19.58	277,000
Satur. Sand	10.28 · 6.92 · 1.5 · 131		13,980	19.58	274,000
H_2O on Foot.	10.28 · 3.5 · 1.5 · 62.4		3,370	19.58	66,000
H_2O on Apron	9.28 · 6.0 · 17.25 · 62.4		59,900	9.38	562,000
H_2O on T. S.	10.28 · 4.67 · 0.75 · 62.4		2,250	0.375	843
H_2O on Butt.	1.0 · 2.5 · 2.43 · 62.4		379	12.81	4,850
H_2O on L. S.	1.0 · 11.25 · 5.0 · 62.4		3,510	6.38	22,400
Hor. Pres.	10.28 · 59 · 14.25	8,650	—	7.13	− 61,600
Hor. Pres.	10.28 · 0.5 · 249 · 7.33	9,390	—	9.36	− 87,900
Hor. Pres.	10.28 · 249 · 6.92	17,700	—	3.46	− 61,300
Hor. Pres.	10.28 · 0.5 · 128 · 6.92	4,550	—	2.31	− 10,500
		40,290	+160,578		+1,786,048
Uplift	10.28 · 432 · 20.33		− 90,300	10.17	− 918,000
			+ 70,278	12.36	+ 868,048

$$z = 868{,}048 \div 70{,}278 = 12.36 \text{ ft}, \quad e = 12.36 - 10.17 = 2.19 \text{ ft}$$

$$p_u = (70{,}278 \div 209)\left[1 + (6 \cdot 2.19 \div 20.33)\right]$$

$$p_u = 336\ (1 + 0.646) = 553 \text{ lbs/ft}^2$$

$$p_d = 336\ (1 - 0.646) = 119 \text{ lbs/ft}^2$$

$$p_{tu} = 553 + 432 = 985 \text{ lbs/ft}^2$$

$$p_{td} = 119 + 432 = 551 \text{ lbs/ft}^2$$

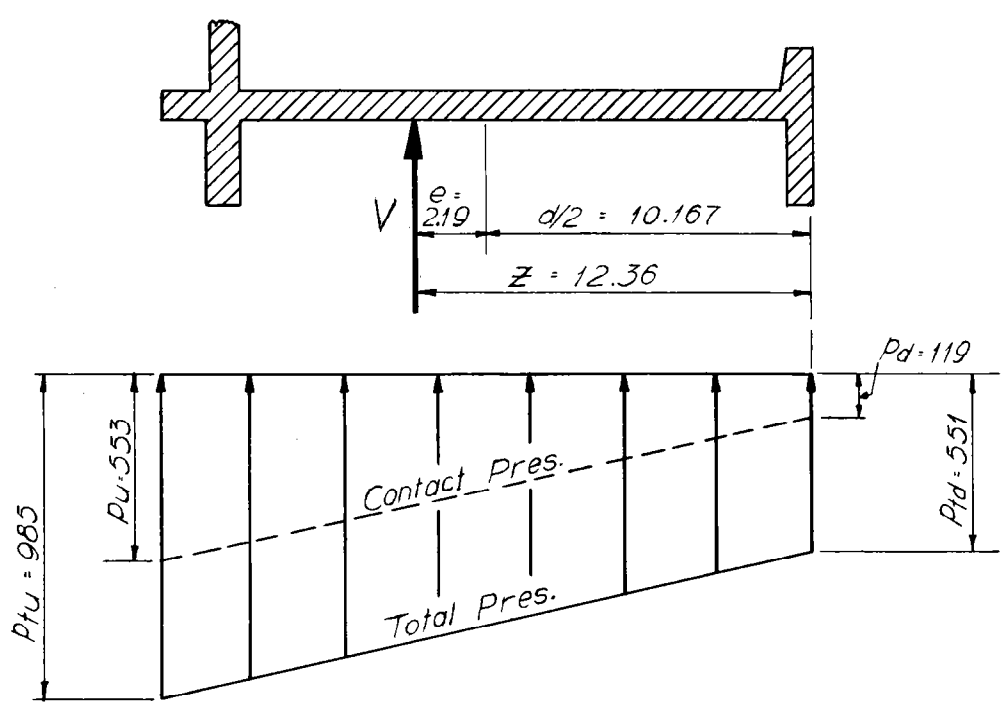

Check Sliding: Assume plane of sliding at elevation of bottom of cutoffs. Neglect passive resistance in front of toewall.

Properties of foundation material (Undisturbed and saturated)

Angle of internal friction, $\phi = 12^{\circ}$, $\left(\frac{1 - \sin \phi}{1 + \sin \phi}\right) = 0.655$

Friction coefficient = $\tan \phi = 0.213 = f$
Void ratio = 0.65
Effective submerged wt. = 62.2 lbs/ft^3
Cohesion, c = 500 lbs/ft^2 for sliding

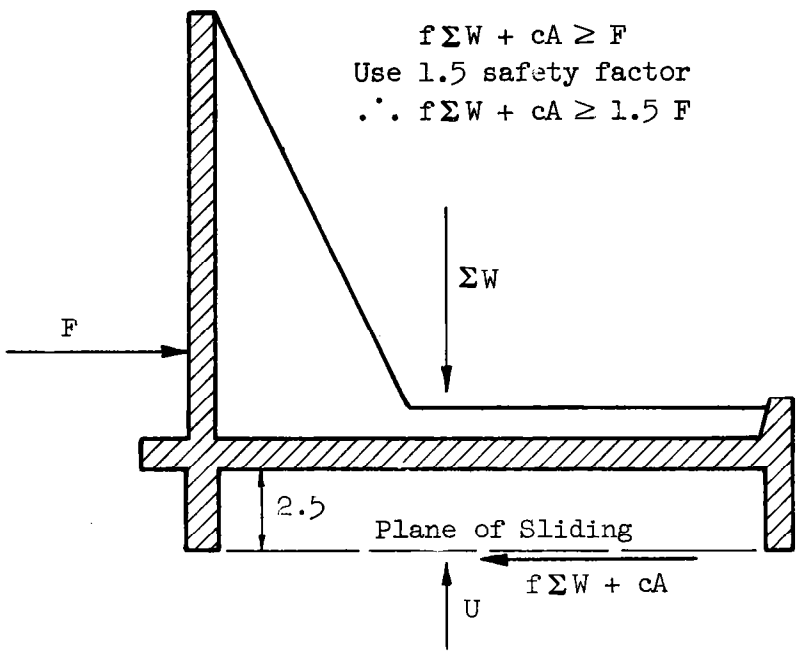

No flow

Eff. wt. of soil between cutoffs = 2.5 · 10.28 · 17.17 · 62.2 = 27,500 lbs
Wt. of bay minus uplift (See base pressures) = 65,359 lbs
ΣW = 92,859 lbs

Area of sliding plane, A = 17.17 · 10.28 = 176.5 ft^2
$\therefore f\Sigma W + cA$ = (0.213 · 92,859) + (500 · 176.5) = 108,000 lbs

Determine F (See contact pressure calculation for horizontal forces from crest to bottom of apron, pages 6.10 and 6.11.)

At 14.25 ft depth (just below apron)

Vert. wt. = 1587 lbs
p = 1587 · 0.655 = 1040 lbs/ft^2

At 16.75 ft depth

Vert. wt. = 1587 + (2.5 · 62.2) = 1587 + 155 = 1742 lbs
p = 1742 · 0.655 = 1140 lbs/ft^2

$$F = 10.28 \left[(365 \cdot 0.5 \cdot 10.75) + (1013 \cdot 0.5 \cdot 3.5) + (2180 \cdot 0.5 \cdot 2.5)\right]$$

$$F = 10.28\ (1960 + 1770 + 2720)$$

$$F = 10.28 \cdot 6450 = 66{,}300 \text{ lbs}$$

$$1.5F = 99{,}450 \text{ lbs}$$

<u>OK Safe from sliding</u>

$$\frac{f\Sigma W + cA}{F} = \frac{108{,}000}{66{,}300} = 1.63 > 1.5$$

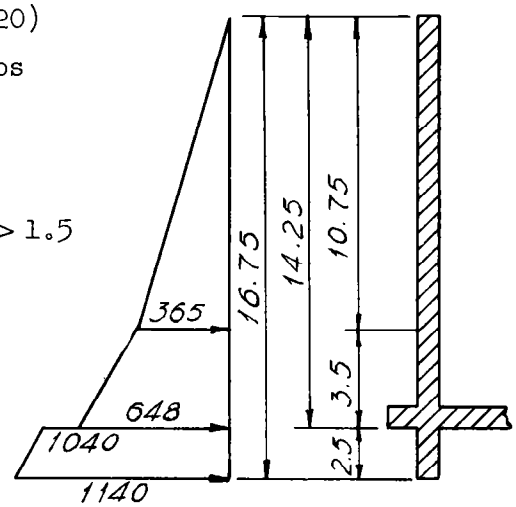

<u>With flow</u> (Design discharge)

Eff. wt. of soil = 27,500 lbs
Wt. of bay − uplift = 70,278 lbs
ΣW = 97,778 lbs

$$f\Sigma W + cA = 0.212\ (97{,}778) + 500\ (1765) = 20{,}720 + 88{,}250 = 108{,}270$$

<u>Determine F</u> (See contact pressure calculations, page 6.12 and 6.13)

<u>At 14.25 ft depth</u> (just below apron)

Vert wt. = 1611 lbs, $p = 1611 \cdot 0.655 = 1055 \text{ lbs/ft}^2$

<u>At 16.75 ft depth</u>

Vert. wt. = 1611 + 155 = 1766 lbs, $p = 1766 \cdot 0.655 = 1157 \text{ lbs/ft}^2$

$$F = 10.28 \left[(367 \cdot 0.5 \cdot 7.33) + (744 \cdot 0.5 \cdot 6.92) + (2212 \cdot 0.5 \cdot 2.5)\right]$$

$$F = 10.28\ (1345 + 2575 + 2765)$$

$$F = 10.28 \cdot 6685 = 68{,}700 \text{ lbs}$$

$$1.5F = 103{,}050 \text{ lbs}$$

<u>OK Safe from sliding</u>

$$\frac{f\Sigma W + cA}{F} = \frac{108{,}270}{68{,}700} = 1.58 > 1.5$$

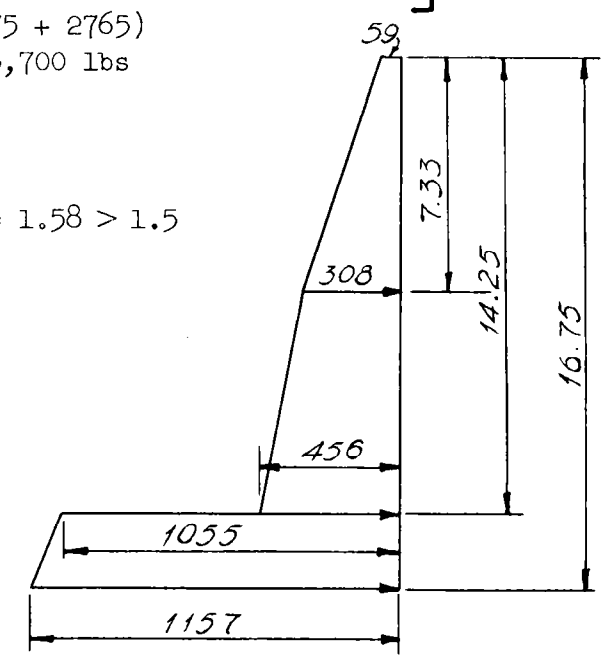

Headwall Design: The headwall will be designed as a slab with fixed sides and bottom and a free top (see ES-6, Engineering Handbook, Section 6). To use this reference, it is necessary to resolve the actual load diagram into a triangular load diagram. This is done by making the cantilever moment at the base of the headwall equal for both load diagrams. The maximum load will occur with the design flow over the structure. (See load computed to determine contact pressures.)

Determine Equivalent Hydrostatic Pressure (w) for Triangular Load Diagram. (See actual load computed to determine contact pressures)

At 13.33 ft depth

Vert. wt. = 1134 + 6 (69) = 1134 + 414 = 1548 lbs

$p = 1548\ (0.271) = 420\ \text{lbs/ft}^2$

Taking Moments about base of headwall

Force	Arm	M
59 · 13.33 = 787	6.67	5,250
249 · 0.5 · 7.33 = 912	8.44	7,700
249 · 6.0 = 1494	3.0	4,482
112 · 0.5 · 6.0 = 336	2.0	672
	M =	18,104

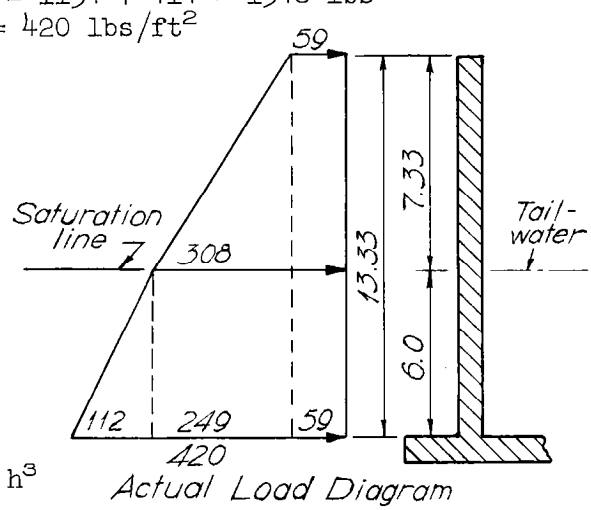

For Triangular Load Diagram

$M = wh^3 \div 6$ or $w = 6M \div h^3$

$w = 6\ (18{,}104) \div (13.33)^3$

$w = 45.9\ \text{lbs/ft}^3$ Use $46.0\ \text{lbs/ft}^3$

Slab Design (with two buttresses) (Class B Concrete)

b = 30.83 ÷ 3 = 10.28 ft, a = 13.33 ft, b/a = 0.77

Check minimum wall thickness of 10 in (d = 7.5 in)

$M_{max} = -\ 0.025 \cdot 46 \cdot (13.33)^3 = 2730$ ft lbs (see ES-6, sheet 1)

Req'd. d = 3.8 in OK (See ES-45, Engr. Hbk., Sec. 6)

$V_{max} = 0.27 \cdot 46 \cdot (13.33)^2 = 2210$ lbs

Req'd. d < 3.0 in OK (See ES-51, Engr. Hbk., Sec. 6)

Vertical Steel (Unexposed face) d = 10 − 2.5 = 7.5 in

$-M_x = 0.025 \cdot 109{,}300 = 2730$ ft lbs, $A_s = 0.235$ (from ES-45)

$V = 0.197 \cdot 8190 = 1610$ lbs, $\Sigma_o < 1.0$ (from ES-44, Sec. 6)

Use No. 5 at 15 ($A_s = 0.25$, $\Sigma_o = 1.57$) (See ES-46, Sec. 6)

Find where No. 4 at 15 ($A_s = 0.16$) can be used

Allowable M = 1900 ft lbs (from ES-45)

Allowable $-C_m = 1900 \div 109{,}300 = 0.0174$ which corresponds to a point (2.3 ÷ 40) 13.33 = 0.77 ft above top of apron. (See M_x moment curves)

∴ No. 5 bars may be cut 0.77 + 1.0 = 1.77 ft. above apron and will extend into cutoff wall. Length of No. 5 bars 1.77 + 0.92 + 2.5 − 0.25 = 4.94 ft.

Use 5'-0" and extend bars 1'-10" above apron

Set No. 4 bars on construction joint

Length = (13'-4") − (0'-4") − (0'-3") = 12'-9"

SHEAR AND MOMENT COEFFICIENTS

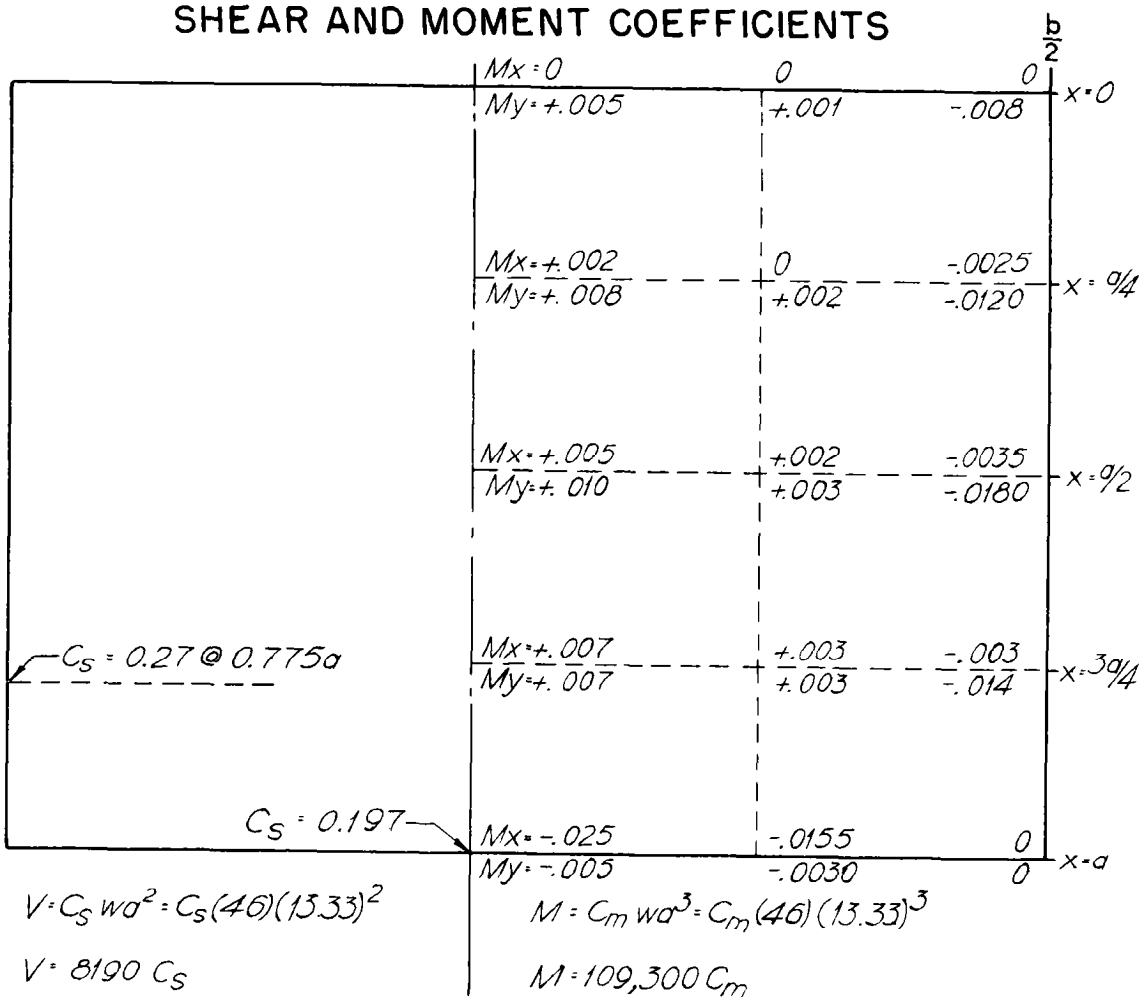

Horizontal Steel (Unexposed face) d = 10 − 2.0 − 5/8 − 1/4 = 7 1/8"

$-M_y = 0.018 \cdot 109{,}300 = 1970$ ft lbs, Req'd. $A_s = 0.18$ in^2

$V = 0.27 \cdot 8190 = 2210$ lbs, Req'd. $\Sigma_o = 1.2$ in

Use No. 4 at 12 Splice at center line of structure and extend into headwall extension stub.

HEADWALL MOMENT COEFFICIENT CURVES

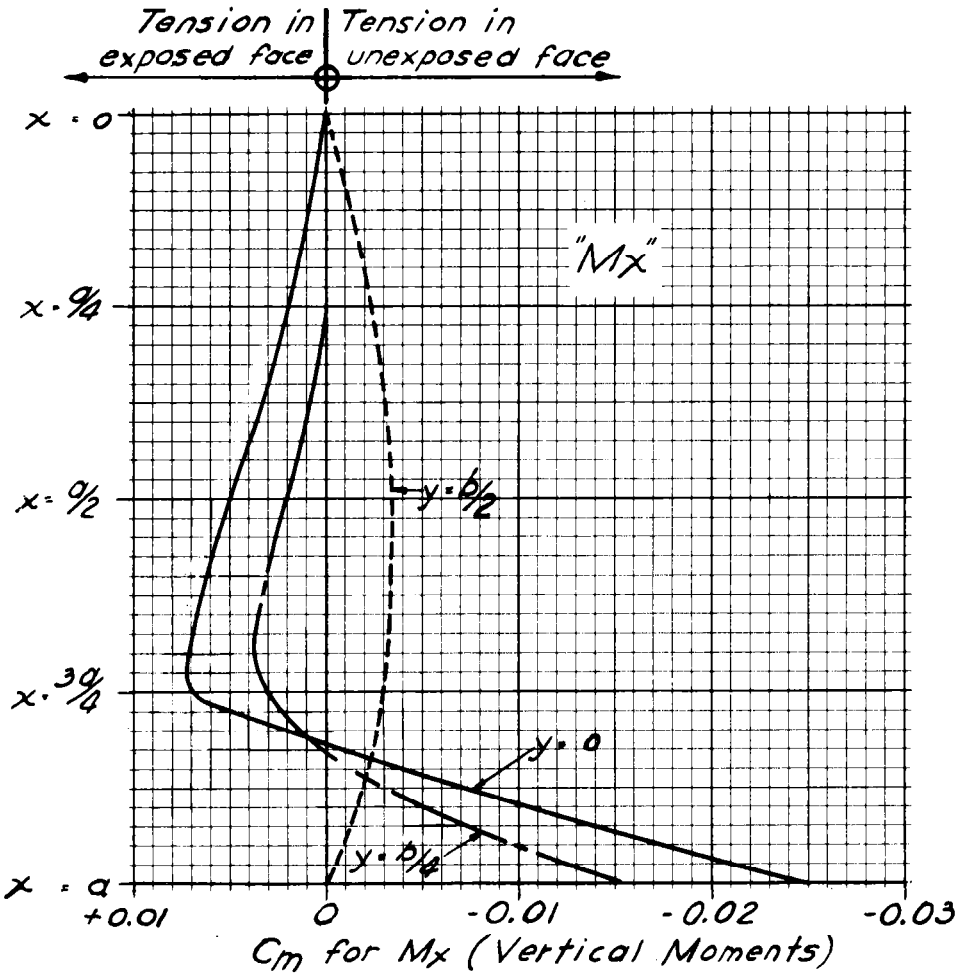

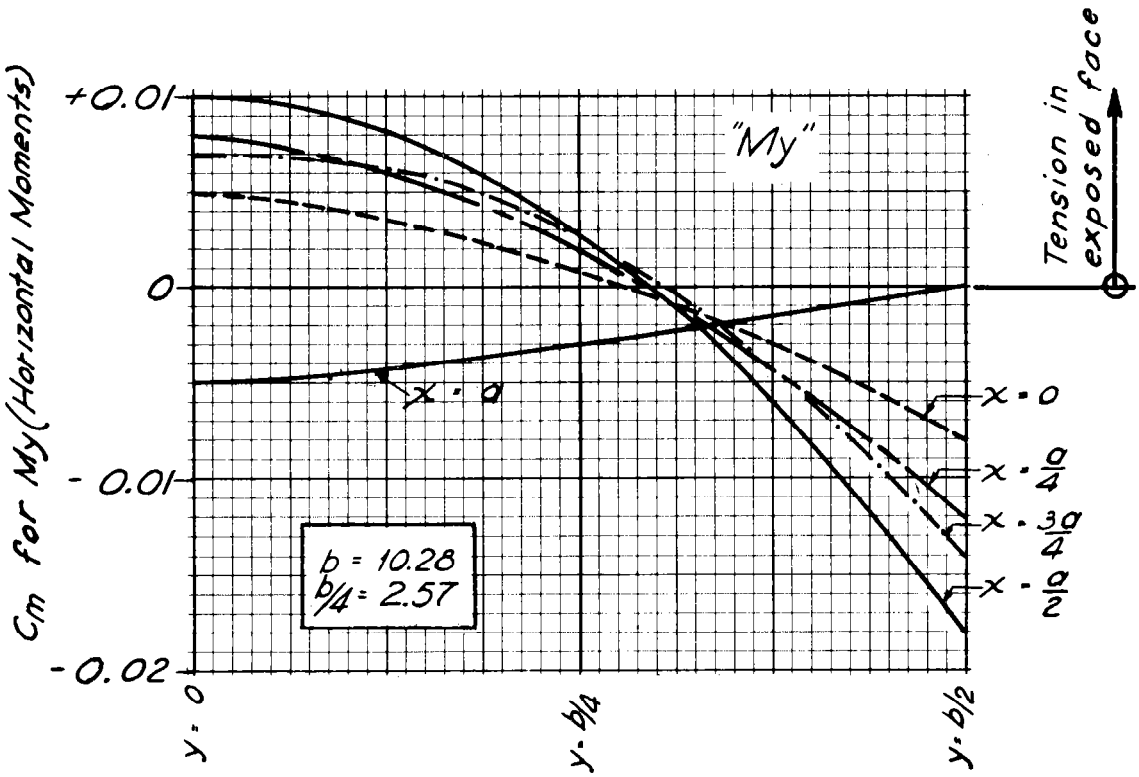

Horizontal Steel (Exposed face) d = 7 1/2 in

$+ M_y = 0.01 \cdot 109{,}300 = 1093$ ft lbs, Req'd. $A_s < 0.10$ in^2

Use No. 5 at 15 ($A_s = 0.25$) to meet temp. requirements. Splice at center line of structure and extend into headwall extension stub.

Vertical Steel (Exposed face) d = 10 − 2 − 1/2 − 1/4 = 7 1/4 in

$+ M_x = 0.0075 \cdot 109{,}300 = 820$ ft lbs, Req'd. $A_s < 0.10$ in^2

Use No. 4 at 15 ($A_s = 0.16$) Min. for 10 in. wall. Extend into cutoff wall and cut 1'-7" above top of apron. Length of bars = 4'-9". Lap on No. 4 set on construction joint. Length = 12'-9"

Sidewall Design: The sidewall is designed as vertical and horizontal beams divided as shown in the sketch below by the 45° line.

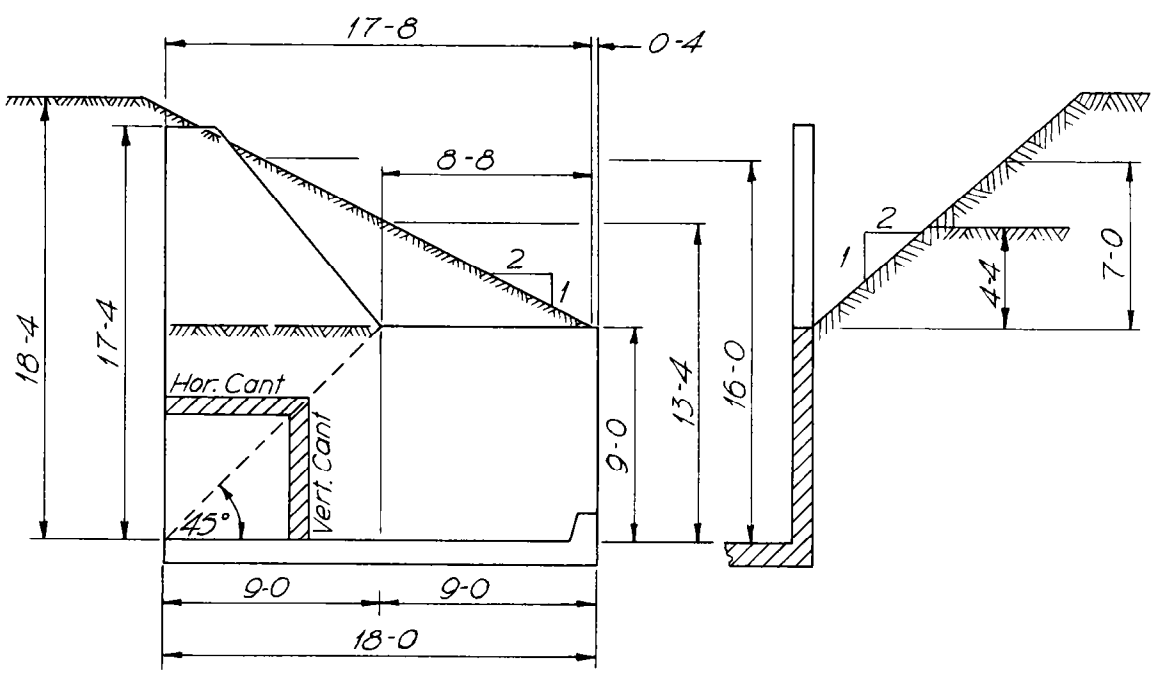

Backfill Properties (Compacted)

Dry wt.	=	100 lbs/ft^3	specific gravity of solids = 2.65
Void ratio (e)	=	0.65	
Percent voids	=	39.4	
Moist wt.	=	110 lbs/ft^3	
Percent moisture	=	10	
ϕ (moist)	=	25° $\left(\frac{1 - \sin \phi}{1 + \sin \phi}\right) = 0.406$	
Cohesion (c)	=	consider as 0	

Equivalent fluid pressure on vertical cantilever section

Maximum ht. of surcharge on 2 to 1 slope = 4.33 ft
$w = 70$ lbs/ft^3 (See graphical solution)

Equivalent fluid pressures on horizontal cantilever section

Assumed average ht. of surcharge on 2 to 1 slope = 7.0 ft
$w = 78$ lbs/ft^3 (See graphical solution)

Vertical Steel (Unexposed face) $d = 10 - 2.5 = 7.5$ in

Use ES-4 $M = 121.5 \cdot 70 = 8505$ ft lbs, Req'd. $A_s = 0.77$ in^2
$V = 40.5 \cdot 70 = 2835$ lbs, Req'd. $\Sigma_o = 1.46$ in

Use No. 7 at 9 ($A_s = 0.80$, $\Sigma_o = 3.67$)
Find where No. 4 at 9 ($A_s = 0.26$) can be used
Allowable $M = 3010$ ft lbs (from ES-45)
$3010 \div 70 = 43.2$; (from ES-4, EH, Sec. 6) distance from top of wall to point where No. 4 at 9 will carry moment = 6'-3" which corresponds to point 2'-9" above top of apron. Length of vertical leg of No. 7 at 9 = 2.75 + 1.00 + 0.67 = 4.42 ft (Use 4'-6")

Horizontal Steel (Unexposed face) $d = 10 - 2 - 7/8 - 1/2 = 6\ 5/8$ in

Find points of maximum shear and moments

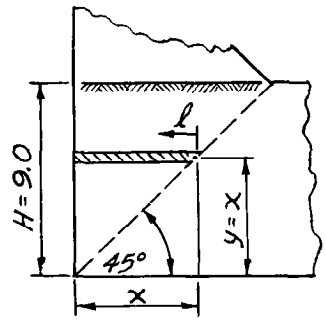

$$V = w\,(H - x)\,x\ ;\ \frac{dV}{dx} = H - 2x = 0$$

$$\therefore\ x = \frac{H}{2}$$

$$V_{max} = 78\ (4.5)\ 4.5 = 1580 \text{ lbs}$$

$$M = w\,(H - x)\,\frac{x^2}{2}\ ;\ \frac{dM}{dx} = Hx - \frac{3}{2}x^2 = 0$$

$$\therefore\ x = \frac{2}{3}H$$

$$M_{max} = 78\ (3)\ \frac{36}{2} = 4210 \text{ ft lbs}$$

Req'd. $A_s = 0.42$ in^2, Req'd. $\Sigma_o < 1.0$ in

Use No. 7 at 15 ($A_s = 0.48$, $\Sigma_o = 2.20$)

Find where No. 4 at 15 ($A_s = 0.16$) is sufficient

$M = 1660$ ft lbs (from ES-45, EH, Sec. 6)

$$M = w\,(H - x)\,\frac{\ell^2}{2}\ ;\ 1660 = 78 \cdot 3\ (\ell^2 \div 2);$$

$$\ell^2 = \frac{1660 \cdot 2}{78 \cdot 3} = 14.2 \text{ ft}^2$$

$\ell = 3.77$ ft which corresponds to a point $6 - 3.77 = 2.23$ ft from downstream face of headwall.

Length of leg of bar = (2'-3") + (1'-0") + (0'-7 1/2")
= 3'-10 1/2 in. (Use 4'-0")

Steel in Exposed Face

Horizontal Steel--Use No. 5 at 15 (temp. steel) place nearer face.
Vertical Steel--Use No. 4 at 15 (tie steel)

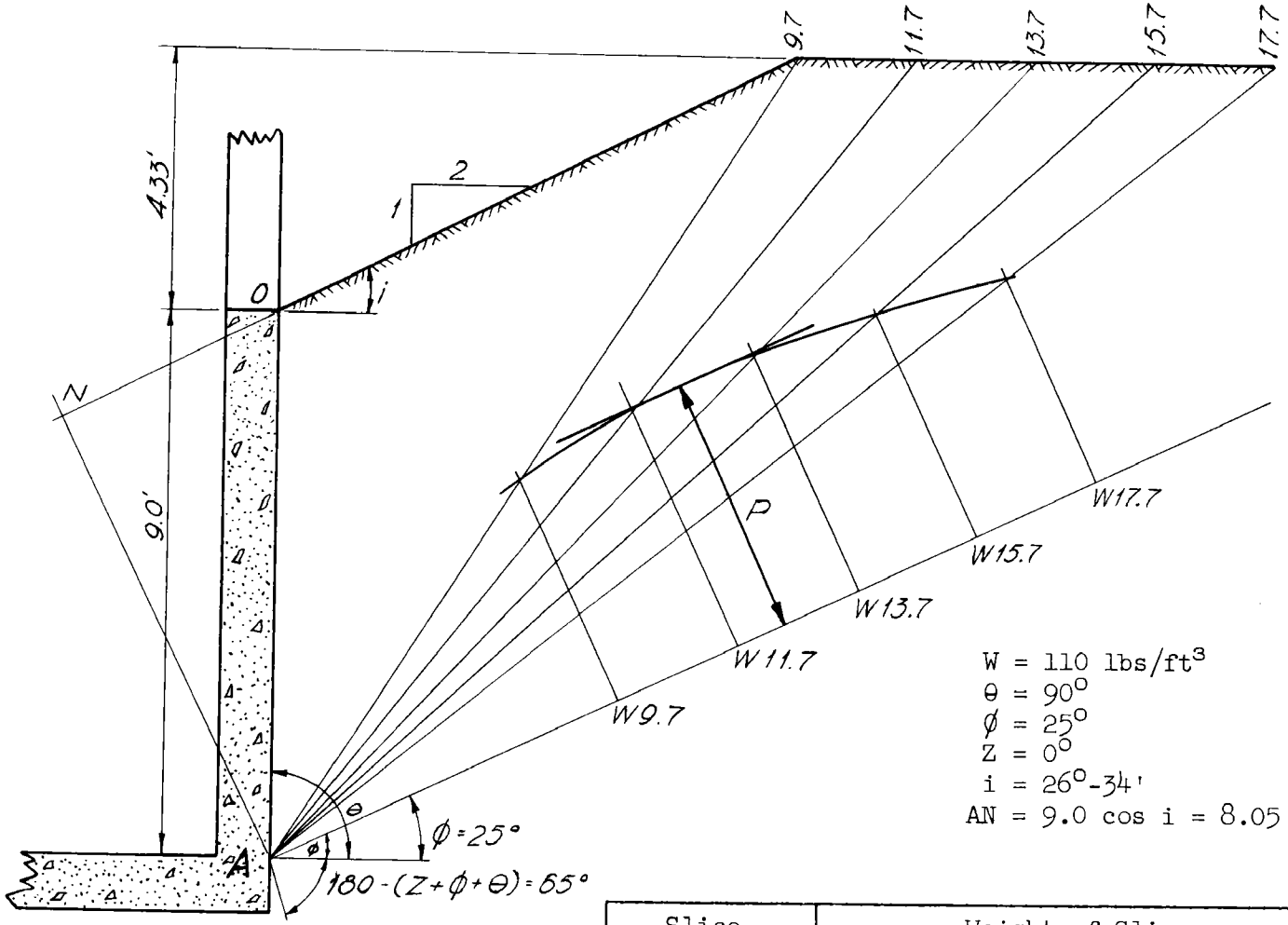

W = 110 lbs/ft^3
$\theta = 90^\circ$
$\phi = 25^\circ$
$Z = 0^\circ$
$i = 26^\circ\text{-}34'$
AN = 9.0 cos i = 8.05

$P = 2870 \text{ lbs} = \frac{wH^2}{2}$

$w = \frac{5740}{(9)^2} = 70.9 \text{ lbs/ft}^3$

Use 70.0 lbs/ft^3

Slice	Weight of Slice	Acc Wt
A-0-9.7	8.05 • 0.5 9.7 • 110 = 4,290	4,290
A-9.7-11.7	13.33 • 1.0 • 110 = 1,467	5,757
A-11.7-13.7	13.33 • 1.0 • 110 = 1,467	7,224
A-13.7-15.7	13.33 • 1.0 • 110 = 1,467	8,691
A-15.7-17.7	13.33 • 1.0 • 110 = 1,467	10,158

See Paragraph 2.2.2 of Structural Design

Load on horizontal cantilever section

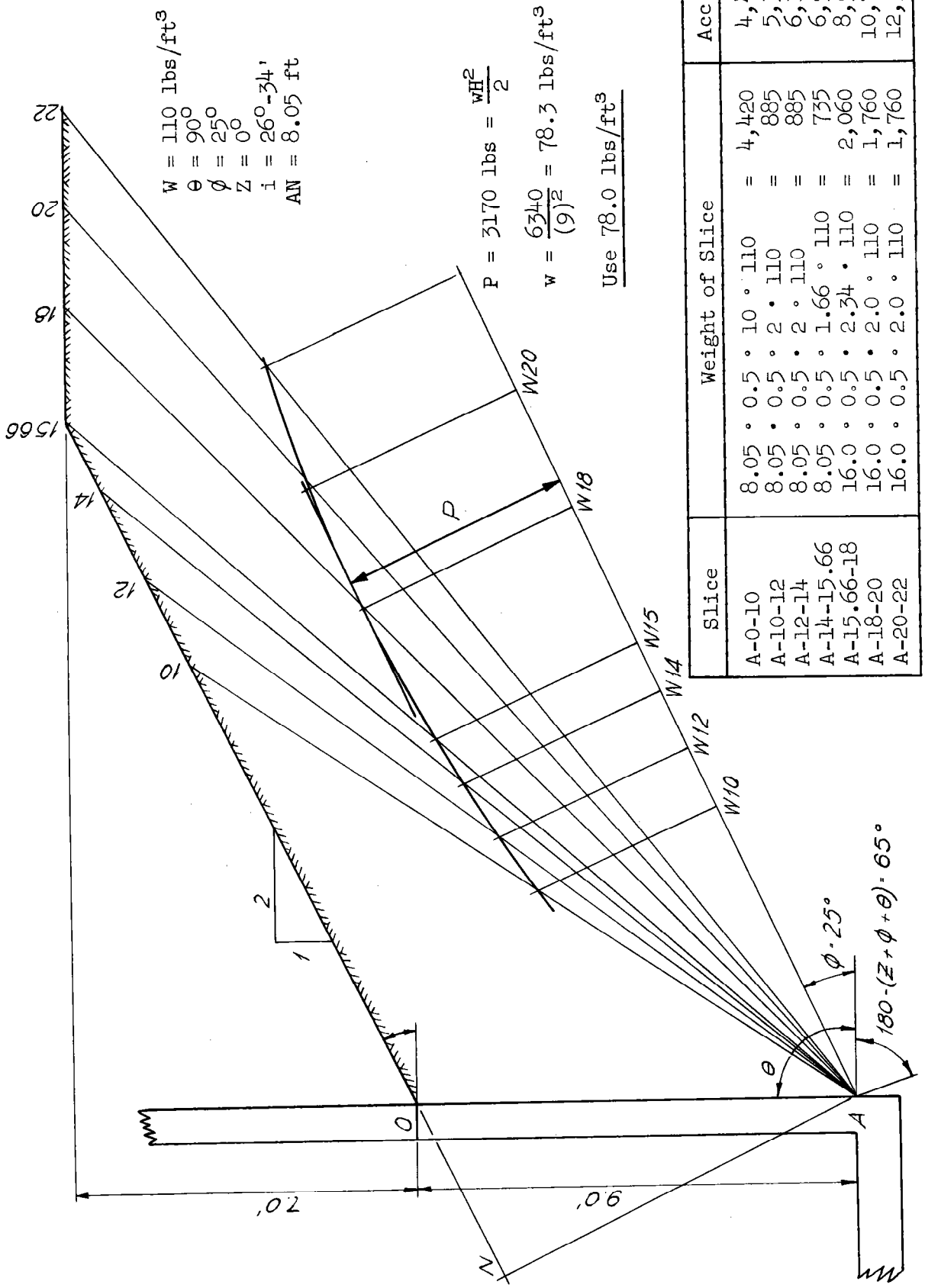

Slice	Weight of Slice		Acc Wt
A-0-10	8.05 · 0.5 · 10 · 110	= 4,420	4,420
A-10-12	8.05 · 0.5 · 2 · 110	= 885	5,305
A-12-14	8.05 · 0.5 · 2 · 110	= 885	6,190
A-14-15.66	8.05 · 0.5 · 1.66 · 110	= 735	6,925
A-15.66-18	16.0 · 0.5 · 2.34 · 110	= 2,060	8,985
A-18-20	16.0 · 0.5 · 2.0 · 110	= 1,760	10,745
A-20-22	16.0 · 0.5 · 2.0 · 110	= 1,760	12,505

Apron Design: The apron will be designed as a series of beams in the transverse direction, considered restrained at the sidewalls and continuous over the longitudinal sills. The apron will be designed for the following loading conditions: (1) before backfill has been placed, (2) after backfill has been placed with no flow, (3) after backfill has been placed with design flow.

Upward Total Pressures on Base

(See determination of contact and total pressures)

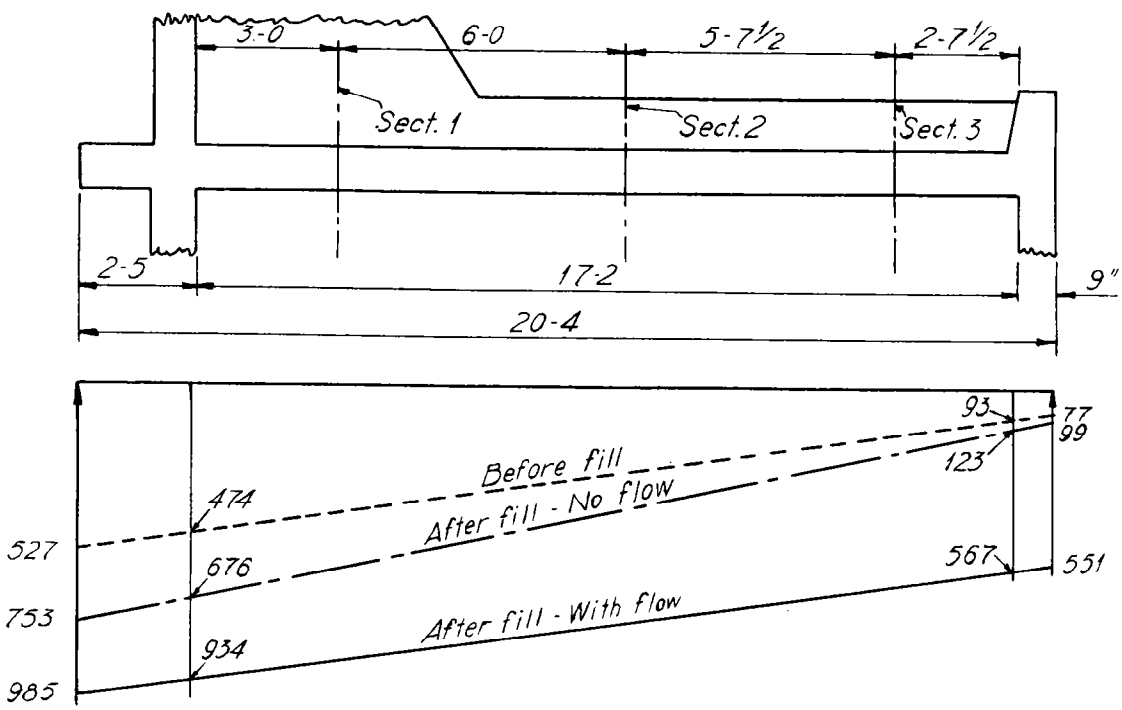

Net Loads on Apron (Total Pressure less wt. of concrete and H_2O)

Wt. of concrete/ft^2 of apron = 11/12 · 150 = 138 lbs

Wt. of H_2O on apron/ft^2 = 62.4 · 6.0 = 375 lbs

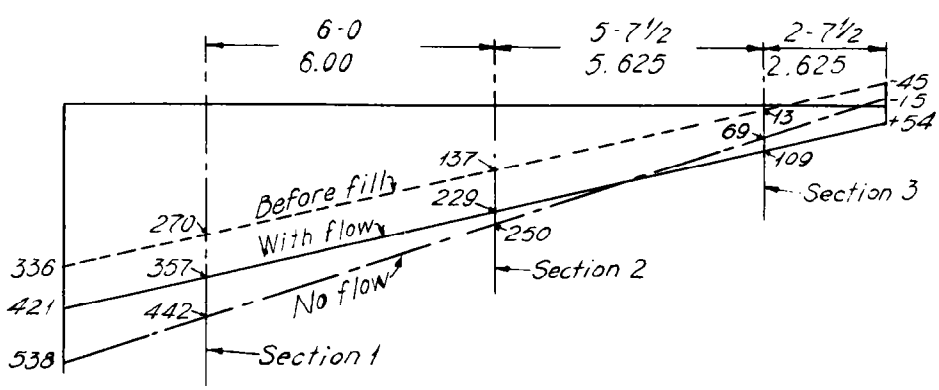

Due to the wide variation in loads across the apron, the apron was divided into three approximately equal parts. The stress analysis will be made at the mid-sections of these parts at Sections 1, 2, and 3.

At Section 1

Before fill $\ell = 30.83 \div 3 = 10.28$ ft, $\ell^2 = 105.7$ ft^2

Sidewall Moment, $M_{ab} = 0$

Load on apron, $w = 270$ lbs/ft^2

$M_{ba} = \frac{1}{10} w\ell^2 = 27 \cdot 105.7 = 2850$ ft lbs (See ES-56, page 4.27

$V_{ab} = -\frac{1}{2} w\ell + \frac{1}{\ell}(M_{ab} + M_{ba}) = -(135 \cdot 10.28) + (2850 \div 10.28)$

$V_{ab} = -1388 + 277 = -1111$ lbs

$V_{ba} = w\ell + V_{ab} = 2776 - 1111 = +1665$ lbs

$V_{bc} = -\frac{1}{2} w\ell = -1388$ lbs

$R_a = 1111$ lbs (down)

$R_b = 1665 + 1388 = 3053$ lbs (down)

After fill--No flow $w = 442$ lbs/ft^2

Sidewall Moment, $= -M_{ab}$ (at ℄ of apron)

$M_{ab} = -\frac{6 \cdot 70 \cdot (3.42)^2}{2} - \frac{3.42 \cdot 70\ (3.42)^2}{6}$

$M_{ab} = -2460 - 467 = -2927$ ft lbs

$M_{ba} = \frac{1}{5} M_{ab} + \frac{1}{10} w\ell^2$

$M_{ba} = -585 + 44.2\ (105.7) = -585 + 4670 = +4085$ ft lbs

$V_{ab} = -\frac{1}{2} w\ell + \frac{1}{\ell}(M_{ab} + M_{ba}) = -(221 \cdot 10.28) + \frac{1}{10.28}(-2927 + 4085)$

$V_{ab} = -2270 + 113 = -2157$ lbs

$V_{ba} = w\ell + V_{ab} = 4540 - 2157 = +2383$ lbs

$V_{bc} = -\frac{1}{2} w\ell = -2270$ lbs

$R_a = 2157$ lbs (down)

$R_b = 2383 + 2270 = 4653$ lbs (down)

After fill--With flow $w = 357$ lbs/ft^2

$M_{ab} = -2927 + (3 \cdot 62.4 \cdot 3 \cdot 1.92) + (3 \cdot 62.4 \cdot 1.5 \cdot 1.42)$

$M_{ab} = -2927 + 1078 + 399 = -1450$ ft lbs

$M_{ba} = (-1450 \div 5) + (35.7 \cdot 105.7)$

$M_{ba} = -290 + 3770 = +3480$ ft lbs

$V_{ab} = (-178 \cdot 10.28) + \frac{1}{10.28}(-1450 + 3470)$

$V_{ab} = -1830 + 196 = -1634$ lbs

APRON DESIGN (Section 1)

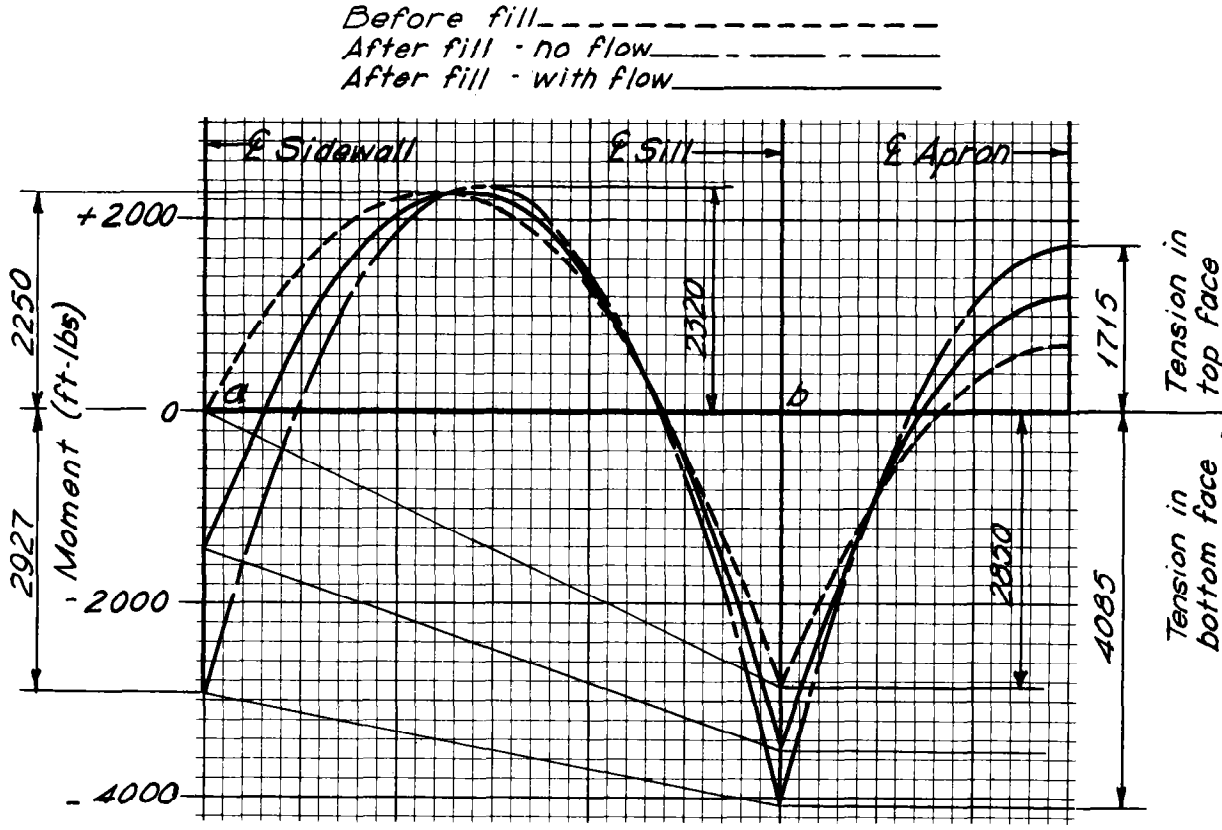

MOMENT DIAGRAMS

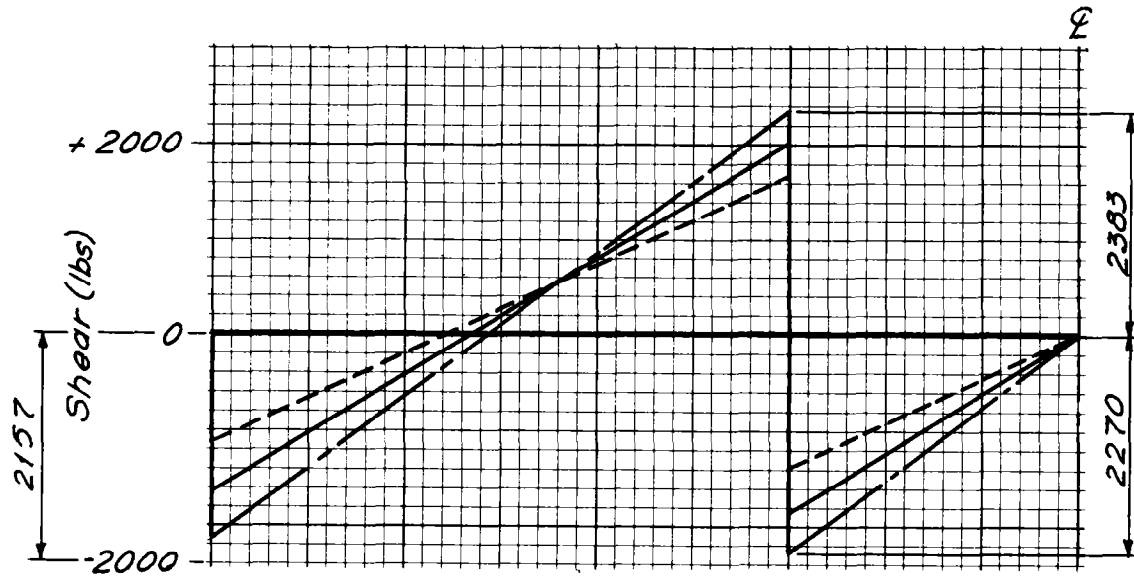

SHEAR DIAGRAMS

$V_{ba} = w\ell + V_{ab} = 3670 - 1634 = 2036$ lbs

$V_{bc} = -\frac{1}{2} w\ell = -1830$ lbs

$R_a = 1634$ lbs (down)

$R_b = 2036 + 1830 = 3866$ lbs (down)

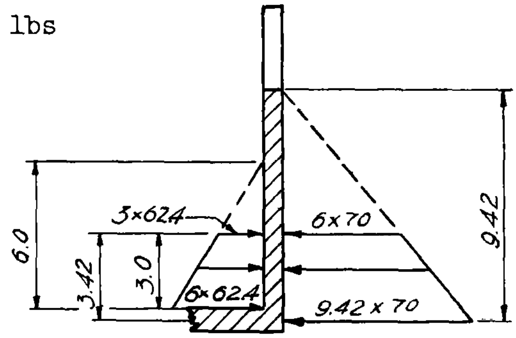

Simple Moments

$M_{℄} = \frac{1}{8} w\ell^2 = \frac{1}{8} w (10.28)^2 = 13.2 w$

	$\frac{M_x}{M_{℄}}$	Before fill w = 270	No flow w = 442	With flow w = 357
at ℄	1.0	3560	5830	4710
at 0.4ℓ	0.96	3420	5600	4520
at 0.3ℓ	0.84	2990	4900	3960
at 0.2ℓ	0.64	2280	3730	3020
at 0.1ℓ	0.36	1280	2100	1700

In determining the steel requirements, the horizontal compression thrust in the apron due to the load on the sidewall will be taken into account. (See ES-45, EH, Sec. 6)

Magnitudes of Horizontal Compression Thrust (N)

Before fill, N = 0

After fill--No flow, $N = \left(\frac{(6 \cdot 70) + (9.42 \cdot 70)}{2}\right) 3.42 = 1850$ lbs

After fill--With flow, $N = 1850 - (4.5 \cdot 62.4 \cdot 3.0)$
$N = 1850 - 842 = 1008$ lbs

At Section 2

Before fill $\ell = 10.28$ ft, $\ell^2 = 105.7$ ft^2

Sidewall Moment, $M_{ab} = 0$

Load on apron = 137 lbs/ft^2

$M_{ba} = \frac{1}{10} w\ell^2 = 13.7 \cdot 105.7 = 1450$ ft lbs

$V_{ab} = -\frac{1}{2} w\ell + \frac{1}{\ell}(M_{ab} + M_{ba}) = -\frac{1}{2} \cdot 137 \cdot 10.28 + (1450 \div 10.28)$

$V_{ab} = -704 + 141 = -563$ lbs

$V_{ba} = w\ell + V_{ab} = 1408 - 563 = +845$ lbs

$V_{bc} = -\frac{1}{2} w\ell = -704$ lbs

$R_a = 563$ lbs (down)

$R_b = 704 + 845 = 1549$ lbs (down)

APRON DESIGN (Section 2)

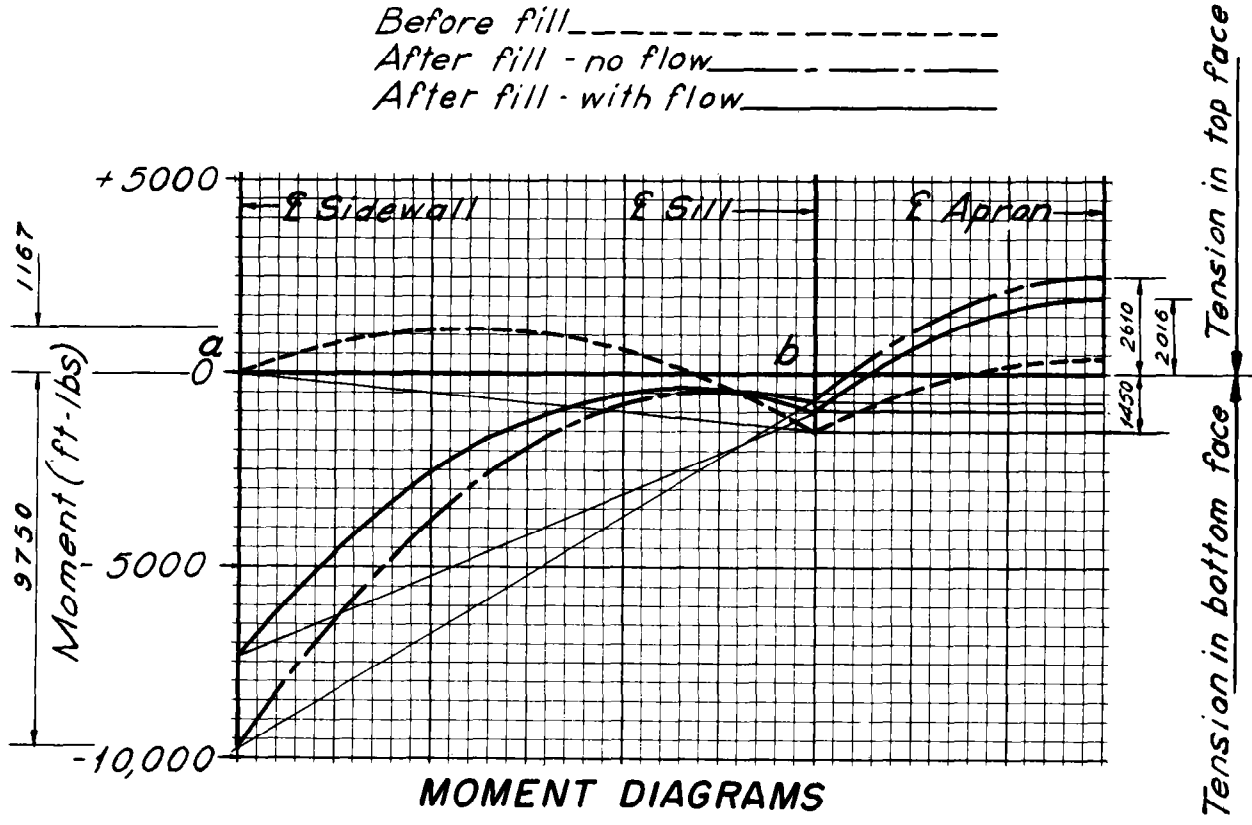

MOMENT DIAGRAMS

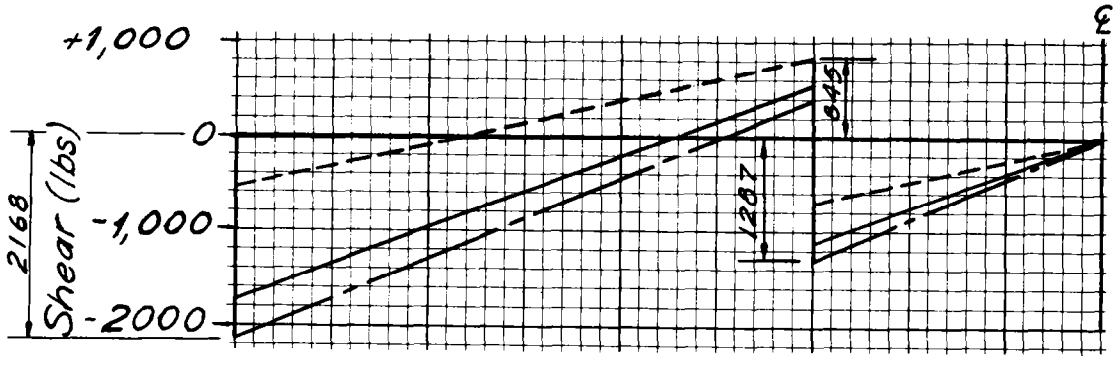

SHEAR DIAGRAMS

After fill--Now flow $w = 250 \text{ lbs/ft}^2$

$$M_{ab} = -\frac{w\ell^3}{6} = -\frac{70\ (9.42)^3}{6} = -9750 \text{ ft lbs (at ℄ apron)}$$

$$M_{ba} = \frac{1}{5} M_{ab} + \frac{1}{10} w\ell^2$$

$$M_{ba} = -1950 + (25 \cdot 105.7) = -1950 + 2640 = +690 \text{ ft lbs}$$

$$V_{ab} = -\frac{1}{2} w\ell + \frac{1}{\ell}(M_{ab} + M_{ba}) = (-125 \cdot 10.28) + \frac{1}{10.28}(-9750 + 690)$$

$$V_{ab} = -1287 - 881 = -2168 \text{ lbs}$$

$$V_{ba} = w\ell + V_{ab} = 2573 - 2168 = +405 \text{ lbs}$$

$$V_{bc} = -\frac{1}{2} w\ell = -1287 \text{ lbs}$$

$$R_a = 2168 \text{ lbs (down)}$$

$$R_b = 405 + 1287 = 1692 \text{ lbs (down)}$$

After fill-- With flow $w = 229 \text{ lbs/ft}^2$

$$M_{ab} = -9750 + \frac{62.4\ (6)^2}{2} \cdot 2.42 = -9750 + 2720 = -7030 \text{ ft lbs}$$

$$M_{ba} = \frac{1}{5}(-7030) + \frac{1}{10}(229)(105.7) = -1406 + 2420 = +1014 \text{ ft lbs}$$

$$V_{ab} = -\frac{1}{2} w\ell + \frac{1}{\ell}(M_{ab} + M_{ba}) = -\frac{1}{2}(229)(10.28) + \frac{1}{10.28}(-7030 + 1014)$$

$$V_{ab} = -1177 - 585 = -1762 \text{ lbs}$$

$$V_{ba} = w\ell + V_{ab} = 2354 - 1762 = +592 \text{ lbs}$$

$$V_{bc} = -\frac{1}{2} w\ell = -1177 \text{ lbs}$$

$$R_a = 1762 \text{ lbs (down)}$$

$$R_b = 592 + 1177 = 1769 \text{ lbs (down)}$$

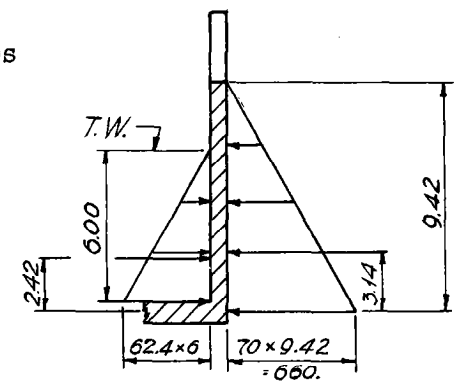

Simple Moments

$$M_{℄} = \frac{1}{8} w\ell^2 = 13.2\ w$$

	$\frac{M_x}{M_{℄}}$	Before fill w = 137	No flow w = 250	With flow w = 229
at ℄	1.0	1820	3300	3030
at 0.4ℓ	0.96	1747	3165	2910
at 0.3ℓ	0.84	1530	2770	2540
at 0.2ℓ	0.64	1166	2110	1940
at 0.1ℓ	0.36	655	1190	1090

Magnitude of Horizontal Compression Thrust (N)

Before fill, $N = 0$

After fill--No flow, $N = \frac{70 \cdot (9.42)^2}{2} = 3100 \text{ lbs}$

After fill--With flow, $N = 3100 - \frac{62.4\ (6)^2}{2} = 3100 - 1120$

$$N = 1980 \text{ lbs}$$

<u>At Section 3</u> $\ell = 10.28$ ft, $\ell^2 = 105.7$ ft^2

<u>Before fill</u>

Sidewall Moment = $M_{ab} = 0$

Load on apron = 13 lbs/ft^2

$$M_{ba} = \frac{1}{10} w\ell^2 = 1.3\ (105.7) = 138 \text{ ft lbs}$$

$$V_{ab} = -\frac{1}{2} w\ell + \frac{1}{\ell}(M_{ab} + M_{ba}) = -\frac{1}{2}(13)(10.28) + \frac{1}{10.28}(138)$$

$$V_{ab} = -67 + 13 = -54 \text{ lbs}$$

$$V_{ba} = w\ell + V_{ab} = 134 - 54 = +80 \text{ lbs}$$

$$V_{bc} = -\frac{1}{2} w\ell = -67 \text{ lbs}$$

R_a = 54 lbs (down)

R_b = 80 + 67 = 147 lbs (down)

<u>After fill--No flow</u> $w = 69$ lbs/ft^2

M_{ab} = − 9750 ft lbs (Same as Section 2)

$$M_{ba} = \frac{1}{5} M_{ab} + \frac{1}{10} w\ell^2 = -1950 + 730 = -1220 \text{ ft lbs}$$

$$V_{ab} = -\frac{1}{2} w\ell + \frac{1}{\ell}(M_{ab} + M_{ba}) = -\frac{1}{2}(69)(10.28) + \frac{1}{10.28}(-9750 - 1220)$$

$$V_{ab} = -354 - 1068 = -1422 \text{ lbs}$$

$$V_{ba} = w\ell + V_{ab} = 708 - 1422 = -714 \text{ lbs}$$

$$V_{bc} = -\frac{1}{2} w\ell = -354 \text{ lbs}$$

R_a = 1422 lbs (down)

R_b = 714 − 354 = 360 lbs <u>(up)</u>

<u>After fill--With flow</u> $w = 109$ lbs/ft^2

M_{ab} = − 7030 ft lbs (Same as Section 2)

$$M_{ba} = \frac{1}{5} M_{ab} + \frac{1}{10} w\ell^2 = -1406 + 1152 = -254 \text{ ft lbs}$$

$$V_{ab} = -\frac{1}{2} w\ell + \frac{1}{\ell}(M_{ab} + M_{ba}) = -\frac{1}{2}(109)(10.28) + \frac{1}{10.28}(-7030 - 254)$$

$$V_{ab} = -560 - 709 = -1269 \text{ lbs}$$

$$V_{ba} = w\ell + V_{ab} = 1120 - 1269 = -149 \text{ lbs}$$

$$V_{bc} = -\frac{1}{2} w\ell = -560 \text{ lbs}$$

R_a = 1269 lbs (down)

R_b = 560 − 149 = 411 lbs (down)

APRON DESIGN (Section 3)

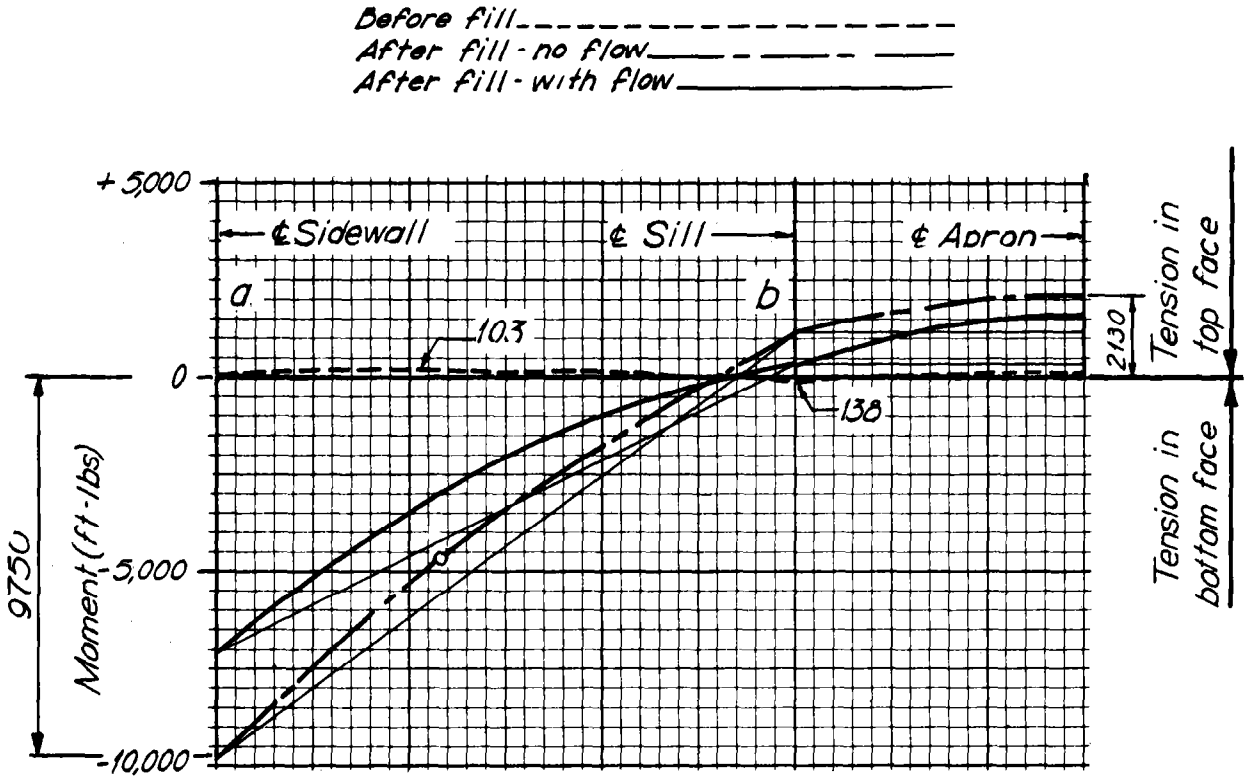

MOMENT DIAGRAMS

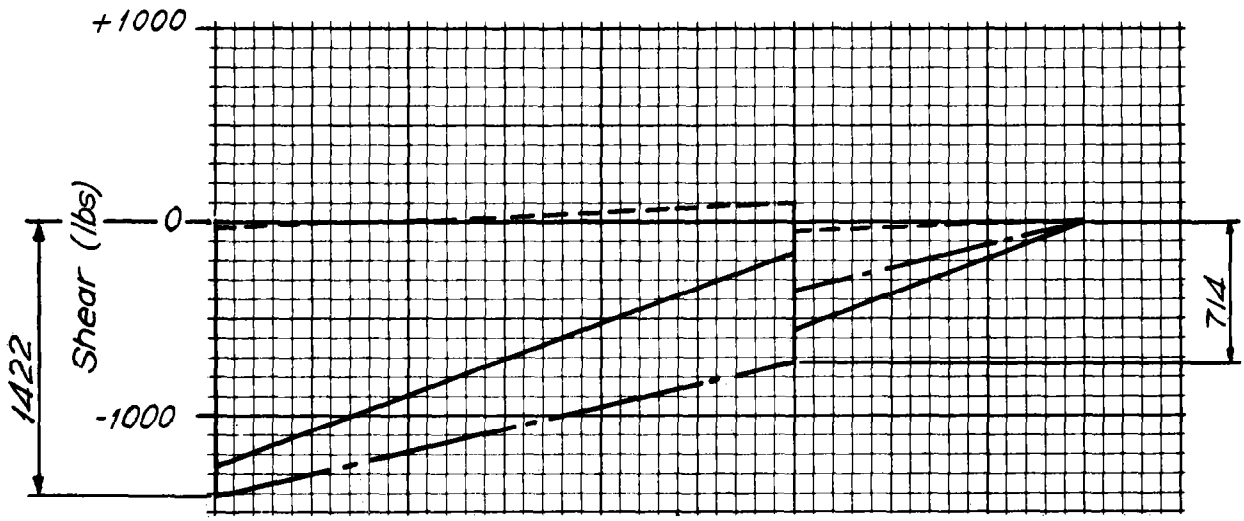

SHEAR DIAGRAMS

Simple Moments

$M_{℄} = \frac{1}{8} w\ell^2 = 13.2\ w$

	$\frac{M_x}{M_{℄}}$	Before fill w = 13	No flow w = 69	With flow w = 109
at ℄	1.0	172	910	1440
at 0.4ℓ	0.96	165	873	1380
at 0.3ℓ	0.84	145	765	1210
at 0.2ℓ	0.64	110	582	920
at 0.1ℓ	0.36	62	328	518

Values of N are the same for Sections 2 and 3

Steel Requirements: Because of nature of design assumptions and to facilitate the placing of the steel during construction, the apron will be reinforced the same at all sections and will be designed to meet the maximum stress requirement in any section.

Bottom Steel (Transverse) $d = 11 - 3\ 1/2 = 7\ 1/2$ in

At Sidewall

$M = 9750$ ft lbs (Sections 2 and 3, No flow governs)
$V = 2168$ lbs, $N = 3100$ lbs
$M_s = M + (Nd'' \div 12)$(See ES-45, EH, Sec. 6) $d'' = 6 - 3.5 = 2.5$ in
$M_s = 9750 + (3100 \cdot 2.5 \div 12) = 9750 + 646 = 10{,}396$ ft lbs
$A = 0.94$ in^2 (See ES-45)

Req'd. $A_s = A - (N \div f_s) = 0.94 - (3.1 \div 20) = 0.94 - 0.16 = 0.78$ in^2
Req'd. $\Sigma_o = 1.11$ in (See ES-44, EH, Sec. 6)
Use steel from sidewall--No. 7 at 9 ($A_s = 0.80$, $\Sigma_o = 3.67$)

At Sill

$M = 4085$ ft lbs--(Section 1, No flow governs)
$V = 2383$ lbs, $N = 1850$ lbs
$M_s = M + (Nd'' \div 12) = 4085 + (1850 \cdot 2.5 \div 12)$
$M_s = 4085 + 385 = 4470$ ft lbs
$A = 0.39$ in^2 (ES-45)

Req'd. $A_s = A - (N \div f_s) = 0.39 - (1.85 \div 20) = 0.39 - 0.09 = 0.30$ in^2
Req'd. $\Sigma_o = 1.21$ in (ES-44)

Use No. 5 at 12 ($A_s = 0.31$, $\Sigma_o = 1.96$)

Find where No. 5 at 12 ($A_s = 0.31$) can be used in end spans.
(Section 3, No flow governs) $N = 3100$ lbs

$A = A_s + (N \div f_s) = 0.31 + (3.1 \div 20) = 0.31 \div 0.16 = 0.47$ in^2
$M_s = 5330$ ft lbs (ES-45)
$M = M_s - (Nd'' \div 12) = 5330 - (3100 \cdot 2.5 \div 12)$

M = 5330 − 662 = 4668 ft lbs which corresponds to a point
11.5/30 · 10.28 = 3.94 ft from the ℄ of sidewall

Length of horizontal legs of No. 7 bar

3.94 = distance from ℄ sidewall to theoretical cutoff point
+0.25 = distance from ℄ sidewall to back of bar
+1.00 = for contingencies
5.19' total (Use 5'-3")

Length of No. 5 bars = (31'-4") − 2 (5'-3") + 2 (1'-7") (lap) = 24'-0"

Top Steel (Transverse) d = 10 − 2.5 = 7.5 in

End Span

M_s = M = 2250 ft lbs (Section 1, Before fill governs as N = 0)
A_s = A = 0.192 in^2
V = 1450 lbs (Section 1, No flow governs)
$\Sigma_o < 1.0$ in

Center Span

M = 2610 ft lbs (Section 2, No flow governs) N = 3100
M_s = M + (Nd" ÷ 12) = 2610 + 646 = 3256 ft lbs
A = 0.281, A_s = A − (N ÷ f_s) = 0.281 − 0.15 = 0.13 in^2
Use No. 4 at 12 (A_s = 0.20, Σ_o = 1.57) Length = 31'-0"

Longitudinal Steel

Bottom Face

Temp. steel--Use No. 4 at 15, Length = 21'-0", horizontal leg = 20'-0", vertical leg = 1'-0" in downstream face of toewall

Top Face

Temp. steel--Use No. 5 at 12, Length = 20'-6", horizontal leg = 19'-6", vertical leg = 1'-0" in upstream face of toewall

Buttress Design: The buttress will be designed as a vertical cantilever beam for a load equal to the sum of the shears from the adjacent headwall slabs as explained on page 4.26.

Determine Load (See Headwall Design, page 6.16)

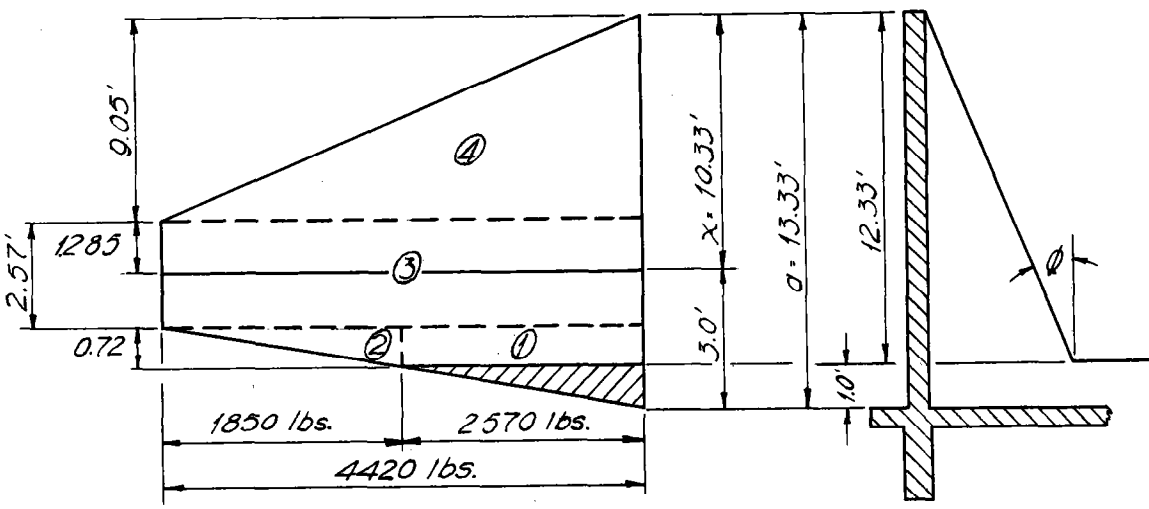

From Headwall Design

$V_{max} = 0.27 \cdot 8190 = 2210$ lbs/ft (from one side only)

Max. load on buttress = $2 \cdot 2210 = 4420$ lbs/ft (both sides)

$x = 0.775\ a = 0.775 \cdot 13.33 = 10.33$ ft

$b/4 = 10.28 \div 4 = 2.57$ ft, $b/8 = 1.285$ ft

Load at top of sill elevation = $(1.0 \div 1.72)\ 4420 = 2570$ lbs

Determine cantilever M and V at top of sill elevation

	Force			Arm	Moment
1	$0.72 \cdot 2570$	=	1,850	0.36	665
2	$0.72 \cdot 0.5 \cdot 1850$	=	666	0.48	319
3	$2.57 \cdot 4420$	=	11,360	2.0	22,720
4	$9.05 \cdot 0.5 \cdot 4420$	=	20,000	7.30	146,000
			33,876		169,704

V = 33,876 lbs

M = 169,704 ft lbs

Determine base width of buttress

Shear V = 33,876 lbs, b = 12

$v = V \div bjd \quad \therefore\ d = V \div bjv$

For Class B Concrete

$v = 90$ lbs/in^2, $j = 0.875$, $k = 0.375$, $f_c = 1200$ lbs/in^2

From ES-51, EH, Sec. 6, d = 36 in

Moment M = 169,704 ft lbs = $2.37 \cdot 10^6$ in lbs

$M_c = f_c bkjd^2/2$

$$d = \sqrt{\frac{2M_c}{f_c bkj}} = \sqrt{\frac{2 \cdot 2.37 \cdot 10^6}{1.2 \cdot 10^3 \cdot 12 \cdot 0.375 \cdot 0.875}} = 29.4 \text{ in}$$

Shear governs

Required base width = 36 − 7.5 = 28.5 in

A 6'-0" base width will be used for the following reasons: (1) to reduce the span length of the longitudinal sills, (2) to allow room for an aeration hole through the buttress at a higher elevation, (3) to reduce steel area requirement and thus facilitate placement of tension steel for buttress.

Steel Requirements

For cantilever moment

A_s = M (in ft kips) ÷ ad, a = 1.44 (for Class B)

d = (6 · 12) + 7.5 = 79.5 in

$A_s = 169.7 \div (1.44 \cdot 79.5) = 1.48$ in^2

Use 2 No. 8 bars ($A_s = 1.57$) in unexposed face of headwall.

In both faces of buttress

Use Temp. steel requirement

No. 5 at 12 (both faces, both directions)

Compute compressive stresses in buttress

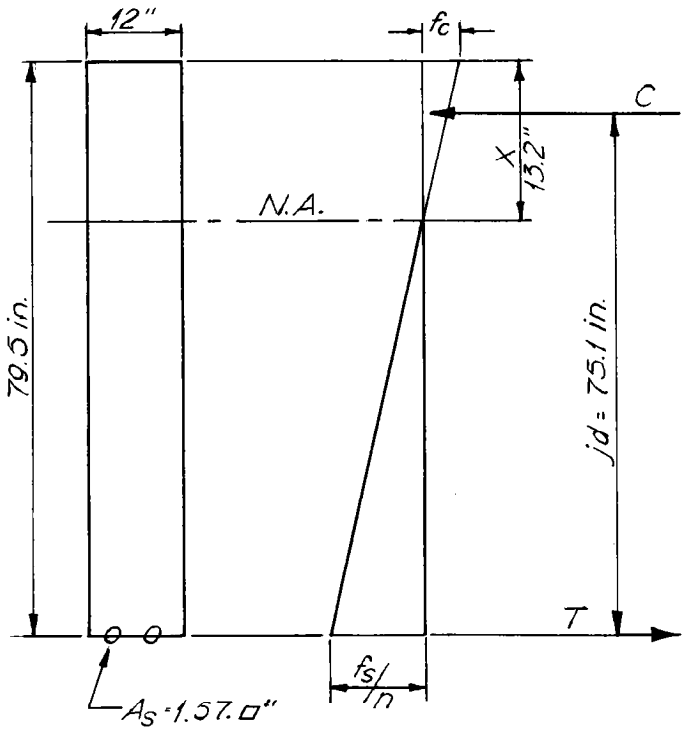

Locate neutral axis--Try x = 10

$$
\begin{array}{rcrcrcr}
10 \cdot 12 & = & 120 & \cdot & 5 & = & 600 \\
1.57 \cdot 10 & = & \underline{15.7} & \cdot & 79.5 & = & \underline{1250} \\
 & & 135.7 & & & &)1850(13.64 \\
3.64 \cdot 12 & = & \underline{43.7} & \cdot & 11.82 & & \underline{516} \\
 & & 179.4 & & & &)2366(13.2 \\
-\,0.44 \cdot 12 & = & \underline{-\,5.3} & \cdot & 13.42 & & \underline{-\,71} \\
 & & 174.1 & & & & 2295(13.2 = x
\end{array}
$$

$$jd = d - x/3 = 79.5 - 4.4 = 75.1$$

Compute vertical stresses

$$C = T = \frac{M}{jd} = \frac{2.37 \cdot 10^6}{75.1} = 31{,}600 \text{ lbs}$$

$$C = f_c/2 \cdot 13.2 \cdot 12 = 31{,}600$$

$$f_c = \frac{31{,}600 \cdot 2}{13.2 \cdot 12} = 399 \text{ psi}, \quad f_s = \frac{31{,}600}{1.57} = 20{,}100 \text{ psi}$$

Correct vertical compressive stress to stress parallel to face of buttress. Tan $\phi = 6 \div 12.33 = 0.487$; $\phi = 25^{\circ}\text{-}58'$; $\cos \phi = 0.899$.

Max. f_c parallel to face $= 399 \div \cos^2 \phi = 399 \div 0.81 = 493$ psi OK

Allowable stress $= 0.225\ f'_c\ (1.3 - 0.03\ \frac{h}{d})$

$h = (12.33^2 + 6^2)^{1/2} = 13.71$

Allowable stress $= 0.225 \cdot 3000 \left[1.3 - (0.03)(13.71 \div 1)\right] = 600$ psi
(See Section 1107, ACI Code)

Longitudinal Sill Design: The longitudinal sills will be designed as beams considered fixed at the toe of the buttress and both fixed and simply supported at the transverse sill. The loads on the longitudinal sills will be taken as a uniform load, equal in magnitude and opposite in direction to the reactions at the sills as determined in the apron design at Section 2 and 3, plus or minus the weight of the longitudinal sill.

Reaction at Sill from Apron Design

	Section 2	Section 3
Before fill	1549 (down)	147 (down)
No flow	1692 (down)	360 (up)
With flow	1769 (down)	411 (down)

From inspection of the reactions, it is evident that both the no-flow and with-flow conditions must be considered because of the reversal of direction at Section 3.

Determination of Loads

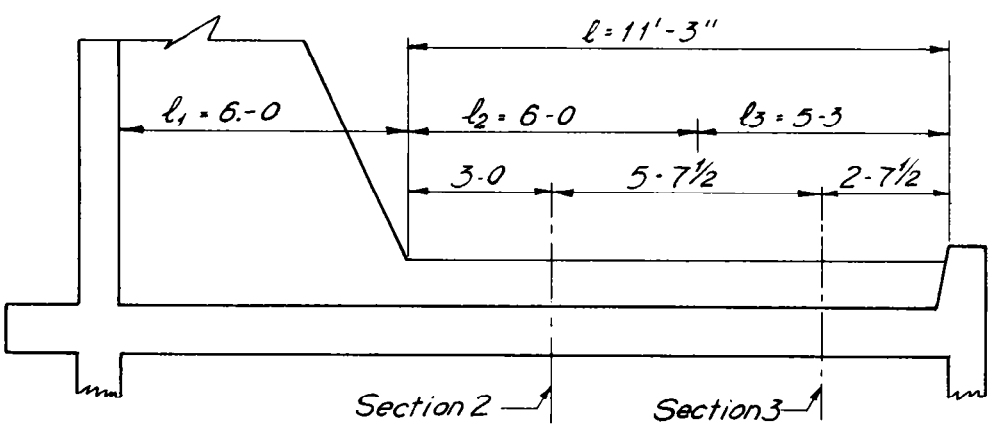

Wt. of longitudinal sill/ft length $= 1.0 \cdot 1.0 \cdot 1.0 \cdot 150 = 150$ lbs

Loads at Section 2

No flow, load $= 1692 - 150 = 1542$ lbs/ft (up)

With flow, load $= 1769 - 150 = 1619$ lbs/ft (up)

Loads at Section 3

No flow, load = 360 + 150 = 510 lbs/ft (down)
With flow, load = 411 − 150 = 261 lbs/ft (up)

Moments and Shears

No flow--both ends fixed

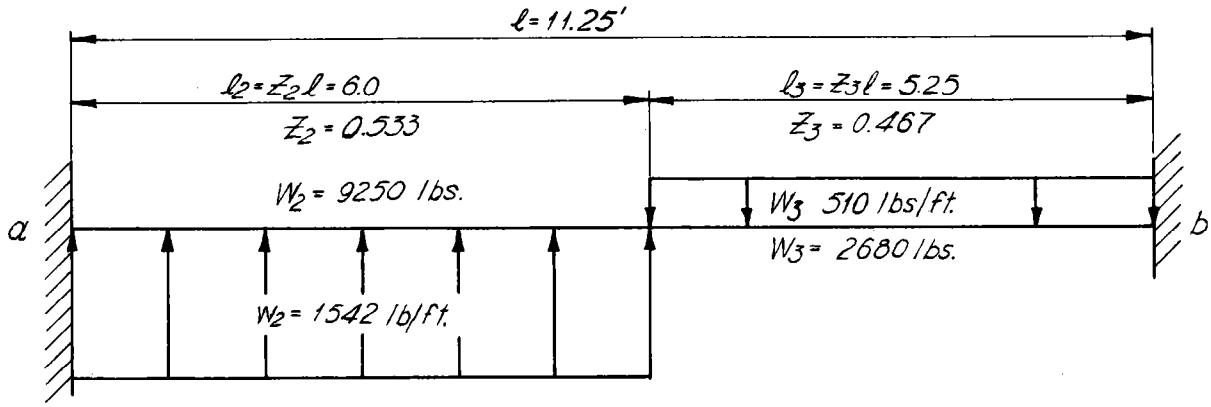

(See ES-32, EH, Sec. 6)

$$M^F_{ab} = -\frac{1}{12}\ell z_2\,(6 - 8z_2 + 3z_2^2)\,W_2 + \frac{1}{12}\ell z_3^2\,(4 - 3z_3)\,W_3$$

$$M^F_{ab} = -\frac{1}{12}(11.25)(0.533)(6 - 4.26 + 0.85)(9250) + \frac{1}{12}(11.25)(0.218)(2.60)(2680)$$

$$M^F_{ab} = -11{,}970 + 1425 = \underline{-10{,}545 \text{ ft lbs}}$$

$$M^F_{ba} = -\frac{1}{12}\ell z_3\,(6 - 8z_3 + 3z_3^2)\,W_3 + \frac{1}{12}\ell z_2^2\,(4 - 3z_2)\,W_2$$

$$M^F_{ba} = -\frac{1}{12}(11.25)(0.467)(2.91)(2680) + \frac{1}{12}(11.25)(0.284)(2.40)(9250)$$

$$M^F_{ba} = -3420 + 5920 = \underline{+2500 \text{ ft lbs}}$$

$$V^S_{ab} = R^S_a = \frac{1}{\ell}\left[W_3 z_3 \ell \cdot \frac{1}{2} - W_2\,(z_3\ell + z_2\ell \cdot \frac{1}{2})\right]$$

$$V^S_{ab} = \frac{1}{11.25}\left[(2680 \cdot 2.62) - (9250 \cdot 8.25)\right]$$

$$V^S_{ab} = \frac{1}{11.25}(7040 - 76{,}300) = \underline{-6150 \text{ lbs}}$$

$$V^S_{ba} = R^S_b = W_2 - W_3 - V^S_{ab} = 9250 - 2680 - 6150 = \underline{+420 \text{ lbs}}$$

$$V^F_{ab} = V^S_{ab} + \frac{1}{\ell}(M^F_{ab} + M^F_{ba}) = -6150 + \frac{1}{11.25}(-10{,}545 + 2500)$$

$$V^F_{ab} = -6150 - 715 = \underline{-6865 \text{ lbs}}$$

$$V^F_{ba} = V^S_{ba} + \frac{1}{\ell}(M^F_{ab} + M^F_{ba}) = +420 - 715 = \underline{-295 \text{ lbs}}$$

$$M^S_c = R^S_b z_3\ell + \frac{1}{2} W_3 z_3 \ell = (420 \cdot 5.25) + (1340 \cdot 5.25) = \underline{9240 \text{ lbs}}$$

Simple Moments (See ES-1, EH, Sec. 6)

At Section 2, $M_{\mathbb{C}} = \frac{1}{8} W_2 z_2 \ell = +6940$ ft lbs

At Section 3, $M_{\mathbb{C}} = \frac{1}{8} W_3 z_3 \ell = -1760$ ft lbs

	$M_x/M_{\mathbb{C}}$	for span $z_2\ell$	for span $z_3\ell$
at $0.5z\ell$	1.0	+6940	−1760
at $0.4z\ell$	0.96	+6660	−1690
at $0.3z\ell$	0.84	+5830	−1480
at $0.2z\ell$	0.64	+4440	−1127
at $0.1z\ell$	0.36	+2500	− 634

Plot moments and shears as explained in ES-32, EH, Sec. 6.

No flow--Simply supported at b

Satisfy this condition by correcting moments and shears when both ends are fixed.

With both ends fixed

$$M^F_{ab} = -10{,}545 \text{ ft lbs}, \quad M^F_{ba} = +2500 \text{ ft lbs}$$

$$V^F_{ab} = -6865 \text{ lbs}, \quad V^F_{ba} = -295 \text{ lbs}$$

Simply supported at b

$M_{ba} = 0$

$\therefore M_{ab} = M^F_{ab} + 0.5(-M^F_{ba})$, for 0.5 carryover factor and reason for minus sign, refer to any good reference on structural mechanics.

$$M_{ab} = -10{,}545 - 1250 = -11{,}795 \text{ ft lbs}$$

$$V_{ab} = V^F_{ab} + \frac{1}{\ell}(-1.5\, M^F_{ba}) = -6865 + \frac{1}{11.25}(-3750)$$

$$V_{ab} = -6865 - 333 = \underline{-7198 \text{ lbs}}$$

$$V_{ba} = V^F_{ba} - 333 = -295 - 333 = -628 \text{ lbs}$$

LONGITUDINAL SILL
(No flow)

+ indicates tension in top face
− indicates tension in bottom face

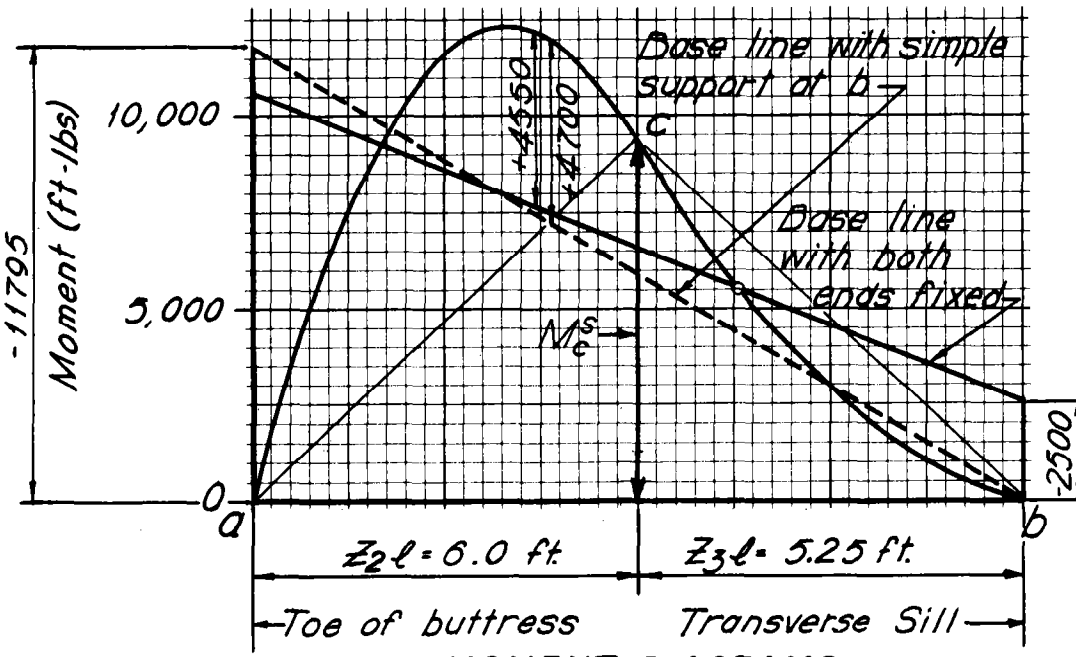

MOMENT DIAGRAMS

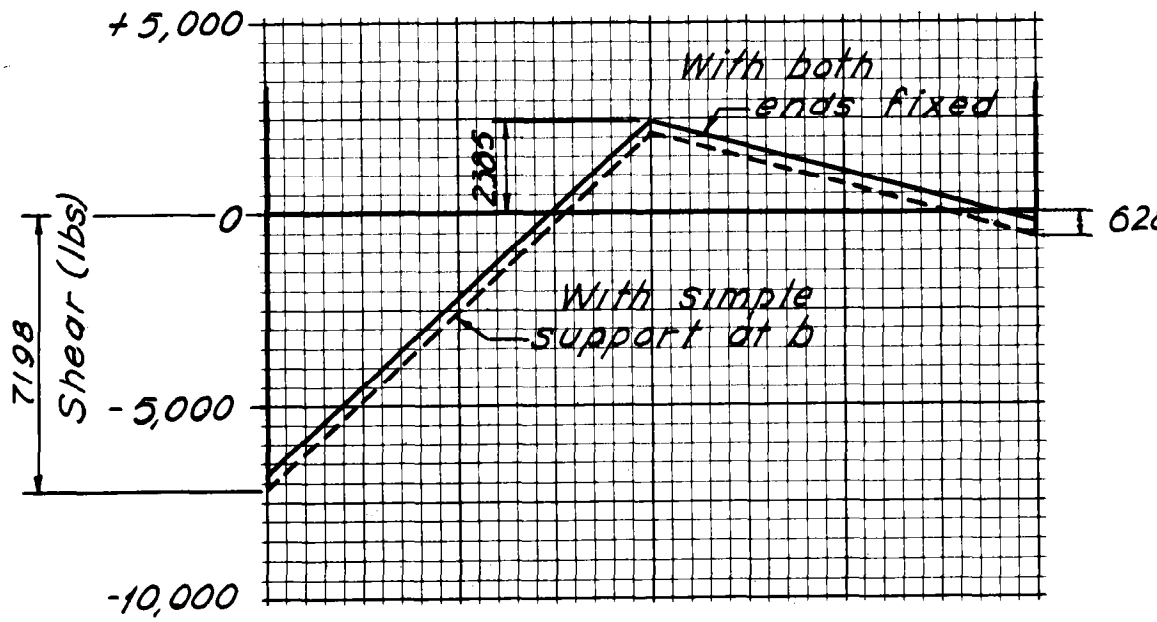

SHEAR DIAGRAMS

With flow--both ends fixed

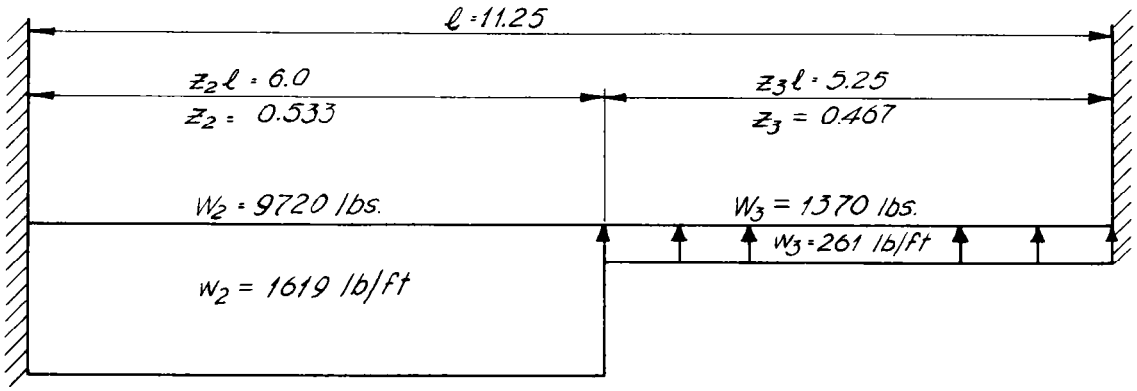

$$M^F_{ab} = -\frac{1}{12}\ell z_2\,(6 - 8z_2 + 3z_2^2)\,W_2 - \frac{1}{12}\ell z_3^2\,(4 - 3z_3)\,W_3$$

$$M^F_{ab} = -\frac{1}{12}(11.25)(0.533)(2.59)(9720) - \frac{1}{12}(11.25)(0.218)(2.60)(1370)$$

$$M^F_{ab} = -12{,}600 - 728 = \underline{-13{,}328 \text{ ft lbs}}$$

$$M^F_{ba} = +\frac{1}{12}\ell z_3\,(6 - 8z_3 + 3z_3^2)\,W_3 + \frac{1}{12}\ell z_2^2\,(4 - 3z_2)\,W_2$$

$$M^F_{ba} = +\frac{1}{12}(11.25)(0.467)(2.91)(1370) + \frac{1}{12}(11.25)(0.284)(2.40)(9720)$$

$$M^F_{ba} = 1746 + 6220 = \underline{+7966 \text{ ft lbs}}$$

$$V^S_{ab} = \frac{1}{\ell}\left[(-W_3 z_3 \ell \cdot \tfrac{1}{2}) - W_2\,(z_3\ell + \tfrac{1}{2}z_2\ell)\right]$$

$$V^S_{ab} = \frac{1}{11.25}\left[(-1370 \cdot 2.62) - (9720 \cdot 8.25)\right]$$

$$V^S_{ab} = \frac{1}{11.25}(-3600 - 80{,}100) = \underline{-7440 \text{ lbs}}$$

$$V^S_{ba} = W_2 + W_3 - V^S_{ab} = 9720 + 1370 - 7440 = \underline{+3650 \text{ lbs}}$$

$$V^F_{ab} = V^S_{ab} + \frac{1}{\ell}(M^F_{ab} + M^F_{ba}) = -7440 + \frac{1}{11.25}(-13{,}328 + 7966)$$

$$V^F_{ab} = -7440 - 476 = \underline{-7916 \text{ lbs}}$$

$$V^F_{ba} = V^S_{ba} - 480 = 3650 - 476 = \underline{+3174 \text{ lbs}}$$

$$M^S_c = V^S_{ba}\,z_3\ell - \frac{1}{2}W_3 z_3 \ell = (3650 \cdot 5.25) - (\tfrac{1}{2} \cdot 1370 \cdot 5.25)$$

$$M^S_c = 19{,}160 - 3600 = 15{,}560 \text{ ft lbs}$$

LONGITUDINAL SILL
(With flow)

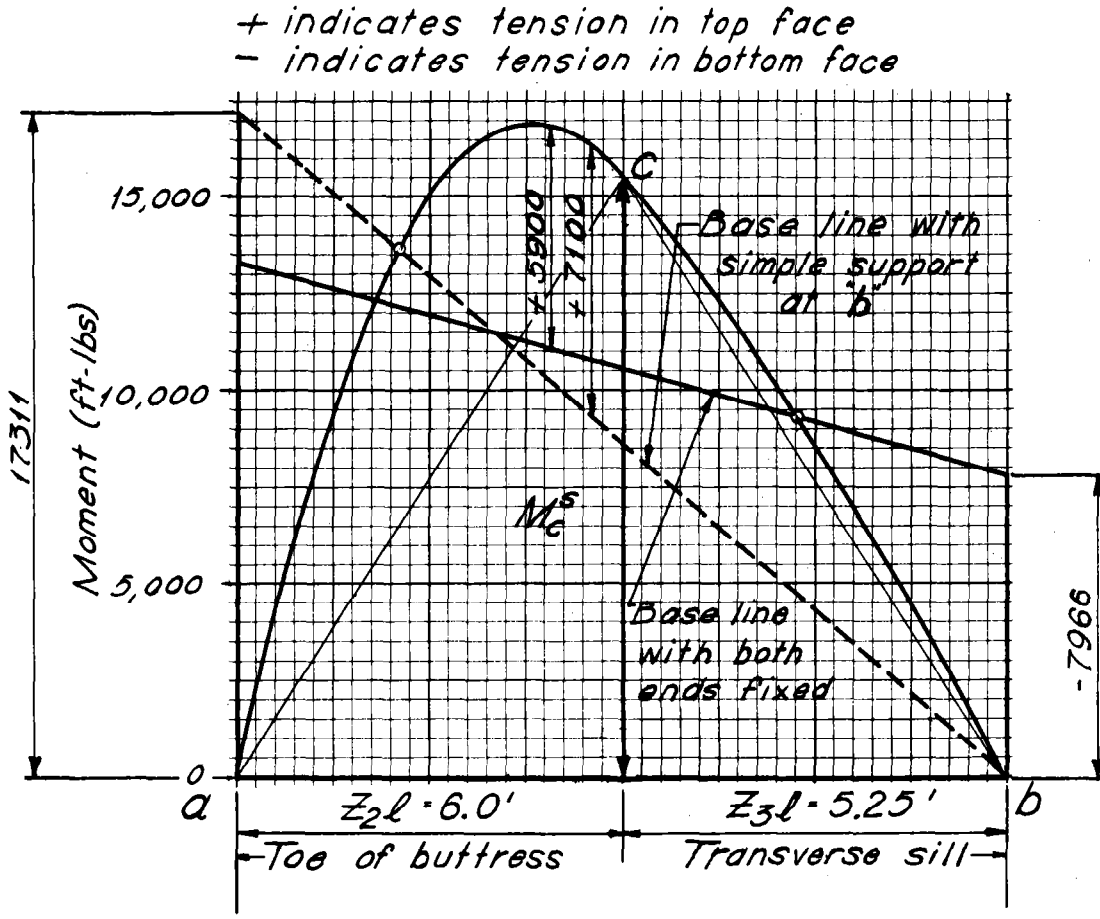

MOMENT DIAGRAMS

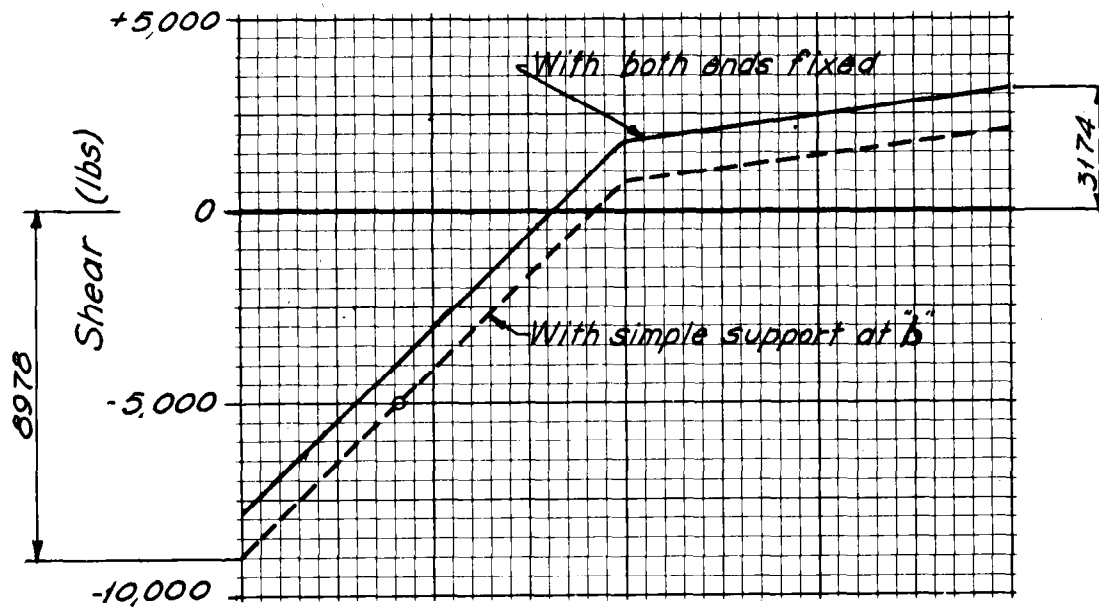

SHEAR DIAGRAMS

Simple Moments

At Section 2, $M_{\mathcal{C}} = \frac{1}{8} W_2 z_2 \ell = 7290$ ft lbs

At Section 3, $M_{\mathcal{C}} = \frac{1}{8} W_3 z_3 \ell = 900$ ft lbs

	$M_x/M_{\mathcal{C}}$	At Section 2	At Section 3
at $0.5z\ell$	1.0	7290	900
at $0.4z\ell$	0.96	6990	863
at $0.3z\ell$	0.84	6120	755
at $0.2z\ell$	0.64	4660	576
at $0.1z\ell$	0.36	2620	324

With flow--Simply supported at b

Correcting fixed end moments and shears

$M_{ba} = 0$

$M_{ab} = M^F_{ab} + 0.5\,(-M^F_{ba}) = -13{,}328 - 3983 = \underline{-17{,}311 \text{ ft lbs}}$

$V_{ab} = V^F_{ab} + \frac{1}{\ell}(-1.5\,M^F_{ba}) = -7916 + \frac{1}{11.25}(-1.5 \cdot 7966)$

$V_{ab} = -7916 - 1062 = -8978$ lbs

$V_{ba} = V^F_{ba} - 1062 = 3174 - 1062 = \underline{+2112 \text{ lbs}}$

Steel in bottom face $d = 11 + 12 - 3 - \frac{3}{8} - \frac{3}{4} = 18\ 7/8$ in (Use 19 in)

At Buttress

$M_{ab} = -17{,}311$, $V_{ab} = 8978$ (With flow, simple support at b)

Req'd. $A_s = 0.58$ in^2 (ES-45, EH, Sec. 6) Req'd. $\Sigma_o = 1.79$ in (ES-44)

Use 1 No. 7 bar ($A_s = 0.60$, $\Sigma_o = 2.75$)

Extend bar $\frac{8.3}{20}(6.0) + 1.0 = 3.49$ ft Say 3'-6" into sill and 2'-0" under buttress. Length = 5'-6".

At Sill

$M^F_{ba} = 7966$, $V^F_{ab} = 3174$, With flow, both ends fixed.

Req'd. $A_s = 0.273$ in^2, Req'd. $\Sigma_o < 1.0$ in

Use 1 No. 5 bar ($A_s = 0.31$, $\Sigma_o = 1.96$) Length of horizontal leg $= (\frac{15}{20} \cdot 5.25) + 1.0 + 0.583$ ft (No flow, both ends fixed governs) Use 5'-6" Vertical leg = 1'-0" in downstream face of toewall. Total length = 6'-6".

Steel in top face Use d = 19 in

M = 7100, V = 5000 (With flow, simple support at b governs)
Req'd. A_s = 0.235 in^2, Req'd. Σ_o = 1.45 in (u = 210 lbs/in^2)
Use 1 No. 5 bar (A_s = 0.31, Σ_o = 1.96) Start bar 2 in. from downstream edge of transverse sill and extend it about 1'-0" under buttress. Length = (0'-7") + (11'-3") + (1'-0") = 12'-10"
Use 13'-0". Use L bars No. 4 at 18 for tie bars. Both legs 1'-6", Length = 3'-0"

Transverse Sill Design: The transverse sill, together with the toewall, will be designed as a rectangular beam with its thickness equal to that of the toewall. The design moment at the ends of the beam will be determined, considering the beam as fixed at both ends. The design moment at mid-span will be determined, considering the beam to be partially restrained at the ends and assuming the end moments to be equal to one-half the fixed end moments. The loads will be the total base pressure minus the weight of water and/or concrete and the reactions from the longitudinal sills.

After fill--No flow

Total base pressures/ft length = 0.75 (99 + 123) ÷ 2 = 83 lbs/ft (up)
(See apron design)
Wt. of concrete = 4.75 · 0.75 · 1.0 · 150 = 534 lbs/ft (down)
Uniform load per ft = 534 − 83 = 451 lbs/ft (down)
Concentrated load = R_b from longitudinal sill = R = 628 lbs (down)

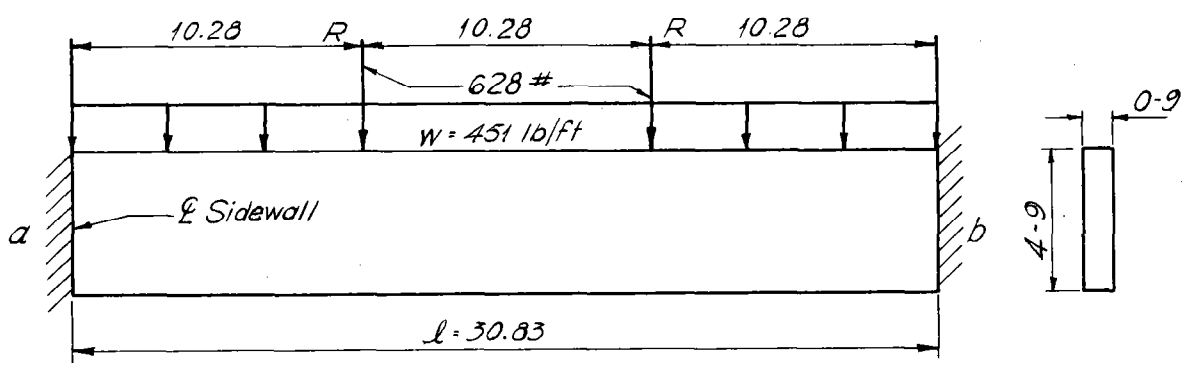

Moments and Shears

$$V_{ab} = -V_{ba} = \frac{w\ell}{2} + R = (451)(30.83)\frac{1}{2} + 628 = 6950 + 628$$

$$V_{ab} = 7578 \text{ lbs}$$

$$M_{ab} = -M_{ba} = \frac{1}{12}w\ell^2 + \frac{2}{9}R\ell = \frac{1}{12}(451)(30.83)^2 + \frac{2}{9}(628)(30.83)$$

$$M_{ab} = -M_{ba} = 35{,}700 + 4300 = 40{,}000 \text{ ft lbs}$$

Simple Moments

From Concentrated load at point of load
M = 628 · 10.28 = 6460 ft lbs

From Uniform Load

$$M_{\mathbb{C}} = \frac{1}{8} w\ell^2 = \frac{1}{8} \cdot 451\ (30.83)^2 = 53{,}600 \text{ ft lbs}$$

at 0.4ℓ, $M = 0.96 \cdot 53{,}600 = 51{,}400$ ft lbs
0.3ℓ, $M = 0.84 \cdot 53{,}600 = 45{,}000$ ft lbs
0.2ℓ, $M = 0.64 \cdot 53{,}600 = 34{,}300$ ft lbs
0.1ℓ, $M = 0.36 \cdot 53{,}600 = 19{,}300$ ft lbs

After fill--With flow

Total base pressure $= 0.75\ (551 + 567)\ \frac{1}{2} = 419$ lbs/ft (up)
Wt. of concrete = 534 lbs (down)
Wt. of H_2O on sill $= 62.4 \cdot 4.67 \cdot 0.75 = 218$ lbs (down)
Uniform load/ft $= 534 + 218 - 419 = 333$ lbs/ft (down)
Concentrated load $= R_b = R = 3174$ lbs (up)

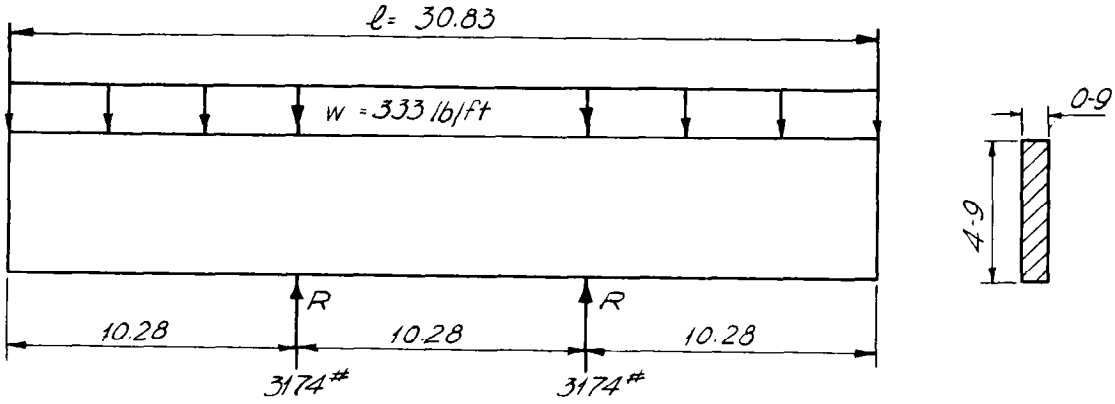

Moments and Shears

$$V_{ab} = -V_{ba} = \frac{w\ell}{2} - R = (333 \cdot 15.41) - 3174 = 1966 \text{ lbs}$$

$$M_{ab} = -M_{ba} = \frac{1}{12} w\ell^2 - \frac{2}{9} R\ell = \left[\frac{1}{12} \cdot 333 \cdot (30.83)^2\right] - \left[\frac{2}{9}\ (3176)(30.83)\right]$$

$$M_{ab} = -M_{ba} = 26{,}400 - 21{,}800 = 4{,}600 \text{ ft lbs}$$

Simple Moments

From Concentrated load at point of load

$M = 3176 \cdot 10.28 = 32{,}600$ ft lbs

From Uniform load

$$M_{\mathbb{C}} = \frac{1}{8} w\ell^2 = \frac{1}{8} \cdot 333\ (30.83)^2 = 39{,}600 \text{ ft lbs}$$

at 0.4ℓ, $M = 0.96 \cdot 39{,}600 = 38{,}000$ ft lbs
0.3ℓ, $M = 0.84 \cdot 39{,}600 = 33{,}300$ ft lbs
0.2ℓ, $M = 0.64 \cdot 39{,}600 = 25{,}300$ ft lbs
0.1ℓ, $M = 0.36 \cdot 39{,}600 = 14{,}260$ ft lbs

TRANSVERSE SILL

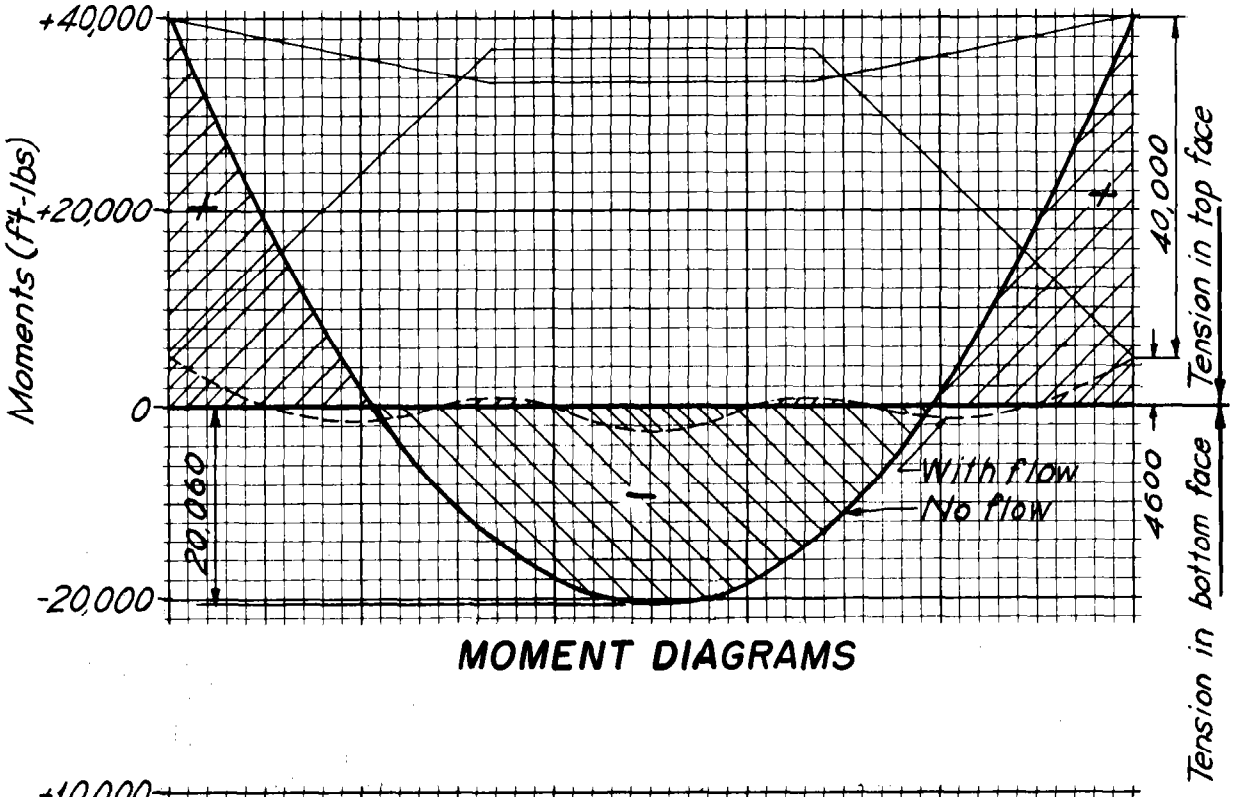

MOMENT DIAGRAMS

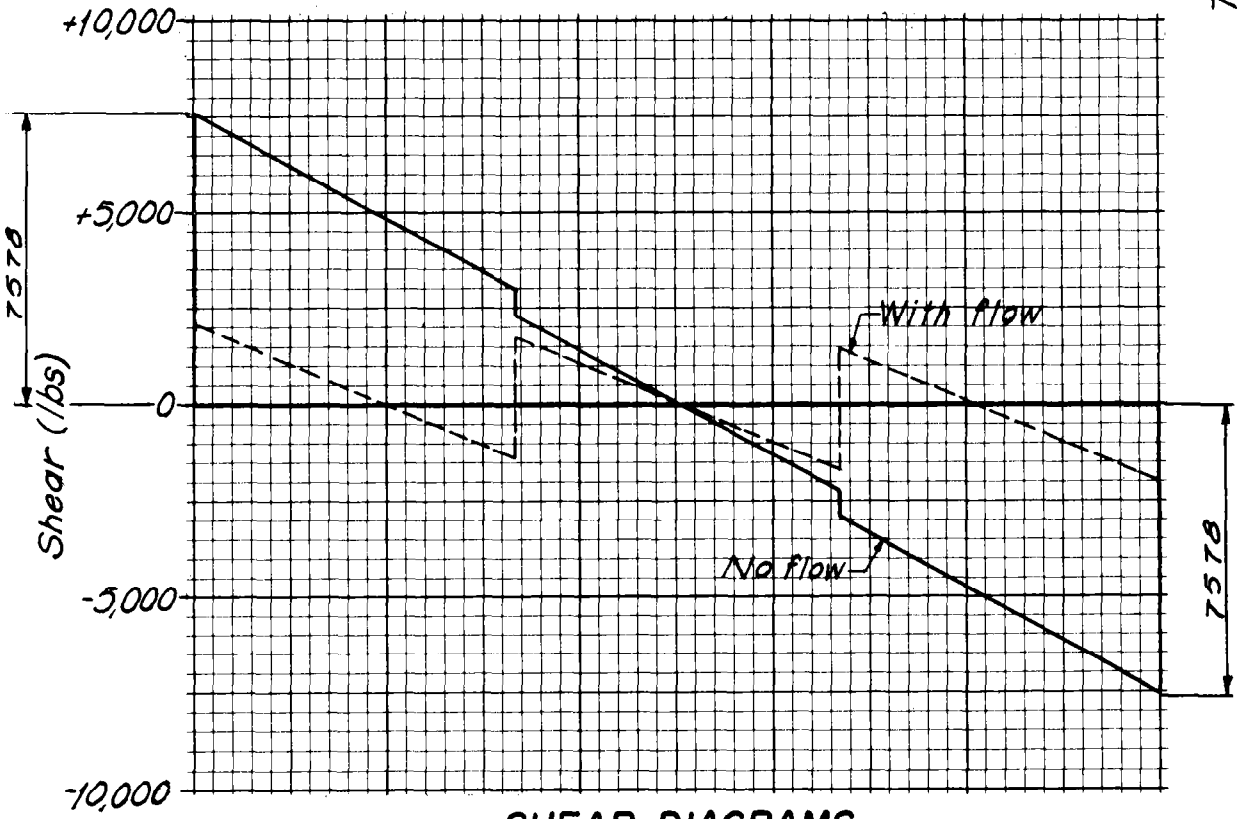

SHEAR DIAGRAMS

Steel in top face d = 57" − 4" = 53 in

M = 40,000 ft lbs, V = 7578 lbs (No flow governs)

Req'd. $A_s = M \div ad = 40.0 \div (1.44 \cdot 53) = 0.524$ in^2

Req'd. $\Sigma_o < 1.0$ in. Use 2 No. 5 bars ($A_s = 0.61$, $\Sigma_o = 3.93$)

Find where 2 No. 3 bars ($A_s = 0.22$) can be used

$M = ad\ A_s = 1.44 \cdot 53 \cdot 0.22 = 16.8$ ft kips which corresponds to a point $5.7/50 \cdot 30.83 = 3.52$ ft from ℄ of sidewall.

Length of horizontal leg of No. 5 bars = 3.52 + 0.25 + 1.0 = 4.77 ft

Use 4'-9". Make vertical leg 2'-0". Total length = 6'-9"

Length of No. 3 bars = (30'-0") + 2 (0'-8") + 2 (1'-0") − 2 (4'-9")
= 23'-10", Use 24'-0" with 1'-1" lap

Steel in bottom face Increase moment 50 percent of fixed end moment

Moment = 20.06 + (0.5 · 40) = 40.06 ft kips; shear = 4600 lbs (max)

$A_s = M \div ad = 40.06 \div (1.44 \cdot 53) = 0.532$ sq in

$\Sigma_o = 8\ V \div 7\ ud = (8 \cdot 4600) \div (7 \cdot 300 \cdot 53) = 36{,}800 \div 111{,}300$
$= 0.33$ in

Use 2 No. 5 bars ($A_s = 0.61$, $\Sigma_o = 3.93$). Extend bars 0'-6" into sidewall on both ends then length = 31'-0"

Other Steel

Vertical Steel

Use No. 3 at 12 in downstream face
Use No. 4 at 15 in upstream face
Length = (4'-9") − 2 (0'-3") = 4'-3"

Horizontal Steel

Use No. 4 in both faces
Length = (30'-0") + (0'-6") + (0'-6") = 31'-0"

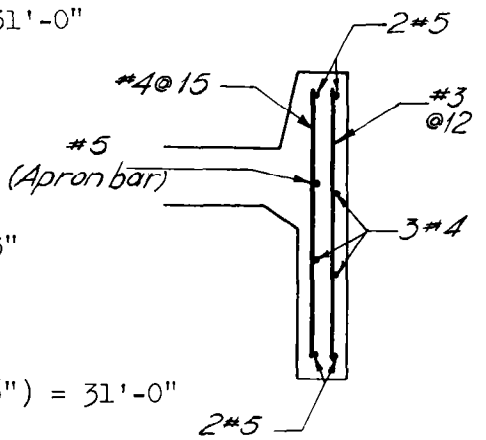

Wingwall Design: The wingwall will be designed independently of the rest of the structure and as a series of cantilever beams. The wingwall makes an angle of 45° with the sidewall.

Length of Wingwall = (J − s − 1.0) 2.83

Length = (9.0 − 1.33 − 1.0) 2.83 = 18.85 ft Use 19'-0"

Required width of footing to prevent overturning

Fill Characteristics

Moist wt. = W = 110 lbs/ft^3
Angle of internal friction = ϕ = 25°
Friction angle of soil = Z = ϕ = 25°
Angle between horizontal and vertical wall = θ = 90°
Angle between horizontal and fill slope = i = 19°-27'

Try 6.0 ft width of footing at upstream end

See equation 6.2-1 (EH, Sec. 6)

$$P = \frac{wH^2}{2} \frac{\sin^2(\theta - \phi)}{\sin^2\theta \sin(\theta + Z)\left[1 + \sqrt{\frac{\sin(Z+\phi)\sin(\phi - i)}{\sin(\theta + Z)\sin(\theta - i)}}\right]^2}$$

$$P = \frac{wH^2}{2} \frac{\sin^2 65^\circ}{\sin^2 90^\circ \cos 25^\circ \left[1 + \sqrt{\frac{\sin 50^\circ \sin 5^\circ\text{-}33'}{\cos 25^\circ \sin 70^\circ\text{-}33'}}\right]^2}$$

$$P = \frac{wH^2}{2} \frac{0.821}{(1.0)(0.906)\left[1 + \sqrt{\frac{0.766 \cdot 0.0967}{0.906 \cdot 0.943}}\right]^2} = \frac{wH^2}{2}(0.54)$$

$P = 55 \cdot (12.04)^2 \cdot 0.54 = 4300$ lbs

$P_h = P \cos Z = 4300 \cdot 0.906 = 3900$ lbs

$P_v = P \sin Z = 4300 \cdot 0.423 = 1850$ lbs

$H = 9.92 + 6 \tan i = 9.92 + 2.12 = 12.04, \quad H/3 = 4.01$

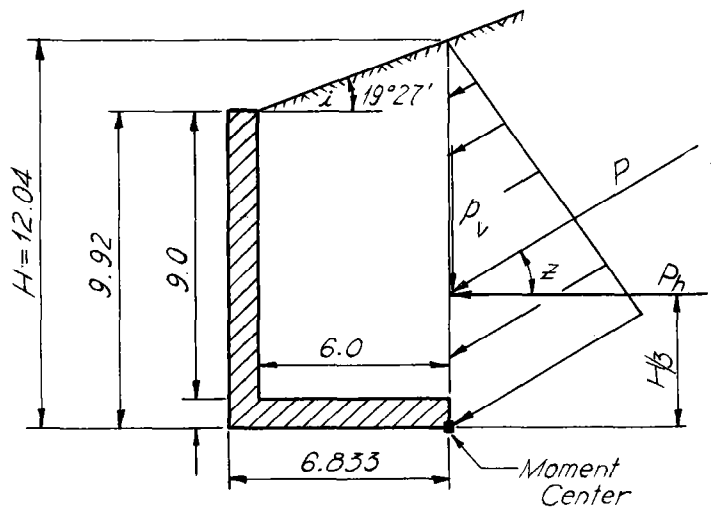

Taking Moments

Part	Weight	Force	Arm	Moment
Footing 6.0 · 0.92 · 150 =	828		3.0	2,480
Wall 9.92 · 0.83 · 150 =	1,230		6.42	7,900
Earth ▭ 6.0 · 9.0 · 110 =	5,940		3.0	17,820
Earth ◺ 3.0 · 2.12 · 110 =	700		2.0	1,400
P_v	1,850		0.0	0
P_h		3,900	4.01	15,640
	10,548			45,240

$z = 45{,}240 \div 10{,}548 = 4.29$ ft ∴ stable from overturning as resultant falls within the middle third of base ($6.83 \cdot 2/3 = 4.55$ ft)

Try 1.0 ft width of footing at downstream end and check overturning at midsection.

Footing at midsection = (6.0 + 1.0) ÷ 2 = 3.5 ft wide
Base width at midsection = 3.5 + 0.83 = 4.33 ft

$H = \left[(9.0 + 2.33) \div 2\right] + 0.92 + 3.5 \tan i$

$H = 5.67 + 0.917 + 1.23 = 7.82$ ft

Ht. of wall above footing = 5.67 ft

$P = (wH^2 \div 2)\ 0.54 = \left[(110 \cdot 7.82^2) \div 2\right] 0.54 = 1810$ lbs

$P_h = P \cos Z = 1810 \cdot 0.906 = 1640$ lbs

$P_v = P \sin Z = 1810 \cdot 0.423 = 765$ lbs

Taking Moments

Part	Weight	Force	Arm	Moment
Footing 3.5 · 0.92 · 150	482		1.75	844
Wall 6.58 · 0.833 · 150	822		3.92	3,220
Earth ▭ 3.5 · 5.67 · 110	2,180		1.75	3,820
Earth ◺ 1.75 · 1.23 · 110	238		0.412	98
P_v	765		0.0	0
P_h		1,640	2.61	4,280
	4,487		2.73	12,262

$4.33 \cdot \frac{2}{3} = 2.88 > 2.73$; hence, OK safe from overturning

Sliding

To prevent the wingwall from sliding, the wingwall footing will be tied into the apron and reinforced to carry the horizontal moment set up by the earth pressures on the wingwall, tending to rotate the wingwall about its junction with the sidewall.

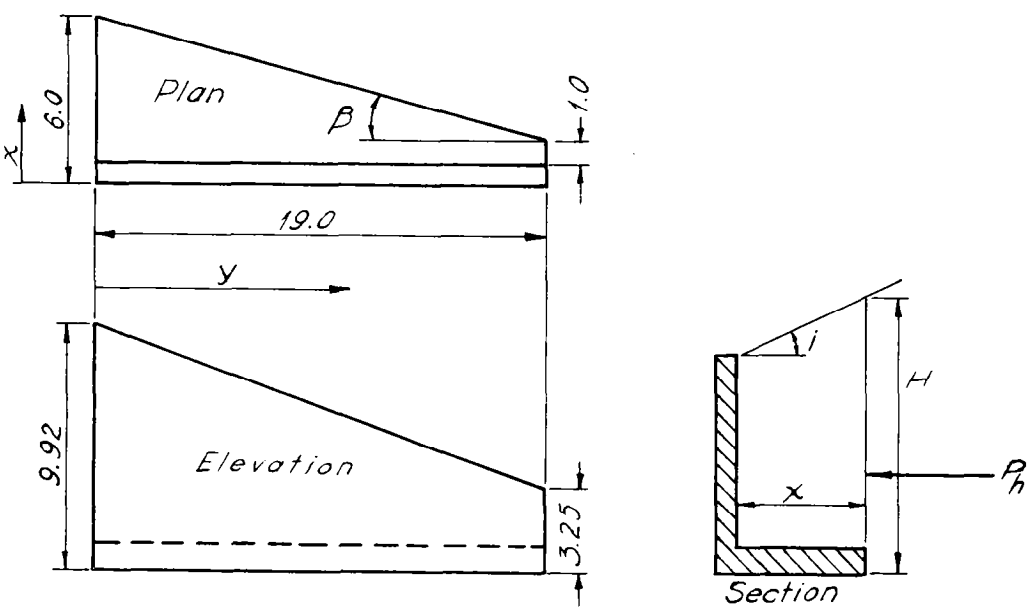

Determine Horizontal Moment

From overturning calculations

$P_h = P \cos Z = 0.906\ P$

$P = (wH^2 \div 2)\ 0.54$

$\therefore P_h = 0.906\ (110\ H^2 \div 2)\ 0.54 = 26.92\ H^2$

$$H = 9.92 + x \cos i - \left(\frac{9.92 - 3.25}{19.0}\right) y = 9.92 + 0.353\ x - 0.351\ y$$

$$x = 6 - \left(\frac{6.0 - 1.0}{19}\right) y = 6 - 0.263\ y$$

$H = 9.92 + 2.12 - 0.093\ y - 0.351\ y = 12.04 - 0.444\ y$

$\therefore P_h = 26.92\ (12.04 - 0.444\ y)^2$

$P_h = 3902 - 287.8\ y + 5.31\ y^2$

$$\text{Total } P_h = P_{ht} = P_h dy = \int_0^{19} (3902 - 287.8\ y + 5.31\ y^2)\ dy$$

$$M = P_h y dy = \int_0^{19} (3902 - 287.8\ y + 5.31\ y^2)\ y dy$$

$$M = \left[\frac{3902\ y^2}{2} - \frac{287.8\ y^3}{3} + \frac{5.31\ y^4}{4}\right]_0^{19}$$

$M = 704{,}300 - 662{,}600 + 173{,}000 = 214{,}700$ ft lbs

Determine effective depth

$\tan\beta = 5 \div 19 = 0.263 \quad \therefore \beta = 14^\circ\text{-}45'$

$\cos\beta = 0.967$

$d = (12 \cdot 6.83 \cos\beta) - 6 = 70.6$ in (Use 70.0 in)

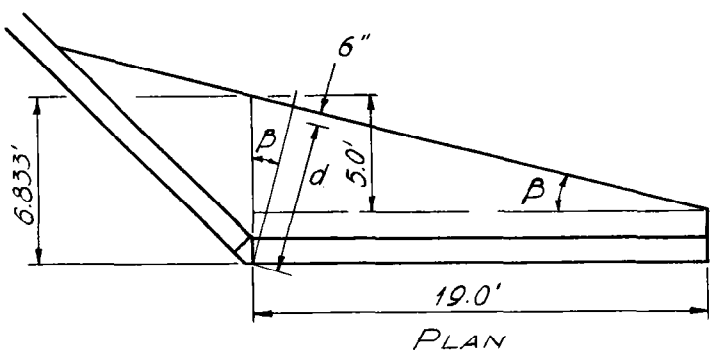

Req'd. steel (A_s = M (ft kip) ÷ ad)

$A_s = 214.7 \div (1.44 \cdot 70) = 2.13\ \text{in}^2$

Use 2 No. 10 bars ($A_s = 2.54$) place one bar 4 in. from edge and the other 10 in. from edge.

Design of Vertical Wall

Take Z, angle of friction between earth and concrete = 0
(See equation 6.2-3, EH, Sec. 6)

$$P = \frac{wH^2}{2} \frac{\cos^2 \phi}{\left(1 + \sqrt{\frac{\sin \phi \sin (\phi - i)}{\sin (\theta - i)}}\right)^2} = \frac{wH^2}{2} \frac{\cos^2 25^\circ}{\left(1 + \sqrt{\frac{\sin 25^\circ \sin 5^\circ\text{-}33'}{\sin 70^\circ\text{-}33'}}\right)^2}$$

H = 9.0 ft

$$P = \frac{110\ (9)^2}{2} \frac{0.821}{\left(1 + \sqrt{\frac{0.423 \cdot 0.0967}{0.943}}\right)^2} = 4455 \cdot 0.562 = 2510 \text{ lbs}$$

$$M = P\,\frac{H}{3} = 2510 \cdot 3 = 7530 \text{ ft lbs},\ V = P = 2510 \text{ lbs}$$

Assuming the same equivalent fluid pressure, w, at all points along the wall, build up M and A_s curves (d = 7 1/2 in)

$P = wH^2 \div 2 \quad \therefore\ w = 2\,P \div H^2$

$w = 2 \cdot 2510 \div 81 = 62.0 \text{ lbs/ft}^3$

$M = wH^3 \div 6 = 10.33\ H^3$

H	H^3	M	A_s
9.0	729	7530	0.67
8.0	512	5300	0.47
7.0	343	3550	0.31
6.0	216	2240	0.193
5.0	125	1290	0.108
4.0	64	662	<0.1
3.0	27	279	<0.1

d = 7.5 in

Vertical Steel (Unexposed face)

At Upstream End

M = 7530 ft lbs, V = 2510 lbs

Req'd. A_s = 0.67 in^2, Req'd. Σ_o = 1.29 in (M will govern)

Use No. 6 at 8 (A_s = 0.66, Σ_o = 3.53 in)

Find where No. 4 at 8 (A_s = 0.29) can be used. From A_s curve H = 6.9 ft, ∴ Length of No. 6 bar = 9.0 − 6.9 + 3.42 − 0.25 + 1.0 = 6.27; Use 6'-3" and place 3" above bottom of toewall.

Find point along wall where No. 6 at 12 (A_s = 0.44) can be used

From A_s curve H = 7.85

Dist. from upstream end = $(9.0 - 7.85)\left[\frac{19}{9.0 - 2.33}\right] = 3.28$ ft

Find where No. 4 at 12 (A_s = 0.20) can be used.

WINGWALL DESIGN

Unexposed face of wingwall

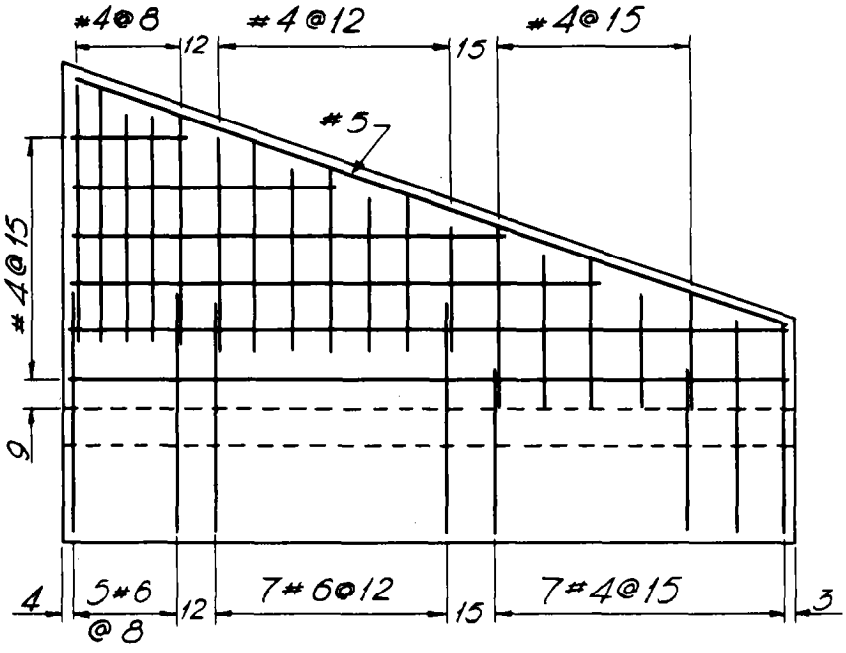

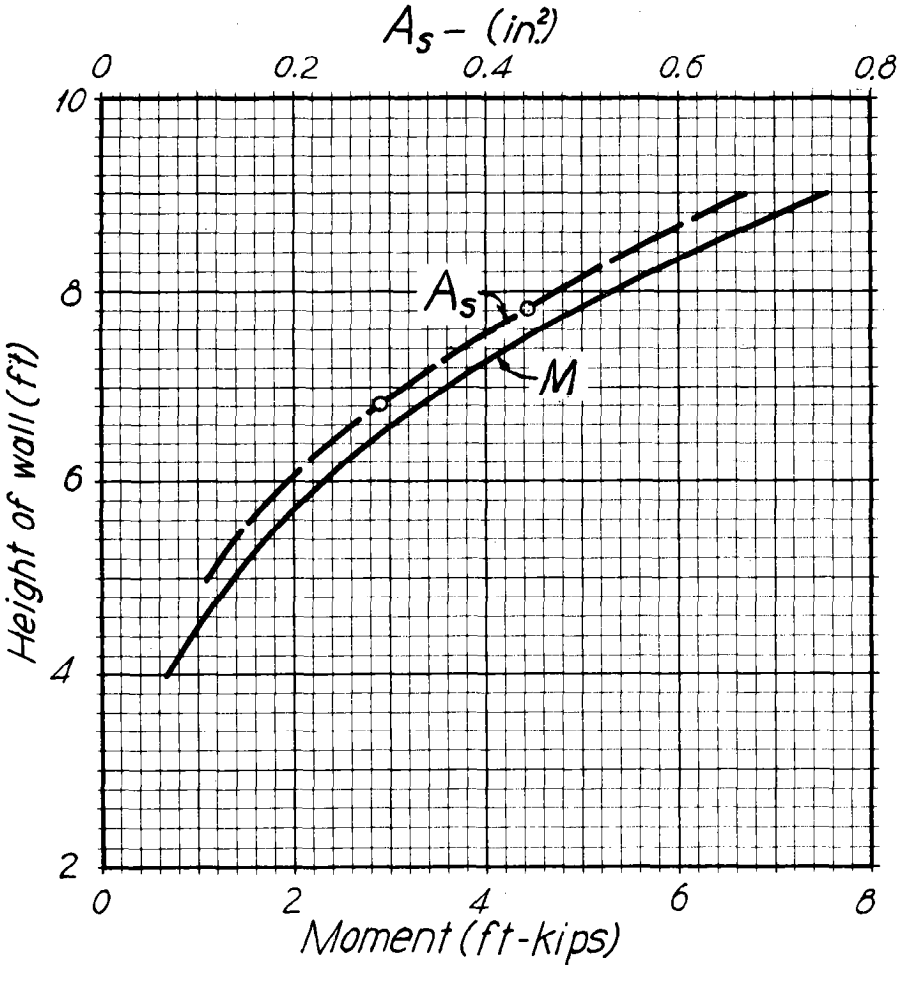

H = 6.1 ∴ Length of No. 6 bars = 7.85 − 6.1 + 3.42 − 0.25 + 1.0
= 5.92. Use 6'-0"

Find point along wall where No. 4 at 15 (A_s = 0.16) can be used

From A_s curve H = 5.70

Dist. from upstream end = $(9.0 - 5.70)\left[\dfrac{19.0}{9.0 - 2.33}\right] = 9.40$ ft

Horizontal Steel (Unexposed face)

Temp. steel--Use No. 4 at 15 (Start 9 in. above footing)

Steel in Exposed face

Horizontal steel--Use No. 5 at 15 Temp. steel

Vertical steel--Use No. 4 at 15 Tie steel. Set on construction joint.

Design of Footing

Load on upstream section (See page 4.12)

$$p = \frac{V}{A}\left[1 \pm \frac{6e}{d}\right]$$

V = vertical weight, A = area of base, e = eccentricity, d = length of section, e = z − (d ÷ 2) = 4.29 − (6.83 ÷ 2) = 0.873

$$p_1 = \frac{10{,}548}{6.83}\left[1 + \frac{6\ (0.873)}{6.83}\right]$$

$p_1 = 1546\ (1 + 0.766) = 2730$ lbs/ft^2

$p_2 = 1546\ (1 - 0.766) = 362$ lbs/ft^2

$p_3 = 362 + (6 \div 6.83)(2730 - 362)$

$p_3 = 362 + 2080 = 2442$ lbs/ft^2

$W_2 = (11.12 \cdot 110) + (0.92 \cdot 150)$

$W_2 = 1360$ lbs/ft^2

$W_3 = (9.0 \cdot 110) + (0.92 \cdot 150)$

$W_3 = 1128$ lbs/ft^2

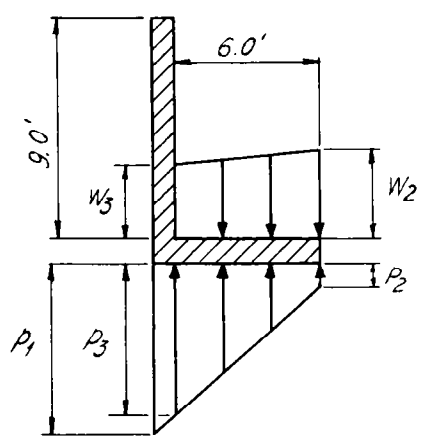

Moment and Shear

$$M = \frac{W_3 \cdot (6.0)^2}{2} + \frac{(W_2 - W_1)}{2}\,\frac{2}{3}\,(6.0)^2 - \frac{p_2(6.0)^2}{2} - \frac{(p_3 - p_2)}{2}\,\frac{1}{3}\,(6.0)^2$$

$$M = \frac{1128 \cdot 36}{2} + \frac{232 \cdot 36}{3} - \frac{362 \cdot 36}{2} - \frac{2080 \cdot 36}{6}$$

M = 20,300 + 2780 − 6510 − 12,480 = + 4090 ft lbs

$$V = \frac{(W_2 + W_3)}{2} 6.0 - \frac{(p_2 + p_3)}{2} 6.0 = (W_2 + W_3 - p_2 - p_3)\ 3.0$$

$$V = 3.0\ (1360 + 1128 - 362 - 2442) = 316 \cdot 3 = 948 \text{ lbs}$$

$d = 7\ 1/2$ in

Req'd. $A_s = 0.36\ in^2$. Use No. 6 at 12 ($A_s = 0.44$) to midsection then use No. 4 at 12.; Bent into downstream face of toewall.

Use No. 4 at 15 parallel to wall as tie steel.

Design of Headwall Extension

Due to the fact that the headwall extension is articulate, and the earth pressures on both sides of the wall will be about equal, the wall will be reinforced with the minimum steel requirements.

Vertical Steel (both faces)

Use No. 4 at 15

Length of bars in first pour = (2'-6") + (0'-11") + (0'-4") + (1'-3") − (0'-3") = 4'-9" (provides 1'-3" lap)

Horizontal Steel

Use No. 4 at 15, Length = 15'-3"

Steel in footing (⊥ to wall)(both faces)

Use No. 4 at 15, Length = 3'-6"

STEEL SCHEDULE

LOCATION	MARK	SIZE	QUAN	LENGTH	TYPE	A	B	TOTAL FT
Toewall	1	5	2	31-0	St			62-0
Tran Sill + Sdwl	2	5	4	6-9	2	4-9	2-0	27-0
Transverse Sill	3	3	2	24-0	St			48-0
Toewall	4	5	3	31-0	St			93-0
Twl + Tran Sill	5	3	30	4-3	St			127-6
" " " "	6	4	24	4-3	St			102-0
Wingwall Twl	7	4	4	5-3	St			21-0
" "	8	6	10	4-9	St			47-6
" "	9	6	14	6-0	St			84-0
" "	10	6	10	6-3	St			62-6
" "	11	4	6	20-9	18	18-9	2-0	124-6
Wngw foot + Twl	12	4	6	4-6	2	1-6	3-0	27-0
"	13	4	6	5-3	2	2-3	3-0	31-6
"	14	4	6	5-9	2	2-9	3-0	34-6
"	15	6	6	6-6	2	3-6	3-0	39-0
"	16	6	6	7-0	2	4-0	3-0	42-0
"	17	6	6	7-9	2	4-9	3-0	46-6
"	18	6	2	8-6	2	5-6	3-0	17-0
Wingwall Twl	19	4	6	21-6	16	19-6	2-0	129-0
Wngw foot + apron	20	10	2	28-6	St			57-0
" " "	21	10	2	27-9	St			55-6
" " "	22	4	2	21-3	St			42-6
" " "	23	4	2	15-9	St			31-6
" " "	24	4	2	9-6	St			19-0

LOCATION	MARK	SIZE	QUAN	LENGTH	TYPE	A	B	TOTAL FT
Wngw foot + apron	25	4	2	3-3	St			6-6
" " "	26	4	2	4-9	St			9-6
" " "	27	4	2	4-3	St			8-6
" " "	28	4	2	3-3	St			6-6
" " "	29	4	2	2-3	St			4-6
Cutoff Wall	30	4	12	19-3	St			231-0
" "	31	4	6	3-0	St			30-0
Cutoff Wall + Hdwl	32	5	21	5-0	St			105-0
" " "	33	4	27	4-9	St			128-3
Hdwl Ext Stub Ft	34	4	4	3-6	St			14-0
Hdwl Footing	35	4	4	19-3	St			77-0
Hdwl Ext Stub Ft	36	4	6	3-6	St			21-0
Apron + Sdwl	37	7	48	9-9	2	5-3	4-6	466-0
Apron	38	5	18	24-0	St			432-0
Apron + Twl	39	4	21	21-0	2	20-0	1-0	441-0
Apron	40	4	17	31-0	St			527-0
Apron + Twl	41	5	27	20-6	2	19-6	1-0	553-6
" "	42	5	2	6-6	2	5-6	1-0	13-0
Apron	43	7	2	5-6	St			11-0
Apron + Long Sill	44	4	16	3-0	2	1-6	1-6	48-0
Long Sill	45	5	2	13-0	St			26-0
Butt + C.O Wall	46	8	4	6-0	St			24-0
Buttress	47	5	20	3-3	St			65-0
"	48	4	4	7-3	St			29-0

LOCATION	MARK	SIZE	QUAN	LENGTH	TYPE	A	B	TOTAL FT
Hdwl Ext + C.O Wall	49	4	50	4-9	St			237-6
Hdwl Ext C.O + Ft	50	4	20	15-3	St			305-0
Hdwl Ext Footing	51	4	50	3-6	St			175-0
Hdwl Ext Stub	52	4	12	16-9	St			201-0
Headwall	53	4	42	12-9	St			535-6
Hdwl + Butt	54	8	4	12-9	St			51-0
Headwall	55	4	26	19-3	St			500-6
"	56	5	22	19-6	St			429-0
Buttress	57	5	4	3-6	St			14-0
"	58	5	4	5-9	St			23-0
"	59	5	4	7-9	St			31-0
"	60	5	4	10-0	St			40-0
"	61	5	4	5-6	St			22-0
"	62	5	8	4-6	St			36-0
"	63	5	12	3-6	St			42-0
"	64	5	8	2-6	St			20-0
"	65	5	4	1-6	St			6-0
"	66	5	4	13-6	St			54-0
Sidewall	67	4	26	6-3	St			162-6
"	68	4	4	7-6	St			30-0
"	69	4	4	9-3	St			37-0
"	70	4	4	11-0	St			44-0
"	71	4	4	13-0	St			52-0
"	72	4	6	14-6	St			87-0

LOCATION	MARK	SIZE	QUAN	LENGTH	TYPE	A	B	TOTAL FT
Sdwl + H.E. Stub	73	5	14	3-6	2	4-0	1-6	77-0
Sidewall	74	4	4	15-6	St			217-0
Sdwl + H.E. Stub	75	4	2	10-0	2	8-6	1-6	20-0
" " "	76	4	4	8-6	2	7-0	1-6	34-0
" " "	77	4	2	7-0	2	5-6	1-6	14-0
" " "	78	4	4	7-0	2	4-0	3-0	28-0
" " "	79	4	4	5-6	2	2-6	3-0	22-0
Sidewall	80	4	16	8-6	St			136-0
"	81	4	2	9-9	St			19-6
"	82	4	2	11-3	St			22-6
"	83	4	2	12-9	St			25-6
"	84	4	2	14-3	St			28-6
"	85	4	2	15-9	St			31-6
"	86	4	4	16-9	St			67-0
Sdwl + Hdwl	87	5	14	20-0	2	18-6	1-6	280-0
" "	88	5	2	10-0	2	8-6	1-6	20-0
" "	89	5	2	8-9	2	7-3	1-6	17-6
" "	90	5	2	7-6	2	6-0	1-6	15-0
Sdwl + H.E. Stub	91	5	2	8-0	2	4-6	3-6	16-0
" "	92	5	2	6-9	2	3-3	3-6	13-6
" " "	93	5	2	5-6	2	2-0	3-6	11-0
Sidewall	94	5	4	12-0	St			48-0
Wingwall	95	4	6	2-9	St			16-6
"	96	4	4	4-0	St			16-0

LOCATION	MARK	SIZE	QUAN	LENGTH	TYPE	A	B	TOTAL FT
Wingwall	97	4	6	3-9	St			22-6
"	98	4	4	4-9	St			19-0
"	99	4	4	5-6	St			22-0
"	100	4	6	6-0	St			36-0
"	101	4	4	6-6	St			26-0
"	102	4	4	18-6	St			74-0
"	103	4	2	12-6	St			25-0
"	104	4	2	10-0	St			20-0
"	105	4	2	7-0	St			14-0
"	106	4	2	5-0	St			10-0
"	107	5	4	19-9	St			79-0
"	108	4	6	2-0	St			12-0
"	109	4	6	3-3	St			19-6
"	110	4	6	4-6	St			27-0
"	111	4	6	6-0	St			36-0
"	112	4	4	7-3	St			29-0
"	113	4	2	8-3	St			16-6
"	114	5	4	18-6	St			74-0
"	115	5	2	14-6	St			29-0
"	116	5	2	10-9	St			21-6
"	117	5	2	7-0	St			14-0
"	118	5	2	3-3	St			6-6
Hdwl Ext	119	4	50	16-9	St			837-6
" "	120	4	52	15-3	St			793-0

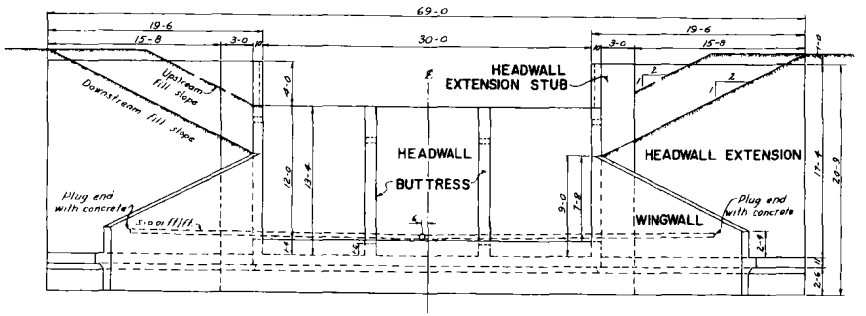

DOWNSTREAM ELEVATION

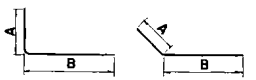

St. is an abbreviation for straight.
All reinforcing steel shall meet A.S.T.M. Designation: A 305

BAR TYPE DETAILS

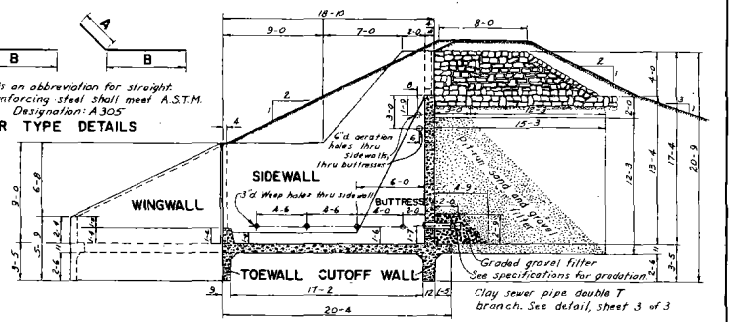

CROSS-SECTION ALONG ℄

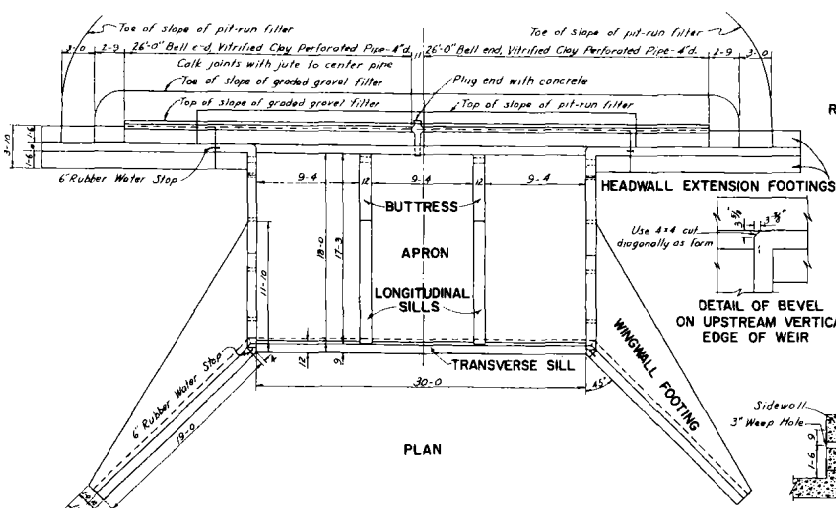

PLAN

Class B Concrete
f_s = 20,000 lbs./sq.in.
f_c' = 3,000 lbs./sq.in.
f_c = 1,200 lbs./sq.in.

F = 12-0, h = 4-0, L = 30-0

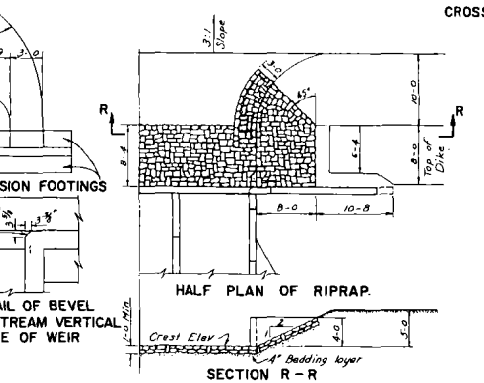

HALF PLAN OF RIPRAP.

SECTION R – R

DETAIL OF BEVEL ON UPSTREAM VERTICAL EDGE OF WEIR

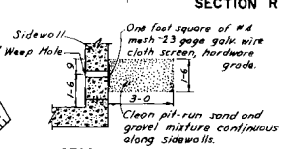

SECTION OF WEEP HOLE AND DRAIN FILTER

NOTE:
Structure is symmetrical about ℄, except clay drain pipe, outlet and filter.
Chamfer all exposed edges ¾".
All fillets are 6".

QUANTITIES

Reinforced Concrete ..... 103.48 Cu. Yds.
Reinforcing Steel:
- #3 ..... 173.50 Lin Ft ..... 65.99 Pounds
- #4 ..... 7,387.75 " ..... 4,935.02 "
- #5 ..... 2,722.50 " ..... 2,839.57 "
- #6 ..... 291.00 " ..... 437.08 "
- #7 ..... 479.00 " ..... 979.08 "
- #8 ..... 75.00 " ..... 200.25 "
- #10 ..... 112.50 " ..... 484.09 "

Drainage:
- 4" Vitrified clay perforated pipe, ¼" perforations ..... 52'-0"
  ASTM Designation C-211
- Clay sewer pipe double T branch (See detail) 1
- #4 mesh, 23 gage, wire screen cloth ..... 8.0 Sq.ft.
- 1"×1" woven wire mesh No. 12 gage ..... 1.0 Sq.ft.
- Metal clamp, 1" wide, ⅛" thick, 23⅝" long 1
- ¼"×¼" machine bolt with washer 1
- ¾" premolded asphaltic joint filler, 10" wide ..... 2'-0"
- Graded gravel filter material ..... 19.38 Cu Yd.
- Pit-run sand and gravel filter material ..... 219.13 Cu Yd.

Joints:
- ¼" Carbon steel plate, Structural grade, 6¼" wide ..... 747.20 lbs
- 6" Rubber water stop ..... 58'-10"
- Asphalt impregnated roofing paper, 50 lb/sq.ft. ..... 47.0 Sq.ft.

Riprap ..... 57.80 Sq.Yd.
Riprap bedding material - course pit-run sand and gravel ..... 6.42 Cu.Yd.

U.S. DEPARTMENT OF AGRICULTURE
SOIL CONSERVATION SERVICE
ENGINEERING DIVISION - DESIGN SECTION

REFERENCE	
ENGINEERING APPROVAL: M. M. Culp	CARTOGRAPHIC APPROVAL
DESIGNED BY: C.A.R.	DRAWN BY: C.A.R. & P.C.
CHECKED BY: M.M.C. & R.M.M.	DRAWING NO.: ES - 80
DATE: 7-6-53	SHEET 1 OF 3 SHEETS

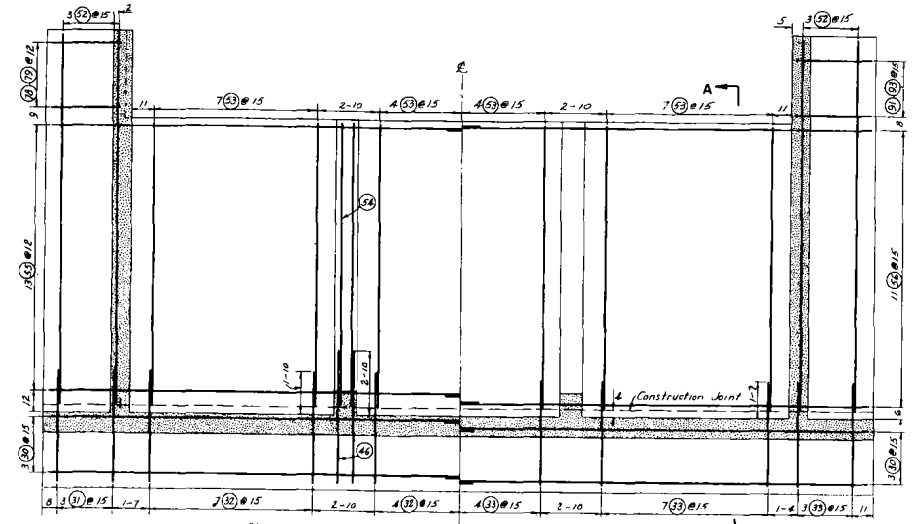

SECTIONAL ELEVATION OF HEADWALL AND HEADWALL EXTENSION STUB

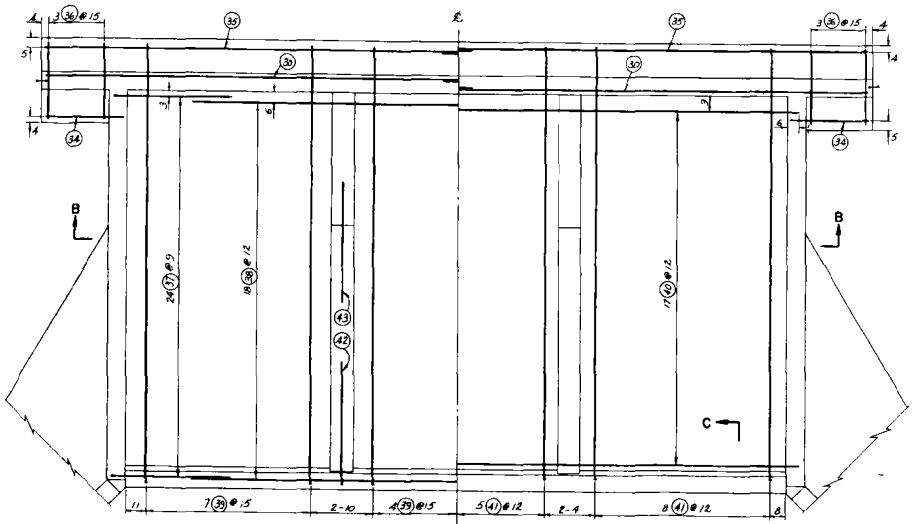

PLAN OF APRON AND HEADWALL EXTENSION STUB FOOTING

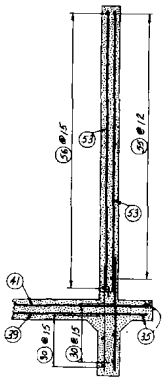

SECTION A-A

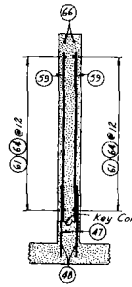

SECTION D-D

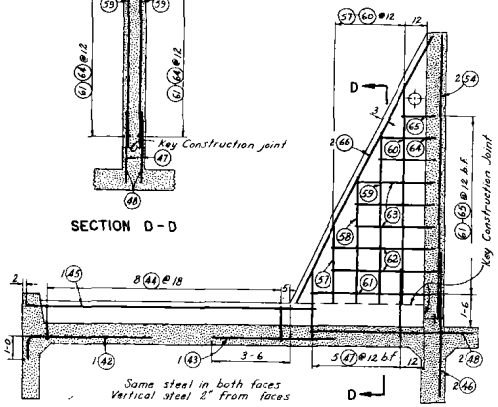

ELEVATION - LONGITUDINAL SILL AND BUTTRESS

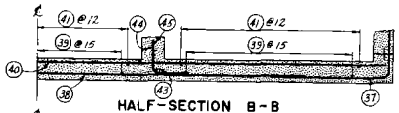

HALF-SECTION B-B

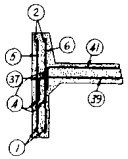

SECTION C-C

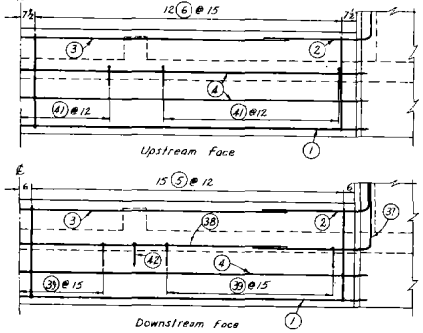

HALF ELEVATION
TOEWALL AND TRANSVERSE SILL

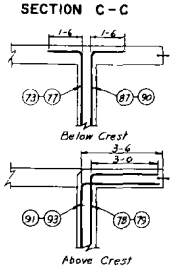

PLAN - JUNCTION OF HEADWALL, SIDEWALL AND HEADWALL EXTENSION STUB

U.S. DEPARTMENT OF AGRICULTURE
SOIL CONSERVATION SERVICE
ENGINEERING DIVISION - DESIGN SECTION

REFERENCE	
ENGINEERING APPROVAL M. M. Culp	CARTOGRAPHIC APPROVAL
DESIGNED BY C.A.R.	DRAWN BY C.A.R. & P.C.
CHECKED BY M.M.C. & R.M.M.	DRAWING NO. ES-80
DATE: 7-6-55	SHEET 2 OF 3 SHEETS

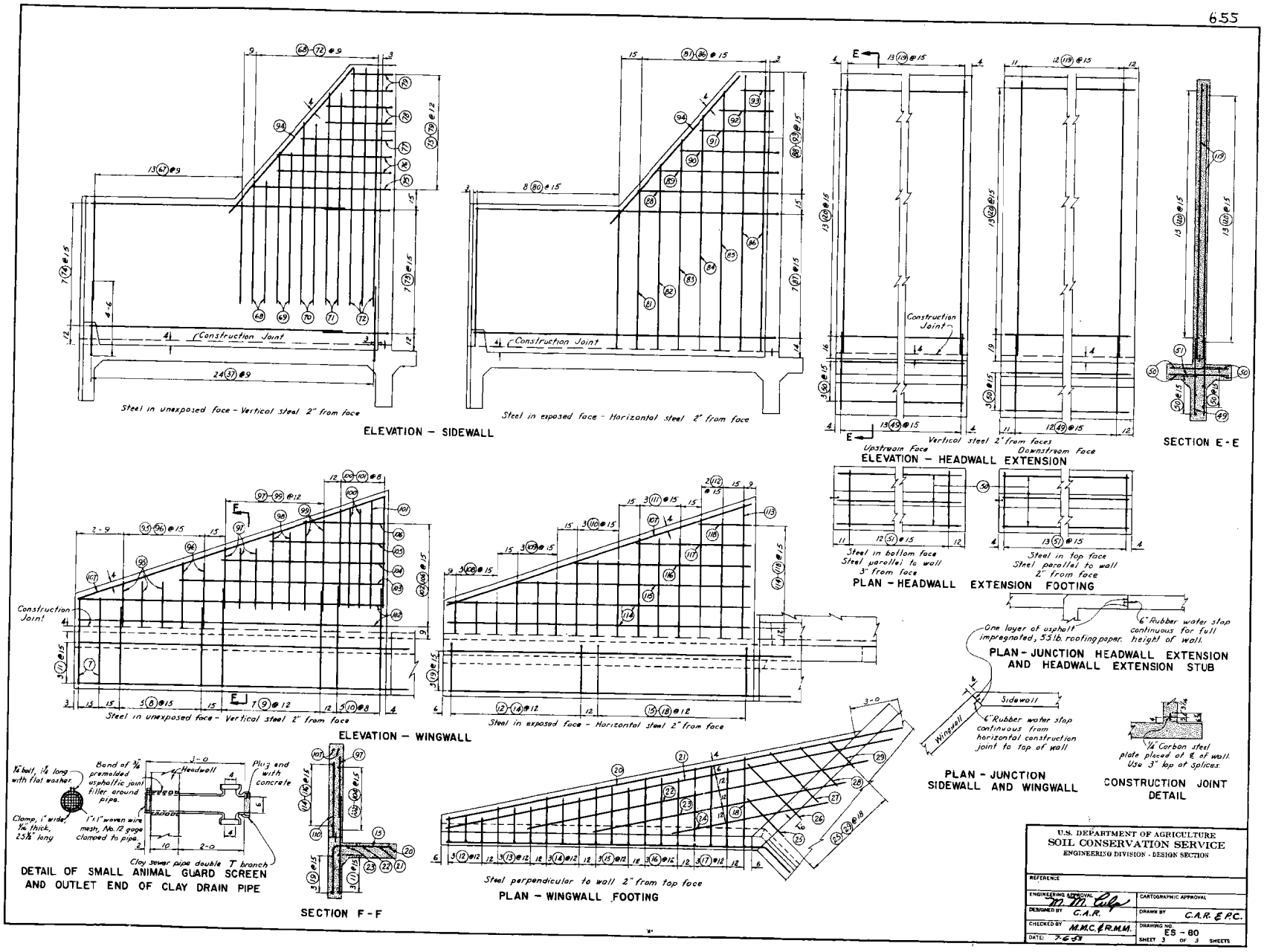
Steel in unexposed face - Vertical steel 2" from face
ELEVATION - SIDEWALL
Construction Joint
Steel in exposed face - Horizontal steel 2" from face
Upstream Face
Vertical steel 2" from faces
Downstream Face
ELEVATION - HEADWALL EXTENSION
SECTION E-E
Steel in bottom face
Steel parallel to wall
3" from face
Steel in top face
Steel parallel to wall
2" from face
PLAN - HEADWALL EXTENSION FOOTING
One layer of asphalt impregnated, 55 lb. roofing paper.
6" Rubber water stop continuous for full height of wall.
PLAN - JUNCTION HEADWALL EXTENSION AND HEADWALL EXTENSION STUB
Construction Joint
Steel in unexposed face - Vertical steel 2" from face
Steel in exposed face - Horizontal steel 2" from face
ELEVATION - WINGWALL
Sidewall
Wingwall
6" Rubber water stop continuous from horizontal construction joint to top of wall
PLAN - JUNCTION SIDEWALL AND WINGWALL
1/4" Carbon steel plate placed at ℄ of wall. Use 3" lap at splices.
CONSTRUCTION JOINT DETAIL
1/2" bolt, 1 1/4" long with flat washer
Clamp, 1" wide, 1/16" thick, 25 1/2" long
Band of 3/4" premolded asphaltic joint filler around pipe.
Headwall
Plug end with concrete
1"x1" woven wire mesh, No. 12 gage clamped to pipe.
Clay sewer pipe double T branch
DETAIL OF SMALL ANIMAL GUARD SCREEN AND OUTLET END OF CLAY DRAIN PIPE
SECTION F-F
Steel perpendicular to wall 2" from top face
PLAN - WINGWALL FOOTING
U.S. DEPARTMENT OF AGRICULTURE
SOIL CONSERVATION SERVICE
ENGINEERING DIVISION - DESIGN SECTION
REFERENCE
ENGINEERING APPROVAL
CARTOGRAPHIC APPROVAL
DESIGNED BY C.A.R.
DRAWN BY C.A.R. & P.C.
CHECKED BY M.M.C. & R.M.M.
DRAWING NO. ES - 80
DATE: 7-6-53
SHEET 3 OF 3 SHEETS