Chapter 5 Streamflow Data

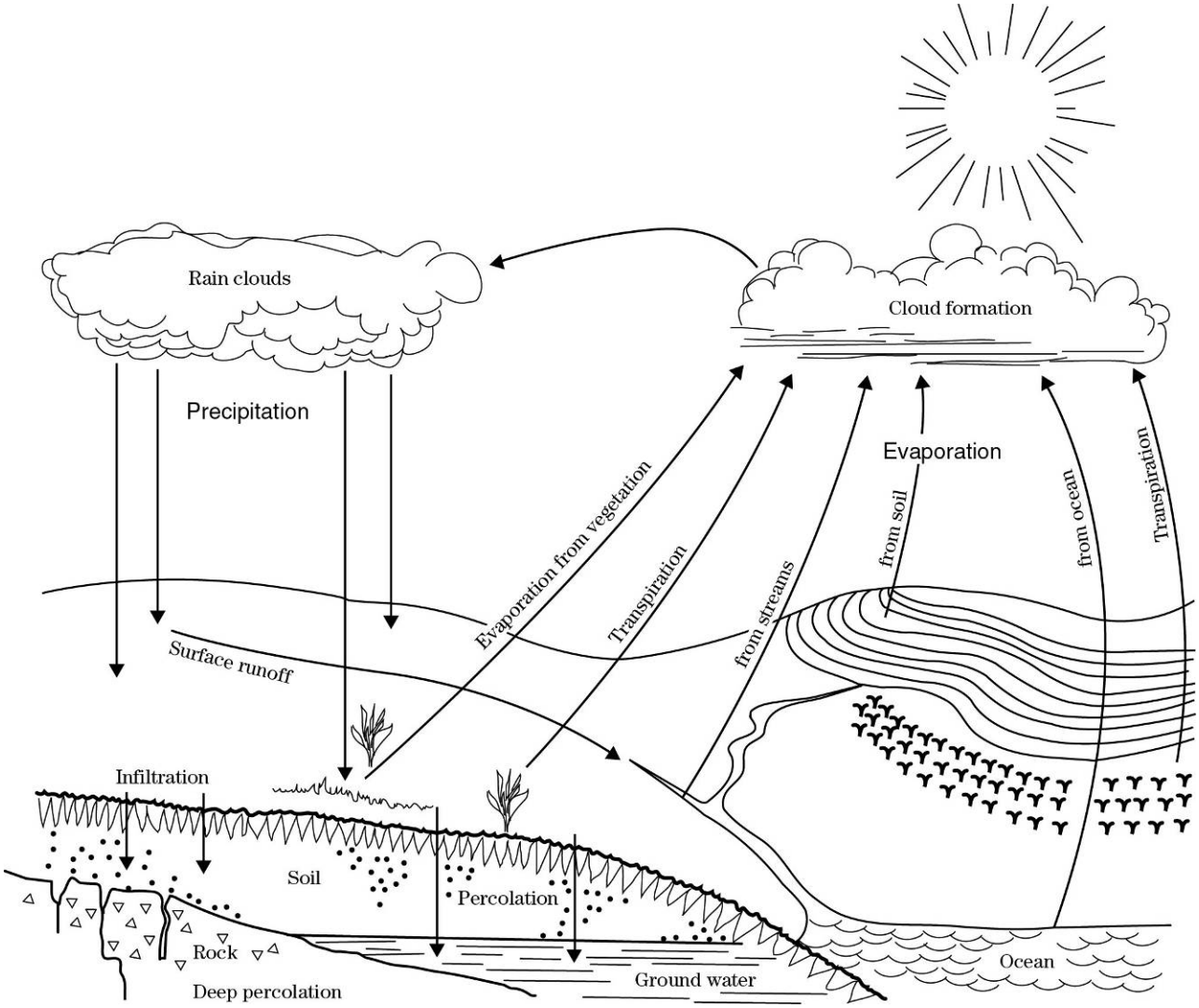

*****DRAFT*****

January 2013

(This page intentionally blank)

Acknowledgements

Chapter 5, Streamflow Data, was originally prepared by Victor Mockus (deceased) in 1964 and was reprinted with minor revisions in 1969. It was updated by the National Resources Conservation Service (NRCS) under the guidance of Norman Miller (retired), and released in 1997. This version has been updated under the guidance of Claudia Hoeft, national hydraulic engineer, Washington, DC. Numerous people have provided source information for this release as well as expert reviews and comments. Their contributions are acknowledged and very much appreciated. The technical editor hopes that all of the people who have contributed to this effort are properly credited.

Contributing Authors and Reviewers (Listed Alphabetically)

Jon Fripp, Stream Mechanics Civil Engineer, USDA-NRCS, National Design, Construction, and Soil Mechanics Center, Fort Worth, TX

Karl Visser, Hydraulic Engineer, USDA-NRCS, National Design, Construction, and Soil Mechanics Center, Fort Worth, TX

Phuc Vu, Design Civil Engineer, USDA-NRCS, National Design, Construction, and Soil Mechanics Center, Fort Worth, TX

Richard Weber, Wetland Hydraulic Engineer, Central National Technical Support Center, Fort Worth, TX

Technical Editor

Jon Fripp, Stream Mechanics Civil Engineer, USDA-NRCS, National Design, Construction, and Soil Mechanics Center, Fort Worth, TX

Publications staff

Lynn Owens, editor, U.S. Department of Agriculture, Natural Resources Conservation Service, National Cartographic and Geospatial Center, Technical Publications Team, Fort Worth, TX

Wendy Pierce, illustrator, U.S. Department of Agriculture, Natural Resources Conservation Service, National Cartographic and Geospatial Center, Technical Publications Team, Fort Worth, TX

Suzi Self, editorial assistant, U.S. Department of Agriculture, Natural Resources Conservation Service, National Cartographic and Geospatial Center, Technical Publications, Team, Fort Worth, TX

Contents

630.0500 Introduction 1

630.0501 Sources 1

(a) Data Independence 4

(b) Data Sufficiency 5

(c) Climatic Cycles and Trends 6

(d) Watershed Changes 8

(e) Mixed Populations 9

(f) Reliability of Flow Estimates 9

(g) Regulated flows 10

630.0502 Installation and operation of streamflow stations 10

(a) Temporary streamflow station installations 10

630.0503 Streamflow data uses 12

(b) Mean daily discharges 12

(c) Transposition of streamflow records 22

(d) Volume-duration-probability analysis 26

(e) Probability-duration analysis 26

(f) Flow duration curves 27

(g) Determination of runoff curve numbers 27

630.0504: References 33

List of Figures

Figure 5- 1: Crest staff gage (USGS 1968) 12

Figure 5- 2: Sample of USGS surface water-supply paper showing recorded mean daily discharges (USGS 1974) 14

Figure 5- 3: Sample of USGS surface water-supply paper summarizing discharge records (USGS 1964) 15

Figure 5- 4a: Daily flow records plotted on logarithmic scale 17

Figure 5- 5: Solution for runoff equation 24

Figure 5- 6: Rainfall versus direct runoff plotted from an experimental ARS watershed in Treynor, Iowa 31

List of Tables

Table 5- 1: Man Daily Discharges, annual flood period (excerpt from Figure 5-2) 19

Table 5- 2: Factors affecting the correlation of data. A guide to the transposition of streamflow. 25

Table 5- 3: Curve numbers for events with annual peak discharge for Watershed 2 near Treynor, Iowa 32

630.0500 Introduction

Streamflow data collected by various agencies describe the flow characteristics of a stream at a given point. Normally, data are collected by using a measuring device commonly called a stream gage.

Streamflow data are used to indicate the present hydrologic conditions of a watershed and to check methods for estimating present and future conditions. Specific uses presented in part 630 are for determining hydrologic soil-cover complex numbers (chapter 9), frequency analysis (chapter 18), determining water yields (chapter 20), and designing floodwater retarding structures (chapter 21). This chapter describes ways to use this information to determine runoff from a specific event, how to use this information with rainfall data to estimate the watershed runoff curve number, and how to use the data to determine volume duration-probability relationships.

630.0501 Sources

Published streamflow data for the United States are available from many sources. If a gage is available and the conditions applicable, a gage analysis is generally considered preferable since it represented the actual rainfall-runoff behavior of the watershed in relation to the stream. However, it is important to determine if the present watershed conditions are represented by the stream gage record or if there has been a significant change in land use. If there has been a significant increase in urbanization the

historical record may not be represent current conditions. A variety of local, state and federal agencies operate and maintain stream gages. The main sources are:

- **U.S. Geological Survey (USGS, Department of Interior):** Water Supply Papers (WSP) and other publications issued regularly contain records collected from continuously gaged streamflow stations and other crest stage and low flow data. USGS is the major source of streamflow data for the United States. Currently there are about 7,000 active stream gaging stations operated by the U.S. Geological Survey (USGS) across the country and about 13,000 discontinued gaging stations. Historical peak flow data can be found at the following USGS website: http://nwis.waterdata.usgs.gov/usa/nwis/peak
  Descriptions of streamflow methods of gaging and other facts about USGS gaging practices are given in Measurement and Computation of Streamflow, Volume 1: Measurement of Stage and Discharge, and Volume 2: Computation of Discharge (USGS 1982).

- **U.S. Bureau of Reclamation (BOR, Department of Interior):** This agency gages and publishes streamflow data at irregular intervals in technical journals and professional papers.

- **U.S. Forest Service (FS, Department of Agriculture):** Streamflow data are

published at irregular intervals in technical bulletins and professional papers.

- **Agricultural Research Service (ARS, Department of Agriculture):** ARS routinely publishes compilations of small watershed data. The most recent is Hydrologic Data for Experimental Agricultural Watersheds in the United States, 1978-79 (USDA, ARS 1989). This series is in 22 volumes. ARS also maintains REPHLEX, which is an online data base consisting of breakpoint rainfall-runoff data from ARS experimental watersheds. For information on this resource, contact the Water Data Center, ARS Hydrology Lab, Beltsville, Maryland. ARS practices are described in Field Manual Handbook 224 (USDA, ARS 1979).

- **Corps of Engineers (COE, Department of Defense):** COE obtains gage data and publishes streamflow data at irregular intervals in technical journals and professional papers. Most of the data appears in USGS publications.

- **Natural Resources Conservation Service (NRCS, Department of Agriculture):** NRCS gages and publishes streamflow data at irregular intervals in technical journals and professional papers. NRCS and the National Oceanographic and Atmospheric Administration's National Weather Service (NWS) jointly analyze snow and precipitation data in the Snow Survey Program. The data are used to forecast

seasonal runoff in the western United States, which depends on snowmelt for about 75 percent of its water supply. The NRCS National Weather and Climate Center (NWCC) in Portland, Oregon, archives snow course, precipitation, streamflow, reservoir, and temperature data for states. The data, which includes many USGS gage sites, is accessible electronically.

In performing a frequency analysis of peak discharges, certain assumptions need to be verified including data independence, data sufficiency, climatic cycles and trends, watershed changes, mixed populations, and the reliability of flow estimates. The stream flow gage records must provide random, independent flow event data. These assumptions need to be kept in mind, otherwise the resultant discharge-frequencies distribution may be significantly biased, leading to inappropriate designs and possible loss of property, habitat, and human life.

(a) Data Independence

In order to perform a valid discharge-frequency analysis the data points used in the analysis must be independent, i.e. not related to each other. Flow events often times occur over several days, weeks, or even months, as can be the case with snowmelt. Using subsequent days of high flow from the same event in a frequency analysis is not

appropriate since these data are dependent upon each other. This would exaggerate the frequency of this magnitude of event and result in lower than actual peak flows. It is common practice to minimize this problem by extracting annual peak flows from the streamflow record to use in the frequency analysis. The annual maximum flow for each water year (October 1 to September 30) is used in flow frequency analyses.

(b) Data Sufficiency

Gage records should contain at least 10 years of consecutive peak flow data and, to minimize bias, should span both wet and dry years. If a gage record is shorter, it may be advisable to consider relying more on other methods of hydrologic estimations. When the desired event has a frequency of occurrence of less than 2 to 5 years, a *partial duration series* is recommended. This is a subset of the complete record where the values are above a pre- selected base value. The base value is typically chosen so that there are no more than three events in a given year. In this manner, the magnitude of events that are equaled or exceeded three times a year can be estimated. Care must be taken to assure that multiple peaks are not associated with the same event so that independence is preserved. The return period for events estimated with the use of a partial duration series is typically 0.5 years less than what is estimated by an annual series (Linsley et al 1975). While this difference is fairly small at large events (100 yr for

a partial vs. 100.5 yr for an annual series), it can be significant at more frequent events (1 yr for a partial vs. 1.5 yr for an annual series). It should also be noted that there is more subjectivity at the ends of both the annual and partial duration series frequency curves.

It is also important to use data that fully captures the peak for peak flow analysis. If a stream is flashy (typical of small watershed) the peak may occur over hours or even minutes rather than days. If daily averages are used, then the flows may be artificially low and result in an underestimate of storm event values. Therefore, for small watershed, it may be necessary to look at hourly or even 15 minute peak data.

(c) Climatic Cycles and Trends

Climatic cycles and trends have been identified in meteorological and hydrological records. Cycles in streamflow have been found in the world's major rivers. For example, Pekarova et. al. (2003) identified 3.6-, 7-, 13-14-, 20-22 and 28-29-year cycles of extreme river discharges throughout the world. Some cycles have been associated with oceanic cycles, such as the El Niño - Southern Oscillation, in the Pacific (Dettinger et al, 2000) and the North Atlantic Oscillation (Pekarova et. al, 2003). Trends in

streamflow volumes and peaks are less apparent. However, trends in streamflow timing are likely, as has been presented in Cayan et. Al, (2001) for the Western United States. The identification of both cycles and trends is hampered by the relatively short records of streamflow available - as streamflow data increases, more cycles and trends may be identified. However, sufficient evidence does currently exist to warrant concern for the impact of climate cycles on the frequency analysis of peak flow data, even with 20, 30 or more years of record.

When performing a frequency analysis, it can be important to also analyze data at neighboring gages (that have longer or differing period of records) to assess the reasonableness of the streamflow data and frequency analysis at the site of interest. Keeping in mind the design life of the planned project and relating this to any climate cycles and trends identified during such a period can identify, in at least a qualitative manner, the appropriateness of use of streamflow data. A case study is provided in Appendix B of this chapter which describes analysis completed to assess climatic bias. Paleoflood studies, studies that use the techniques of geology, hydrology, and fluid dynamics to exploit the long-lived evidence often left by floods, may lead to a more comprehensive frequency analyses. Such studies are more relevant for projects with long design lives, such as dams. For more information on paleoflood techniques, see

the text *Ancient Floods, Modern Hazards: Principles and Applications of Paleoflood Hydrology* (House et al, 2001).

(d) Watershed Changes

Changes in watersheds can change the frequency of high flows in streams. These changes, which are primarily caused by humans, include urbanization; reservoir construction, with the resulting attenuation and evaporation; stream diversions; deforestation from logging, infestation, high intensity fire; and reforestation. Before a discharge-frequency analysis is used or to judge how the frequency analysis is to be used, watershed history and records should be evaluated to assure that no significant watershed changes have occurred during the period of record. If such significant change has occurred in the record, the period of record may need to be altered or the frequency analysis may need to be used with caution, with full understanding of its limitations.

Particular attention should be paid to watershed changes when considering the use of data from discontinued gages. It was common to discontinue the small (< 10 mile^2) drainage areas in the early 1980's. Aerial photographs can provide useful information in determining if the land use patterns of today are similar to the land use patterns during

the gage's period of record. Each gage site has to be evaluated on an individual basis to determine whether today's' cross sections represent yesteryears flow records.

(e) Mixed Populations

At many locations, high flows are created by different types of events. For example, in mountain watersheds high flow may result from snowmelt events; rain on snow events, or rain events. Also, tropical cyclones may produce differences from frontal systems. Gages with records that contain such different types of events require special treatment.

(f) Reliability of Flow Estimates

Errors exist in streamflow records, as with all measured values. With respect to US Geological Survey records, data that are rated as "excellent" means that 95% of the daily discharges are within 5% of their true value, a "good" rating means that the data are within 10% of their true value, and a "fair" rating means that the data are within 15% of their true value. Records with greater than 15% error are considered "poor" (US Geological Survey 2002).

These gage inaccuracies are often random, possibly minimizing the resultant error in the frequency analysis. Overestimates may be greatest for larger, infrequent events,

especially the historic events. If consistent overestimation has occurred, the error is not random but is, instead, a systematic bias that may have resulting ramifications.

(g) Regulated flows

Flows below dams are considered to be regulated flow. The normal statistical techniques in Bulletin 17B cannot be used in these situations. However, in some cases, standard graphic statistical techniques can be used to determine the frequency curve. A review of the reservoir operation plan and project design document will provide information on the downstream releases.

630.0502 Installation and operation of streamflow stations

NRCS cooperates with the USGS in the installation and operation of streamflow stations needed by NRCS. This cooperation is on a formal administrative basis, and the Engineering Division can advise on the administrative procedure (National Engineering Manual, Section 530.02).

(a) Temporary streamflow station installations

Sometimes streamflow information is needed for a brief period on a small stream,

irrigation ditch, gully, or reservoir, and the circumstances do not justify the installation of a continuous recorder. If the flow to be measured is small, measuring devices described in NEH-15, Chapter 9, Measurement of Irrigation Water, can be used. If only the maximum stage or peak rate of flow is needed, a crest staff gage can be used at a culvert or other existing structure. Figure 5-1 shows a typical inexpensive staff gage. The pipe of the gage contains a loose material (usually powdered cork) that floats and leaves a high-water mark or maximum stage. The stage is used with a rating curve (chapter 14) to estimate the peak rate of flow.

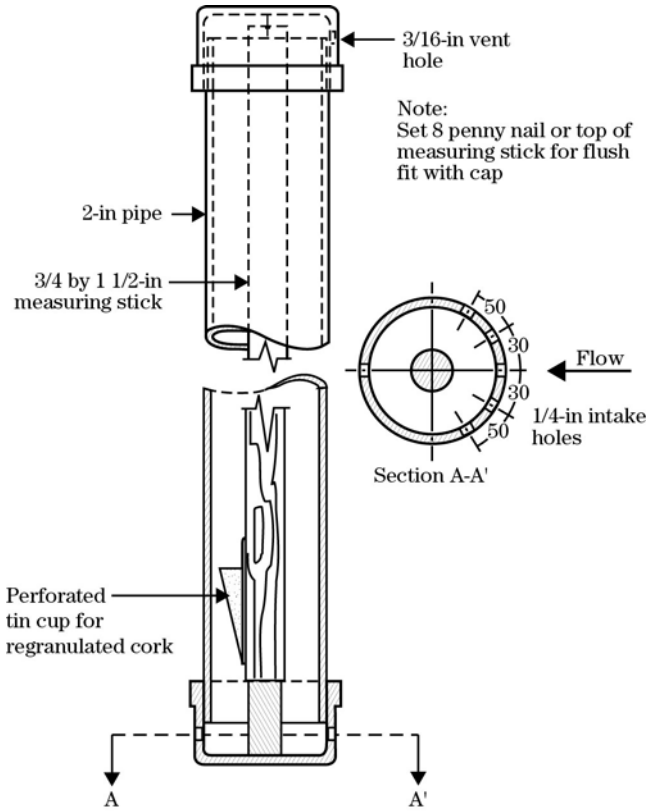

Figure 5- 1: Crest staff gage (USGS 1968)

630.0503 Streamflow data uses

(b) Mean daily discharges

Records of mean daily discharges are generally published in the form shown in figure 5-2, a typical page from a water supply paper (WSP). Each state publishes an annual summary of the daily flows for each USGS station that contains continuous flow and

stage data. Summaries of discharge records appear in various forms; a typical page from a WSP containing summaries is shown in figure 5-3. Summaries containing daily flow records were published cumulatively by USGS for 5-year increments until 1970. Figure 5-3 shows a page from an older WSP containing the summaries of all records for 1951 through 1960. Such older summaries covering longer periods do not have the daily flow records.

Wabash River Basin—03332.300 Little Indian, Creek Royal Center, Indiana

Location—Lat. 40° 52' 33" long. 86° 35" 26", in NE 1/4 NW 1/4 Sec. 13. T.28 11., R.2 11., White county on right bank at downstream side of county road bridge, 2.8 miles (4.7 km) upstream from mouth, 3.2 miles (5.1 km) downstream from Fredericks ditch 4.8 miles (7.7 km) northwest of Royal Center Post Office.
Drainage area—35.0 SQ MI (90.6 sq. km).
Period of Record—July 1959 to September 1973, converted to partial-record station.
Average Discharge—14 years 28.7 ft³/s (0.813 m³/s), 11.14 in/yr. (283 mm/yr).
Remarks—Current year: Max. discharge, 349 ft³/s (9.84 m³/s) Dec. 31, gage height, 6.61 ft (2.015 m) minimum daily, 4.8 ft³/s (0.14 m³/s) Sept. 24. Period of record: Max. discharge about 500 ft³/s (14.2 m³/s) Mar. 5, 1963 (gage ht unknown): min. daily 0.5 ft³/s (0 014 m³/s) Dec. 17-22, 1963 Maximum stage known, 11.2 ft (3.41 m) in Spring 1957, from information by local residents.
Remarks—Records good.

Discharge, in cubic feet per second, water year October 1972 to September 1973

DAY	OCT	NOV	DEC	.IAN	FEB	MAR	APR	MAY	JUN	JUL	AUG	SEP
1	84	100	42	292	46	23	139	39	38	39	161	8.8
2	62	92	39	210	99	26	103	36	32	29	97	8.8
3	50	96	37	153	96	29	86	33	28	25	61	8.5
4	44	68	35	209	71	32	74	30	48	25	38	8.2
5	49	56	34	146	63	70	62	27	200	22	24	8.2
6	45	48	74	99	55	89	55	26	134	20	19	8.2
7	40	48	57	79	49	67	49	26	84	17	14	8.5
8	36	72	45	63	44	53	33	27	58	16	11	8.2
9	32	61	40	49	40	47	42	26	45	16	10	7.6
10	29	53	36	40	36	52	42	24	36	15	9.1	7.9
11	54	59	45	35	32	155	37	22	32	14	8.2	7.6
12	88	4	47	30	31	155	47	22	30	13	7.9	7.6
13	62	63	141	28	29	100	67	21	28	12	7.6	7.6
14	50	188	104	29	30	136	30	21	26	12	36	8.2
15	42	162	72	29	32	161	43	20	27	12	47	9.1
16	40	116	62	29	30	107	49	20	45	12	22	7.9
17	36	94	48	39	30	169	81	19	183	11	16	6.7
18	32	76	40	50	28	168	63	18	135	11	13	6.4
19	30	66	37	78	27	149	66	20	79	11	12	6.1
20	30	70	50	57	30	116	se	20	54	13	12	5.8
21	30	70	57	46	32	90	105	18	41	14	9.6	5.3
22	56	62	62	83	30	75	210	18	34	13	8.8	5.0
23	136	54	57	115	28	64	211	19	30	12	8.5	5.0
24	112	49	57	71	26	54	134	18	27	14	16	4.8
25	80	48	66	58	25	84	95	21	24	14	14	8.8
26	64	54	59	57	25	145	71	19	24	26	12	6.1
27	53	57	51	61	24	94	56	19	34	21	10	5.0
28	52	52	47	69	23	73	45	27	143	15	9.7	5.5
29	46	46	63	63	—	65	39	38	92	12	9.4	16
30	42	44	235	49	—	67	39	64	56	48	9.4	12
31	40	—	343	42	—	71	—	52	—	103	9.4	
Total	1,642	2,099	2,182	2,458	1,119	2,788	2,272	810	1,847	637	742.4	231.7
Mean	53.0	70.3	70.4	79.3	40.0	89.9	75.7	26.1	61.6	20.5	23.9	7.72
Max	136	188	343	292	99	169	211	64	200	103	161	18
Min	29	34	34	28	23	23	37	18	24	11	7.6	4.8
CFSM	1.51	2.00	2.01	2.27	1.1.	2.57	2.10	.75	1.76	.59	.68	.22
In	1.75	2.23	2.32	2.61	1.19	2.96	2.41	.86	1.96	.68	.79	.25

Cal YR 1972	Total 14,224.6	Mean 38.9	Max 343	Min 2.3	CFSM 1.11	In 15.12
WTR YR 1973	Total 18,828.61	Mean 51.9	Max 343	Min 4.8	CFSM 1.47	In 20.01

Peak Discharge (Base, 250 ft³/s) — Dec 31 (1 000) 349 ft³/s (6.61 ft)

Figure 5- 2: Sample of USGS surface water-supply paper showing recorded mean daily discharges (USGS 1974)

Nueces River Basin—2080 Atascosa River at Witsett, TX

Location—Lat. 28°37'20" long. 98°17"05", on right bank 1,400 feet upstream from bridge on Farm Road 99, 0.9 mile west of Whitsett, Live Oak County, and 4 miles downstream from LaParita Creek.
Drainage area—1,171 mi².
Records available—September 1924 to May 1926, May 1932 to September 1960.
Gage—Water-stage recorder and artficial control. Datum of gage is 159.04 feet above mean sea level, datum of 1929. Prior to May 8, 1926, chain gage at bridge 1,600 feet downstream at datu 1.38 feet higher.
Average discharge—29 years (1924-25, 1932-60), 135 ft³/s (97,740 acre-foot per year).
Extremes—1924-26, 1932-60: Maximum discharge, 39,300 ft3/s July 7, 1942 (gage height, 38.3 feet from floodmark), from rating curve extended above 12,000 ft3/s on basis of slope-area measurement at gage height 38.0 feet; no flow at times. Maximum stage since at least 1881, about 41 feet in September 1919.
Remarks—Considerable losses of floodflows into various permeable formations occur upstream from station. June 1951 to May 1958 a considerable part of low flow resulted from flow of several artesian wells near Campbellton, which were drilled by the Lower Nueces River Water Supply District and turned into river to supplement the supply for city of Corpus Christi. Small diversions above station.

Monthly and yearly mean discharge, in cubic feet per second

Water year	Oct	Nov	Dec	Jan	Feb	Mar	Apr	May	Jun	Jul	Aug	Sep	The year
1951	0.47	0.58	2.70	4.88	6.39	10.0	6.98	188	239	1.60	6.49	445	75.5
1952	20.0	20.7	13.9	17.5	48.5	14.9	65.4	39.2	6.76	114	6.74	246	50.7
1953	7.58	16.4	24.6	22.5	17.2	17.4	59.4	542	30.3	32.1	50.4	591	118
1954	76.3	13.9	10.0	9.97	15.6	15.2	62.3	43.8	39.8	7.59	0	3.29	24.8
1955	21.6	27.2	9.27	19.2	128	16.2	12.2	130	60.6	19.2	39.4	19.5	41.3
1956	378	5.21	11.7	11.6	11.3	10.6	31.9	62.8	21.6	14.5	68.0	177	35.5
1957	204	6.86	58.7	14.6	18.6	108	1,208	1,365	321	13.7	8.91	703	336
1958	10	241	23.4	940	1,499	64.7	30.7	208	23.8	4,734	3.09	118	267
1959	386	2,863	87.8	28.8	37.2	19.7	17.1	83.5	24.0	8.55	2.77	7.29	82.8
1960	200	31.2	1,109	16.7	17.2	31.5	22.1	10.1	201	142	135	14.2	69.7

Monthly and yearly discharge, in acre-feet

1951	29	35	166	300	355	615	416	11,550	14,210	98	399	26,460	54,630
1952	1,230	1,230	852	1,080	2,790	915	3,890	2,140	402	7,000	415	14,610	36,820
1953	466	974	1,510	1,381	956	4,071	3,540	33,350	1,800	1,970	3,100	35,170	85,290
1954	4,690	828	617	613	865	936	3,710	2,700	2,370	467	0	196	17,990
1955	1,330	1,620	570	1,180	4,080	996	725	8,000	3,610	1,180	2,420	1,160	29,870
1956	48	310	721	716	649	652	1,900	3,860	1,290	889	4,180	10,530	25,740
1957	12,560	408	3,610	900	1,040	6,610	71,870	83,900	19,080	845	548	41,830	243,200
1958	6,170	14,330	1,440	57,800	83,230	3,980	1,830	12,770	1,410	2,920	190	7,010	193,100
1959	23,750	17,040	5,400	1,770	2,060	1,210	1,020	5,130	1,430	526	171	434	59,940
1960	12,300	1,860	732	1,030	990	1,940	1,620	619	11,970	5,710	8,330	844	50,640

Yearly discharge, in cubic feet per second

Year	WSP	Water year ending September 30					Calendar year	
		Momentary maximum		Minimum	Mean	Acre-feet	Mean	Acre-feet
		Discharge	Date	day				
1950	—	—	—	—	—	—	40.1	29,040
1951	1212	6,060	Sep 14, 1951	0.2	75.5	54,630	79.7	57,720
1952	1242	4,000	Sep 10, 1952	.6	50.7	36,820	50.2	36,460
1953	1282	6,550	Sep 5, 1953	2.6	118	85,290	122	88.470
1954	1342	1,050	Apr 9, 1954	0	24.8	17,990	21.2	15,380
1955	1392	1,570	Feb 7 1955	.7	41.3	29,870	37.9	27,430
1956	1442	2,960	Sep 3, 1956	0	35.5	25,740	56.8	41,240
1957	1512	8,410	May 29, 1957	1.6	336	243,200	343	248,600
1958	1562	17,500	Feb 23, 1958	1.3	267	193,100	300	217,300
1959	1632	3,830	Oct 31, 1958	1.0	82.8	59,940	39.6	28,640
1960	1712	3,210	Jun 27, 1960	.7	69.7	50,640	—	—

Figure 5- 3: Sample of USGS surface water-supply paper summarizing discharge records (USGS 1964)

When using daily flow records, plot the discharge against time using one of the two ways shown in figure 5-4. In figure 5-4a, the mean daily flows are plotted as point values at midday using a logarithmic scale for discharge and an arithmetic scale for time. In figure 5-4b, both scales are arithmetic. A plotting like figure 5-4a is used in studying low flows or recession curves, and one like figure 5-4b can be used in studying high flows, for showing discharges in their true proportions, or for determining runoff amounts by measurement of areas. If a watershed has a rainfall to runoff response of about 20 hours or more, mean daily amounts are suitable for plotting flood hydrographs because there is little chance that more than one peak occurs in anyone day. Watersheds that have shorter response times have flows that vary more widely during a day, so a hydro graph of mean daily records may conceal important fluctuations. A continuous record of flow should be used instead.

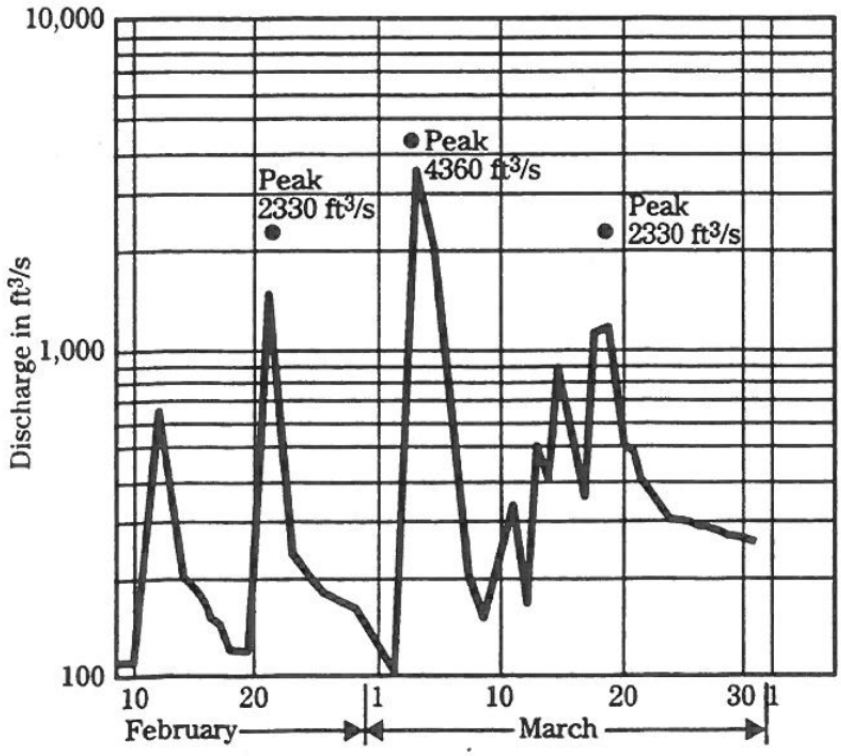

Figure 5- 4a: Daily flow records plotted on logarithmic scale

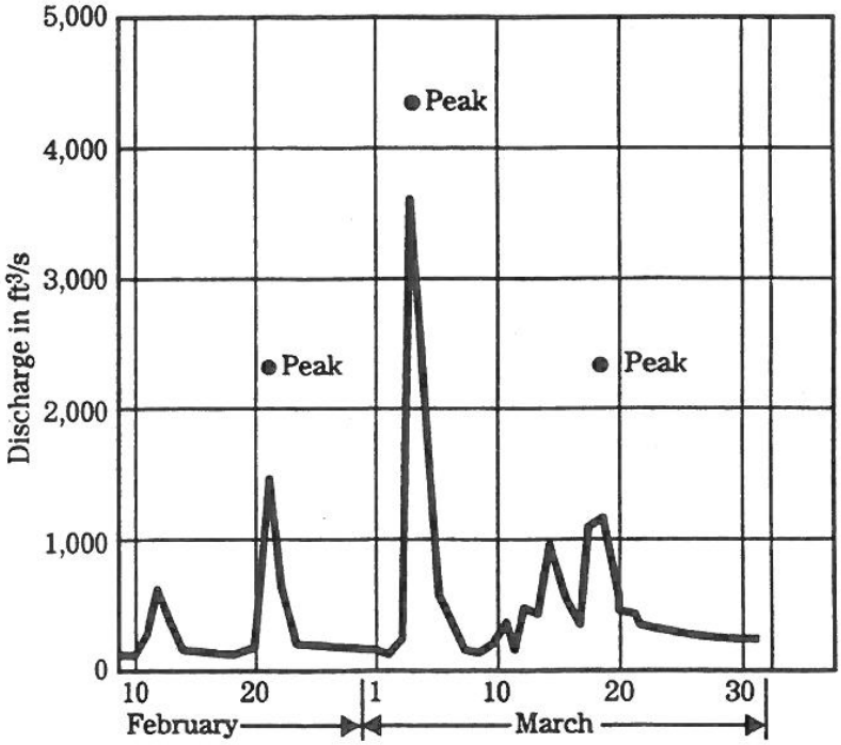

Figure 5- 4b: Daily flow records plotted on arithmetic scale

An important use of mean daily flows is in computing storm runoff amounts including baseflow (example 5-1) or excluding it (example 5-2).

Example 5-1: Total runoff for an annual flood

Determine: Use data in Figure 5-2 to determine total runoff (including baseflow) for the annual flood.

Solution:

1. Identify largest peak flow of the year in Figure 5-2. This is 343 cfs and occurs on December 31.
2. Find the low point of mean daily discharge occurring before the rise of the annual flood. This point occurs on December 28.
3. Find the date on the receding side of the flood when the flow is about equal to the low point of December 28. This occurs on January 9.
4. Add the mean daily discharges for the flood period from December 29 through January 9 (the starred discharges in table 5-1). The sum, which is the total runoff, is **1,941 ft^3/s-day**.

Table 5- 1: Man Daily Discharges, annual flood period (excerpt from Figure 5-2)

Date	Mean daily discharge (ft3/s)	Remarks
Dec. 26	59	Flow from previous rise
27	51	Flow from previous rise
28	47	Low point of flow
29	*63	Rise of annual flow begins
30	*235	Rise of annual flood continues
31	*343	Date of peak rate
Jan 1	*292	Flood receding
2	*210	Flood receding
3	*153	Flood receding

4	*209	Flood receding
5	*146	Flood receding
6	*99	Flood receding
7	*79	Flood receding
8	*63	Flood receding
9	*49	Flood receding
10	40	End of flood period
11	35	Normal streamflow
12	30	Normal streamflow
13	28	Normal streamflow
14	29	New rise begins

*Data used in Example 5-1

Runoff in cubic feet per second per day (ft3/s/d) can be converted to other units using appropriate conversion factors (a table of factors follows chapter 22). For instance, to convert the result in example 5-1 to inches, use the conversion factor 0.03719, the sum of step 4, and the watershed drainage area in square miles (from Figure. 5-2):

$$\frac{0.03719(1941)\,{ft^3}/{(s-day)}}{35\ mi^2} = 2.0625\ in$$

Round this to **2.1 inches**.

If the flow on the receding side does not come down far enough, the usual practice is to

determine a standard recession curve using well-defined recessions of several floods, fit this standard curve to the appropriate part of the plotted record, and estimate the mean daily flows as far down as necessary.

If only the direct runoff (chapter 10) is needed, the baseflow can be removed by anyone of several methods. A simple method assuming continuing constant baseflow may be accurate enough for many situations. This method is used in Example 5-2.

Example 5-2: Direct runoff for an annual flood

Determine: Use data in Figure 5-2 to determine direct runoff (excluding baseflow) for the annual flood. Use total runoff in cubic feet per second-day (ft3/s-day) (excluding baseflow) from Example 5-1 data.

Solution:

1. Determine the average baseflow for the flood period. This is an average of the flows on December 28 and January 9:

$$\frac{(47+49)}{2} = 48\ {ft^3}/{s}$$

2. Compute the volume of baseflow. Table 5-1 shows the flood period (starred discharges) to be 12 days; the volume of baseflow is:

$$12(48) = 576 \, {ft^3}/{(s - day)}$$

3. Subtract total baseflow from total runoff to get total direct runoff:

$$1941 - 576 = 1365 \, {ft^3}/{(s - day)}$$

4. Convert to inches. Use the conversion factor 0.03719 (from conversion table following chapter 22), the total direct runoff in cubic feet per second per day from step 3, and the watershed drainage area in square miles (from the source of data, table 5-2):

$$\frac{0.03719(1365) \, {ft^3}/{(s - day)}}{35 \, mi^2} = 1.4504 \, in$$

Round this to **<u>1.4 inches</u>**.

(c) Transposition of streamflow records

Transposition of streamflow records is the use of records from a gaged watershed to represent the records of an ungaged watershed in the same climatic and physiographic region. Table 5-2 lists some of the data generally transposed and the factors affecting the correlations between data for the gaged and ungaged watersheds. The A means that a considerable amount of analysis may be required before a transposition is

justified. Bulletin 17B, Guidelines for Determining Flood Flow Frequency, contains information and references on such topics as comparing similar watersheds and how to handle flooding caused by different type of events.

Data may be transposed with or without changes in magnitude depending on the kind and the parameters influencing them. Runoff volumes from individual storms, for instance, may be transposed without change in magnitude if the gaged and ungaged watersheds are alike in all respects. If the hydrologic soil- cover complexes (CN) differ though, it is necessary to use Figure 5-5 as shown in Example 5-3.

Example 5-3: Prediction of runoff from an ungaged site using a similar gaged site.

Determine: Determine the runoff from an ungaged site (CN=83) using a comparable gaged watershed (CN=74) that has a direct runoff of 1.6 inches.

Solution:

1. Enter figure 5-5 at runoff of 1.60 inches.
2. Go across to CN 74 and then upward to CN 83.

3. At the runoff scale read a runoff of **2.29** inches.

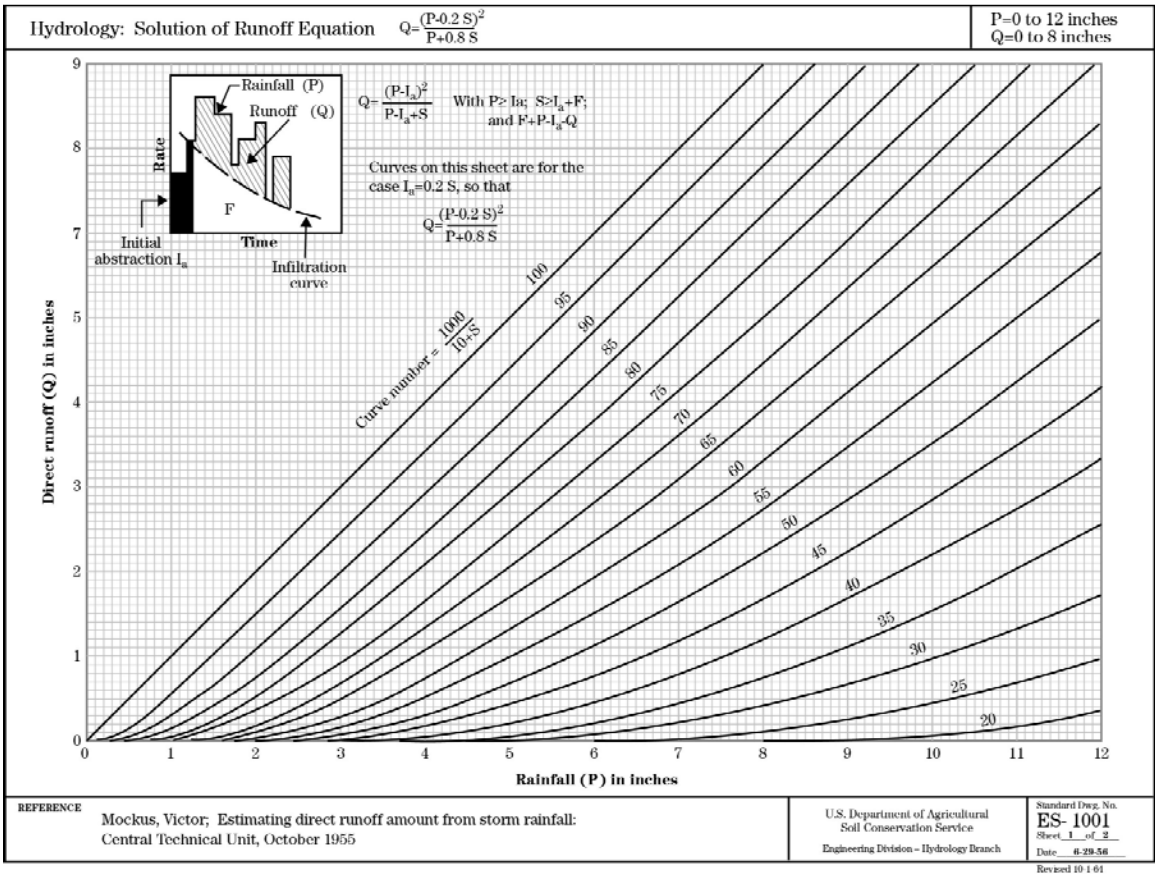

Figure 5- 5: Solution for runoff equation

Transposition of flood dates and number of floods per year is described in chapter 18, and transposition of total and average annual runoff is described in chapter 20.

Table 5- 2: Factors affecting the correlation of data. A guide to the transposition of streamflow.

	Factors – an '**A**' indicates an adverse effect on correlations. If no '**A**' the adverse effect is minor				
Data	Large distance between watersheds	Large difference in sizes of watershed response lag	Runoff from small-area thunderstorm	Large difference in sizes of drainage area	Difference in hydrologic soil cover complexes
Flood Dates	**A**	**A**	**A**	**A**	**A**
Number of floods per year	**A**	**A**	**A**	**A**	**A**
Individual flood, peak rate		**A**	**A**	**A**	**A**
Individual flood, volume			**A**	**A**	**A**
Total annual runoff			**A**	**A**	**A**
Average annual runoff				**A**	**A**

Peak discharge frequency values are often needed at watershed locations other than the gaged location. Peak discharges may be extrapolated upstream or downstream from stream gages for which frequency curves have been determined. In addition, Peak discharges may also be transferred or correlated from gage data of a nearby stream with similar basin characteristics. More information on specific techniques is available in NEH 654.5

(d) Volume-duration-probability analysis

Daily flow records are also used for volume-duration probability [VDP] analysis (USDA 1966 and REC 1975). A probability distribution analysis of the annual series of maximum runoff volume for 1, 3, 7, 15, 30, 60, and 90 days is made (chapter 18). These values are then used for reservoir storage and spillway design (chapter 21). Low flow VDP analysis is made on minimum volumes over selected durations. These values are useful in water quality evaluations, e.g., for determining the probability that the concentration of a substance will be exceeded. They are also used to describe minimum flow for fisheries (USFWS 1976).

(e) Probability-duration analysis

Daily flow records are used for probability-duration analysis to analyze the effects of

inundation on floodplain and wetland ecosystems. Annual 15-day low flow data is used as objective criteria in wetland determinations, for instance. Information on the use of daily flow data for wetland determinations is included in NEH 650 – Chapter 19.

(f) Flow duration curves

Daily flow records are also used to construct flow duration curves. These curves show the percentage of time during which specified flow rates are exceeded (REC 1975). The flow duration curve is one method used to determine total sediment load from periodic samples (USDA 1983). It can also be used for determining loading of other impurities, such as total salts, and can be related to fishery values (USFWS 1976). Flow duration curves are sometimes plotted on probability paper. It should be noted that the value plotted is the percentage of time exceeded, and this should not be confused with probability of occurrence.

(g) Determination of runoff curve numbers

Use of storm rainfall and associated streamflow data for annual floods is the best means of establishing runoff curve numbers, CN. Such curve numbers are superior to those established by other means, such as through the methods described in chapter 9. Two examples are given (example 5-4 and 5-5). The first describes the classical

graphical approach, and the second describes a statistical approach.

Example 5-4: Classical graphical approach to establish runoff curve numbers

Determine: Determine the Curve number (CN) using the classic graphical method. Use the rainfall and runoff data of table 5-3.

Solution:

1. Make a photocopy of Figure 5-5
2. Plot the runoff against the rainfall on the graph as shown in Figure 5-6.
3. Determine the curve of Figure 5-5 that divides the plotted points into two equal groups. That is the median curve number. It may be necessary to interpolate between curves, as was done in Figure 5-6. The curve number for this watershed is **88**.

   Figure 5-6 also shows bounding curves for the data. The curves were determined using the relationship given in table 5-3. Note that these curves generally mark the extremes of the data except for a few outliers.

Example 5-5: Statistical approach to establish runoff curve numbers

Determine: Determine the Curve number (CN) using statistical methods. Use the rainfall and runoff data of table 5-3.

Solution: In this approach, the scatter in the data apparent in Figure 5-6 is

assumed to be described by a log normal distribution about the median. This approach has been explored by Hjelmfelt, et al. (1982), Hjelmfelt (1991), and Hauser and Jones (1991). The curve number determined in example 5-4 was the curve number that divided the points into two equal groups. That is, it is the median curve number. This median value can also be determined using the following computations:

1. Compute the potential maximum retention (S) for each of the annual storms of Table 5-3 using:

$$S = 5(P + 2Q - (\Delta Q^2 + 5PQ)^{1/2})$$

   This equation is an algebraic rearrangement of the runoff equation of chapter 10.

2. The logarithm of each S is taken. Base 10 was used for table 5-3; however, natural logarithms can also be used.

3. The mean and standard deviation of the logarithms of S are determined. The mean of the transformed values, that is mean of log (S), is equivalent to the median of the raw values (Yuan 1933).

$$logS = mean(logS) = \frac{\sum(logS)}{N}$$

$$Std.Dev.(logS) = \sqrt{\frac{\sum(logS - mean(logS))^2}{N-1}}$$

For the data of table 5-3, the values computed are:

mean log(S) = 0.1389

standard deviation log(S) = 0.3452

4. The mean of the logarithms of a lognormally distributed variable is the median of the original variable. Thus, the antilogarithm of the result of the standard deviation equation gives a statistical estimation of the median S. If base 10 logarithms are used:

$$\text{median } S = 10^{\log}$$

$$= 10^{0.1389}$$

$$= 1.3769$$

5. The curve number is then given by:

$$CN = \frac{1000}{10 + S}$$

$$= \frac{1000}{1 + 1.3769}$$

$$\underline{= \mathbf{87.9}}$$

6. Curve numbers for 10% and 90% extremes ofthe distribution are given by

log (S10) = mean (logS) + 1.282 std. dev. (log S)

log (S90) = mean (logS) - 1.282 std. dev. (log S)

in which 1.282 and -1.282 are the appropriate percentiles of the normal distribution. For the data of Table 5-3, the results are **73** and **95**.

Note: These results are in good agreement with the extremes that were determined using the graphical method. Additional conformation that the 10 percent and 90 percent extremes agree with Figure 5-5 is given by Hjelmfelt, et al. (1982) and Hjelmfelt (1991)

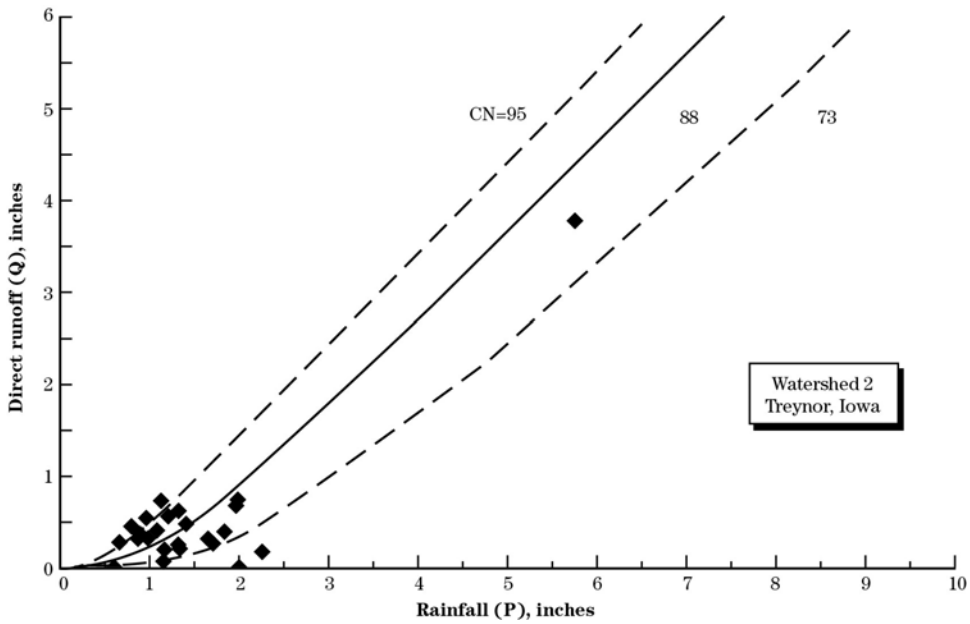

Figure 5- 6: Rainfall versus direct runoff plotted from an experimental ARS watershed in Treynor, Iowa

Table 5- 3: Curve numbers for events with annual peak discharge for Watershed 2 near Treynor, Iowa

Nueces River Basin—2080 Atascosa River at Witsett, TX

Location—Lat. 28°37'20" long. 98°17"05", on right bank 1,400 feet upstream from bridge on Farm Road 99, 0.9 mile west of Whitsett, Live Oak County, and 4 miles downstream from LaParita Creek.
Drainage area—1,171 mi².
Records available—September 1924 to May 1926, May 1932 to September 1960.
Gage—Water-stage recorder and artficial control. Datum of gage is 159.04 feet above mean sea level, datum of 1929. Prior to May 8, 1926, chain gage at bridge 1,600 feet downstream at datu 1.38 feet higher.
Average discharge—29 years (1924-25, 1932-60), 135 ft³/s (97,740 acre-foot per year).
Extremes—1924-26, 1932-60: Maximum discharge, 39,300 ft3/s July 7, 1942 (gage height, 38.3 feet from floodmark), from rating curve extended above 12,000 ft3/s on basis of slope-area measurement at gage height 38.0 feet; no flow at times. Maximum stage since at least 1881, about 41 feet in September 1919.
Remarks—Considerable losses of floodflows into various permeable formations occur upstream from station. June 1951 to May 1958 a considerable part of low flow resulted from flow of several artesian wells near Campbellton, which were drilled by the Lower Nueces River Water Supply District and turned into river to supplement the supply for city of Corpus Christi. Small diversions above station.

Monthly and yearly mean discharge, in cubic feet per second

Water year	Oct	Nov	Dec	Jan	Feb	Mar	Apr	May	Jun	Jul	Aug	Sep	The year
1951	0.47	0.58	2.70	4.88	6.39	10.0	6.98	188	239	1.60	6.49	445	75.5
1952	20.0	20.7	13.9	17.5	48.5	14.9	65.4	39.2	6.76	114	6.74	246	50.7
1953	7.58	16.4	24.6	22.5	17.2	17.4	59.4	542	30.3	32.1	50.4	591	118
1954	76.3	13.9	10.0	9.97	15.6	15.2	62.3	43.8	39.8	7.59	0	3.29	24.8
1955	21.6	27.2	9.27	19.2	128	16.2	12.2	130	60.6	19.2	39.4	19.5	41.3
1956	378	5.21	11.7	11.6	11.3	10.6	31.9	62.8	21.6	14.5	68.0	177	35.5
1957	204	6.86	58.7	14.6	18.6	108	1,208	1,365	321	13.7	8.91	703	336
1958	10	241	23.4	940	1,499	64.7	30.7	208	23.8	4,734	3.09	118	267
1959	386	2,863	87.8	28.8	37.2	19.7	17.1	83.5	24.0	8.55	2.77	7.29	82.8
1960	200	31.2	1,109	16.7	17.2	31.5	22.1	10.1	201	142	135	14.2	69.7

Monthly and yearly discharge, in acre-feet

1951	29	35	166	300	355	615	416	11,550	14,210	98	399	26,460	54,630
1952	1,230	1,230	852	1,080	2,790	915	3,890	2,140	402	7,000	415	14,610	36,820
1953	466	974	1,510	1,381	956	4,071	3,540	33,350	1,800	1,970	3,100	35,170	85,290
1954	4,690	828	617	613	865	936	3,710	2,700	2,370	467	0	196	17,990
1955	1,330	1,620	570	1,180	4,080	996	725	8,000	3,610	1,180	2,420	1,160	29,870
1956	48	310	721	716	649	652	1,900	3,860	1,290	889	4,180	10,530	25,740
1957	12,560	408	3,610	900	1,040	6,610	71,870	83,900	19,080	845	548	41,830	243,200
1958	6,170	14,330	1,440	57,800	83,230	3,980	1,830	12,770	1,410	2,920	190	7,010	193,100
1959	23,750	17,040	5,400	1,770	2,060	1,210	1,020	5,130	1,430	526	171	434	59,940
1960	12,300	1,860	732	1,030	990	1,940	1,620	619	11,970	5,710	8,330	844	50,640

Yearly discharge, in cubic feet per second

Year	WSP	Water year ending September 30					Calendar year	
		Momentary maximum		Minimum	Mean	Acre-feet	Mean	Acre-feet
		Discharge	Date	day				
1950	—	—	—	—	—	—	40.1	29,040
1951	1212	6,060	Sep 14, 1951	0.2	75.5	54,630	79.7	57,720
1952	1242	4,000	Sep 10, 1952	.6	50.7	36,820	50.2	36,460
1953	1282	6,550	Sep 5, 1953	2.6	118	85,290	122	88.470
1954	1342	1,050	Apr 9, 1954	0	24.8	17,990	21.2	15,380
1955	1392	1,570	Feb 7 1955	.7	41.3	29,870	37.9	27,430
1956	1442	2,960	Sep 3, 1956	0	35.5	25,740	56.8	41,240
1957	1512	8,410	May 29, 1957	1.6	336	243,200	343	248,600
1958	1562	17,500	Feb 23, 1958	1.3	267	193,100	300	217,300
1959	1632	3,830	Oct 31, 1958	1.0	82.8	59,940	39.6	28,640
1960	1712	3,210	Jun 27, 1960	.7	69.7	50,640	—	—

630.0504: References

Cayan, D.R., Kammerdiener,M.DettingerD., Caprio, J.M., and Peterson D. H., (2001) Changes in the onset of spring in the western United States. Bull. Am. Met. Soc. 82(3), 399-415

Copeland, R.R, McComas, D. N, Thorne, C. R., Soar, P. J., Jonas, M.M., and Fripp, J.B. (2001) Hydraulic Design of Stream Restoration Projects, USCOE ERDC/CHL TR-01-28.

Dettinger, M.D., Cayan, D.R., McCabe, G.J., and Marengo, J.A., (2000)*, Multiscale streamflow variability associated with El Nino/Southern Oscillation in* Diaz, H.F., and Markgraf, V., eds., El Nino and the Southern Oscillation: New York, Cambridge University Press, p. 114-147.

Hauser, V.L., O.R Jones. 1991. Runoff curve numbers for the southern high plains. Trans. Amer. Soc. Agricul. Engrs., vol. 3, no. 1. pp 142-148.

Hjelmfelt, AT. 1991. An investigation of the curve number procedure. J. Hydraulic Eng., Amer. Soc. Civil Engrs., vol. 117, no. 6, pp 725-737. Hjelmfelt, AT., L.A. Kramer, and RE. Burwell. 1982.

House, P. Kyle, Webb, Robert H., Baker, Victor R., Levish, Daniel R. (edited), (2001), *Ancient Floods, Modern Hazards: Principles and Practices of Paleoflood Hydrology* American Geophysical Union.

Curve numbers as random variables, *Rainfall-runoff relationship.* V.P. Singh, ed., Resources Publications, Littleton, CO, pp. 365-370.

United States Army Corps of Engineers. 1975. Hydrologic engineering methods for water resource development, volume 3. Hydrologic Frequency Analysis, HEC, Davis, CA

United States Department of Agriculture, Agricultural Research Service. 1979. Field manual for research in agricultural hydrology. Agricultural Handbook No. 224.

United States Department of Agriculture, Agricultural Research Service. 1989. Hydrologic data for experimental agricultural watersheds in the United States, 1978-79. Misc. Pub. 1469.

United States Department of Agriculture, Forest Service. Stream-gaging stations for research on small watersheds. K.G. Reinhart and RS. Pierce, Agric. Handb. 268.

United States Department of Agriculture, Soil Conservation Service. 1966. Hydrology study-A multipurpose program for selected cumulative probability, distribution analysis. W.H. Sammons, Natural Resources Conservation Service, SCSTP-148, Washington, DC.

United States Department of Agriculture, Soil Conservation Service. 1980. National

engineering manual, part 630-Hydrology. Natural Resources Conservation Services, Washington, DC.

United States Department of Agriculture, Soil Conservation Service. 1983. Transmission of sediment by water. National Engineering Handbook, Section 3, Sedimentation, Chapter 4, Natural Resources Conservation Service, Washington, DC.

United States Department of Agriculture, Natural Resources Conservation Service. 2012. Stream Restoration Design Handbook 654, Washington, DC.

United States Department of Agriculture, Natural Resources Conservation Service. 2012. Hydrology Tools for Wetland Determinations, National Engineering Handbook 650, Chapter 19, Washington, DC.

United States Fish and Wildlife Service. 1976. Methodologies for the determination of stream resource flow requirements: an assessment. C.B. Stalker and J.L. Arnette (ed.), Office of Biological Services, Utah State University, Logan, Utah.

United States Geological Survey. 1964. Compilation of records of surface waters of the United States, October 1950 to September 1960, 11 Part 8. Water Supply Paper 1732, Western Gulf of Mexico Basin.

United States Geological Survey. 1968. Techniques of water-resources investigations of the U.S. Geological Survey, chapter A7, stage measurement at gaging stations. *In* Book 3, Application of Hydraulics, T.J. Buchanan and W.P. Somers, U.S. Gov. Print. Of., Washington, DC.

United States Geological Survey. 1979. Flow duration curves. USGS Water Supply Paper 1542-A, J.K. Searcy, Washington, DC.

United States Geological Survey. 1981. WATSTORE users guide. USGS Open File Report 79-1336, Washington, DC.

United States Geological Survey. 1982. Guidelines for determining flood flow frequecy. Office of Water Data Coordination. Bulletin 17B.

United States Geological Survey. 1982. Measurement and computation of streamflow, vol. 1: Measurement of stage and discharge, and vol. 2: Computation of discharge. S.E. Rantz and others, USGS Water Supply Paper 2175.

United States Geological Survey. 1994. Water resources data for Indiana, 1973. USGS Surface Water-Supply Papers, prepared in cooperation with the state of Indiana and other agencies.

US Geological Survey, (2002), *The National Flood Frequency Program, Version 3: A Computer Program for Estimating Magnitude and Frequency of Floods for Ungaged Sites*, K.G. Ries III and M.Y. Crouse (compilers), Report 02-4168.