United States Department of Agriculture
Natural Resources Conservation Service

Part 631 Geology
National Engineering Handbook

Chapter 5 Engineering Geology Logging, Sampling, and Testing

(210–VI–NEH, Amend. 55, January 2012)

Issued January 2012

The U.S. Department of Agriculture (USDA) prohibits discrimination in all its programs and activities on the basis of race, color, national origin, age, disability, and where applicable, sex, marital status, familial status, parental status, religion, sexual orientation, genetic information, political beliefs, reprisal, or because all or a part of an individual's income is derived from any public assistance program. (Not all prohibited bases apply to all programs.) Persons with disabilities who require alternative means for communication of program information (Braille, large print, audiotape, etc.) should contact USDA's TARGET Center at (202) 720-2600 (voice and TDD). To file a complaint of discrimination, write to USDA, Director, Office of Civil Rights, 1400 Independence Avenue, SW., Washington, DC 20250–9410, or call (800) 795-3272 (voice) or (202) 720-6382 (TDD). USDA is an equal opportunity provider and employer.

(210–VI–NEH, Amend. 55, January 2012)

Preface

Chapter 5 incorporates information from and replaces the following documents:

- National Engineering Handbook, Section 8, Engineering Geology, 1978
- Soil Mechanics Note 4, Packaging Undisturbed Core Soil Samples, 1973
- Geology Note 4, Photography of Rock Core Samples, 1984
- Geology Note 5, Soil Sample Size Requirements for Soil Mechanics Laboratory Testing, 1991

Issued January 2012

Chapter 5 Engineering Geology Logging, Sampling, and Testing

Contents

631.0500 Introduction **5–1**

631.0501 Safety **5–1**

631.0502 Logging earth materials **5–3**
(a) Graphic logs 5–3
(b) Written logs 5–6
(c) Field notes 5–6

631.0503 Sampling earth materials **5–8**
(a) Exposed profiles 5–8
(b) Soil-sampling tools 5–9
(c) Rock-sampling tools 5–13

631.0504 Samples **5–15**
(a) Soil sample size requirements for soil mechanics laboratory testing 5–15
(b) Sample documentation 5–15
(c) Determining sampling needs 5–15
(d) Undisturbed samples 5–19
(e) Disturbed samples 5–20
(f) Disposition of rock cores 5–24

631.0505 Testing earth materials **5–27**
(a) Test holes 5–27
(b) Standard penetration test (SPT) 5–30
(c) Vane shear test 5–32
(d) Cone penetrometer testing 5–32
(e) Geophysical methods and remote sensing 5–32
(f) Permeability investigations 5–36

631.0506 References **5–48**

Tables

Table 5–1	Recommended scales for plotting logs of earth materials	5–4
Table 5–2	Abbreviations for sampling methods used in logs of field testing and sampling	5–6
Table 5–3	Log entries of earth materials	5–7
Table 5–4	Soil types and sampling tools	5–10
Table 5–5	Sample size for soil test requirements	5–16
Table 5–6	Minimum field-sample size for various gradations of material	5–17
Table 5–7	Capacity of various sample bags	5–23
Table 5–8	Standard penetration resistance	5–30
Table 5–9	Geophysical methods, applications, and limitations	5–34
Table 5–10	Typical sound-travel velocities of earth materials	5–35
Table 5–11	Representative values of resistivity of earth materials	5–36
Table 5–12	Temperature correction factors, C_t, for use in well permeameter calculations for hydraulic conductivity (K)	5–45
Table 5–13	Minimum volume, in gallons, to be discharged in well permeameter, where $Y_s = 0.35$	5–46

Figures

Figure 5–1	Example of a geologic profile	5–5
Figure 5–2	Shelby tube sampler mounted to a backhoe bucket	5–9
Figure 5–3	Thin-wall open-drive sampler	5–9
Figure 5–4	Stationary-piston sampler	5–11
Figure 5–5	Double-tube soil core barrel (Denison)	5–12
Figure 5–6	Swivel-type, double-tube rock core barrels	5–13
Figure 5–7	Diamond bits and reaming shells	5–13
Figure 5–8	Diagram of wireline core barrel sampler	5–14

Figure 5–9	Shipping containers for undisturbed samples	5–21
Figure 5–10	Expanding packer for sample tube	5–23
Figure 5–11	Setting up rock core boxes for photographing	5–25
Figure 5–12	Rock core sampling information on inside lid of core box	5–25
Figure 5–13	Sample data inscription on core box end	5–25
Figure 5–14	Sample photograph of core box	5–25
Figure 5–15	Portable core box rack	5–26
Figure 5–16	ODEX drilling sequence	5–29
Figure 5–17	Extruded sample obtained through sonic drilling	5–29
Figure 5–18	Split-tube or split-barrel sampler	5–31
Figure 5–19	Vane shear tester plus pocket version	5–32
Figure 5–20	Cone penetrometer tip	5–33
Figure 5–21	Dimension and measurements taken by the standards 10-cm^2 and 15-cm^2 pentrometers, ASTM D5778	5–33
Figure 5–22	Remote sensing tools used by NRCS	5–35
Figure 5–23	A simplified seismic refraction test (USBR)	5–35
Figure 5–24	Diagram of resistivity apparatus	5–36
Figure 5–25	Typical hydraulic conductivity (K) values for consolidated and unconsolidated aquifers (After Freeze and Cherry 1979)	5–37
Figure 5–26	Sample plots of pressure-testing data	5–39
Figure 5–27	Pressure testing toole	5–40
Figure 5–28	Open-end permeability test	5–41
Figure 5–29	Packer-type permeability test	5–42
Figure 5–30	Well-permeameter test	5–44

Exhibit 5–1	OSHA trenching safety requirements	5–2

Chapter 5 Engineering Geology, Logging, Sampling , and Testing

631.0500 Introduction

This chapter briefly outlines geological investigation methods, equipment, and sampling for use by geologists and others in designing conservation practices and systems.

631.0501 Safety

All safety practices and procedures currently established by safety handbooks and guides of the Natural Resources Conservation Service (NRCS) must be adhered to in field operations. Emphasis on safety measures regarding drilling investigation crews should be on the use of safety helmets and other protective devices such as gloves and hard-toed shoes. Personnel operating drill rigs or other persons whose duties require close proximity to machinery in operation or transit should not wear loose clothing. Machinery in operation should be equipped with safety guards in working order on any moving parts.

Equipment operators should not run the equipment in excess of the limits of capability and safety as established and designated by the manufacturer. Equipment should not be presumed to be in safe operating condition unless it has been adequately checked by a competent, responsible person.

Regular condition checks should be made on all equipment and the results reported. Caution must be used when operating equipment in the vicinity of power transmission lines.

All underground utility lines should be located prior to a subsurface investigation. Contact location services as required by State and local laws in the required time in advance of any investigation.

Wire ropes or cables used with truck winches frequently are broken. People should stay well clear of the reach of the cable during operations of the winch.

Crews using geophysical instruments or making other investigations involving explosive charges should be well acquainted with the precautions necessary to avoid accidents and the Federal, State, local, and tribal permits required.

Where trench or pit excavations require side supports of cribbing, determine that the material for the cribbing is of adequate strength and is installed so that slumping, caving, and sliding cannot occur. Exhibit 5–1 summarizes OSHA trench safety requirements and should be copied and reviewed with all personnel

involved in geologic investigations that involve trenching or pitting.

Test holes should be covered each day and plugged level with the surface when the site investigation is completed. An open hole is a potential danger to people and livestock. Test pits and trenches should be leveled also when site investigations are completed.

Caution should be exercised in the handling of radioactive materials and caustic, toxic, or flammable chemicals.

Snakebite kits are required in poisonous snake-infested areas. Caution should be exercised when moving drilling equipment on roads, streets, and highways. Bran or other grain derivatives never should be added to drilling mud since this mixture is detrimental to livestock.

Dye tracers to be used in groundwater must be nontoxic to both humans and livestock.

Exhibit 5–1 OSHA trenching safety requirements

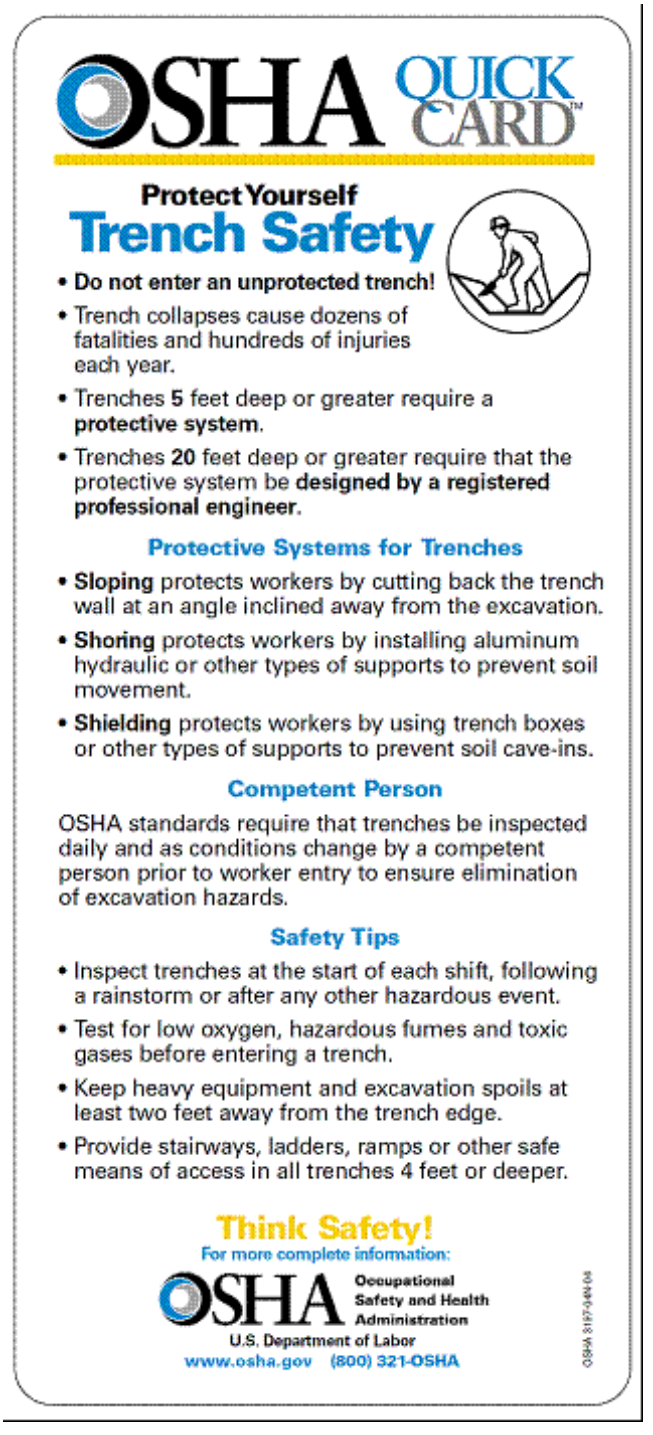

OSHA QUICK CARD™

Protect Yourself

Trench Safety

- **Do not enter an unprotected trench!**
- Trench collapses cause dozens of fatalities and hundreds of injuries each year.
- Trenches **5** feet deep or greater require a **protective system**.
- Trenches **20** feet deep or greater require that the protective system be **designed by a registered professional engineer**.

Protective Systems for Trenches

- **Sloping** protects workers by cutting back the trench wall at an angle inclined away from the excavation.
- **Shoring** protects workers by installing aluminum hydraulic or other types of supports to prevent soil movement.
- **Shielding** protects workers by using trench boxes or other types of supports to prevent soil cave-ins.

Competent Person

OSHA standards require that trenches be inspected daily and as conditions change by a competent person prior to worker entry to ensure elimination of excavation hazards.

Safety Tips

- Inspect trenches at the start of each shift, following a rainstorm or after any other hazardous event.
- Test for low oxygen, hazardous fumes and toxic gases before entering a trench.
- Keep heavy equipment and excavation spoils at least two feet away from the trench edge.
- Provide stairways, ladders, ramps or other safe means of access in all trenches 4 feet or deeper.

Think Safety!

For more complete information:

OSHA Occupational Safety and Health Administration
U.S. Department of Labor
www.osha.gov (800) 321-OSHA

OSHA 3197-04N-04

631.0502 Logging earth materials

Logging is the recording of data concerning the materials and conditions in individual test holes, pits, trenches, or exposures. Logging must be accurate so that the results can be properly evaluated to provide a true concept of subsurface conditions. It is equally imperative that recorded data be concise, complete, and presented in descriptive terms that are understood and evaluated in the field, laboratory, and design office. Logging is the geologic description of the material between specified depths or elevations. This description includes information such as name, texture, structure, color, mineral content, moisture content, relative permeability, age, and origin, plus any information that indicates engineering properties of the materials. Examples are gradation, plasticity, and the Unified Soil Classification System (USCS) symbol. In addition, the results of any field tests such as the standard penetration test (SPT) blow count must be recorded along with the specific vertical interval tested.

Information should be plotted to scale and located both vertically and on the applicable cross section or profile on form SCS–35 or equivalent. Correlation and interpretation of these graphic logs indicate the need for any additional test holes and their location, permit the plotting of stratigraphy and structure, and are the basis for development of complete geologic profiles.

(a) Graphic logs

Graphic logs are plotted at their correct location and elevation on forms NRCS–35A, 35B, and 35C, Plan and Profiles for Geologic Investigation, or their equivalents. Graphic logs must be plotted to scale and accurate elevation. Use mean sea level (MSL) for the reference plane, if possible, or an assumed datum if MSL is not known. Graphic columns that are off the centerline profile may show as being above or below the ground level of the profile, depending on the ground elevation of the boring. In this event, make a notation at the top of the column that shows the location relative to the centerline of the profile.

Indicate the location of the static water table by a tick mark at the correct elevation and record the date of measurement. Show the USCS symbol next to each stratum on the graphic column as a further guide to interpretation and sample requirements. To left of the graphic log, record the SPT blow count opposite the specific horizon tested. Use adjectives and their abbreviations given in the legend on form SCS–35A or equivalent for other salient features of the material, for example, wet, hard, mas. (massive). On both plans and profiles, number the holes according to their location. Use the numbering system from NEH631.02, table 2–2. On plans, show the location of holes by the proper symbol and indicate whether the hole was sampled.

(1) Recommended scales

The horizontal scale used should allow the graphic logs to be spaced far enough apart for the necessary information to be shown legibly. The vertical scale used should also allow the vertical sequence to be depicted adequately. The scales shown in table 5–1 are recommended for the different features of a site.

(2) Geologic profile

Develop tentative correlation lines as soon as possible. This helps to determine where additional test holes are needed. As more graphic logs are plotted, the stratigraphic relationships become more definite.

Interpretation of data in terms of the genetic classification of the deposits helps to establish correlation. Conversely, development of the geologic profile often helps to interpret the origin of the deposits. When the geologic profile is complete, it provides an interpretation of the factual information from the logs in terms of the stratigraphic and structural relationships along the plotted profile. To this profile, add notations on important conditions or characteristics such as groundwater level, permeability, density, genesis, sorting, degree of weathering or cementation, upstream and downstream mineralogy, and rock structure.

Figure 5–1 shows part of the geologic profile along the centerline of a proposed structure and illustrates some of these points. Plot profiles or sections drawn normal to the direction of streamflow as though the observer is looking downstream. Plot those drawn parallel to the direction of streamflow so that streamflow is from left to right.

Table 5–1 Recommended scales for plotting logs of earth materials

Vertical	1 in = 10 ft increase to 1 in = 5 ft for special situations, such as complex logs where thin horizons need to be delineated accurately		
Horizontal	Plan of site (all components)		1 in = 100 ft
	Profiles	Centerline of dam, auxiliary spillway, and borrow grids	1 in = 100 ft
		Centerline of principal spillway and the stream channel below the outlet end of the principal spillway	1 in = 50 ft
		Centerline of foundation drains, relief-well collector lines, and sediment-pool drain lines	1 in = 50 ft
		Cross section of stream channel	1 in = 20 ft. A scale that requires no more than 2 in for the plotted bottom width and no more than 6 in for the entire cross section
		Cross section of auxiliary spillway	1 in = 20 ft to 1 in = 100 ft. A scale that results in a plotted bottom width of at least 2 in

Figure 5–1 Example of a geologic profile

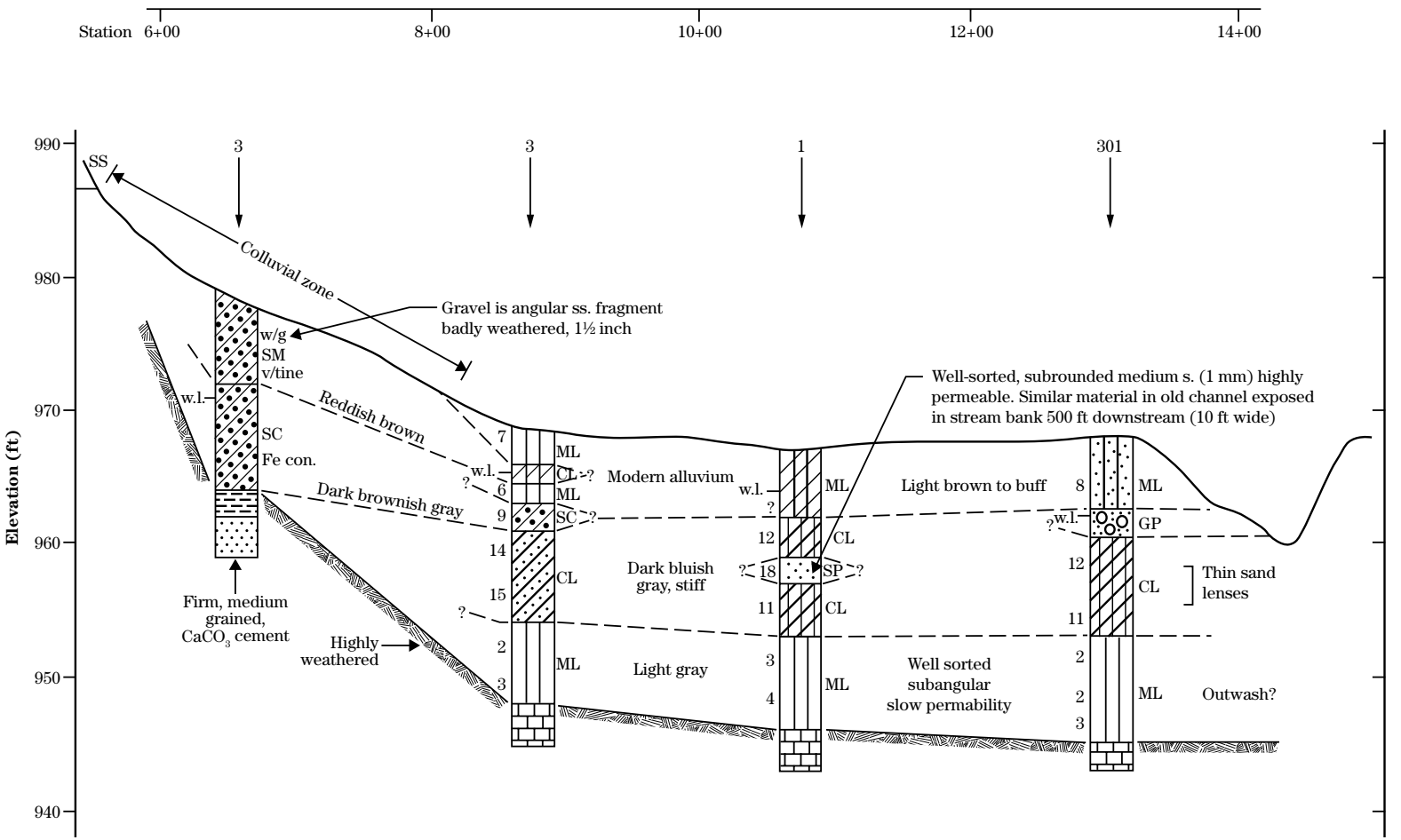

(b) Written logs

Form SCS–533

For written logs for engineering purposes, use Form SCS–533, Log of Test Holes, and Form SCS–533A, Continuation Sheet. These logs are prepared from field notes and are limited to factual information and data collected. These detailed logs include common narrative descriptions of the materials in easily understood terms.

Form SCS–533 provides space for the test hole number, location, and surface elevation. Several logs may be shown on each sheet of form SCS–533. Where natural outcrops, streambanks, and gullies are used for logging and sampling, determine the elevation of the top of the outcrop and the location of the outcrop.

For "Hole Depth," show the depth in feet from the surface (0.0) to the bottom of the first stratum, or the depth from top to bottom of any underlying stratum. The description of materials should be complete, clear, and concise. Give the geologic designation that corresponds to the standard pattern used on the graphic log first and underline it, for example, "Gravel, silty."

Describe the sample particle size, shape, and composition. Include the approximate diameter of the average maximum-size particle. If possible, indicate the relative proportion of gravel, sand, silt, and clay. Describe particle shape as angular, subangular, and rounded. Note the principal constituents of the larger particles, such as gneiss, limestone, granite, sandstone, and quartz. Indicate the presence of diatoms, gypsum, iron oxides, organic matter, platy minerals such as micas, and others that may have an influence on engineering properties.

Record color, consistency, and hardness. For fine-grained soils, note relative plasticity, dry strength, and toughness. Indicate the relationships shown by stratification, such as "varved clay" and "interbedded sand and gravel." Indicate the presence of joints and their kind, spacing, and attitude if they can be determined. Indicate consistency or degree of compactness of the materials. Record the SPT blow count. Where possible, note the genesis, such as alluvium, lake deposits, and glacial till.

For consolidated rock, include kind of rock, degree of weathering, cementation, and structural and other features in the description. Include the geologic name and age of the formation if it is known. Use the scale of rock strength to describe the ease of excavation. Show the USCS symbol as determined by field tests. A column is provided for a description of type and size of sampler used for sampling or advancing a hole. Examples are bucket auger, tube, stationary-piston sampler, double-tube soil-core barrel type, or double-tube rock-core barrel. The abbreviations that should be used for the different types of samplers are given in the following list in table 5–2.

Columns are provided for sample data. It is important to show the sampling horizon and whether the sample is disturbed (D), undisturbed (U), or rock core (R). Show the sample recovery ratio (S), which is equal to L/H where L is the length of sample recovered and H is the length of penetration, as a percentage. This may be an important factor in the determination of fissures, cavities, or soft interbedded materials in consolidated rock.

(c) Field notes

Data can be logged directly on the standard form or in a separate notebook. Field notes should contain all the data for both graphic and written logs and also any information used to make interpretations but not entered in the log. Items to be considered in logging a test hole are shown in table 5–3. Original field notes and logs must be preserved in the project file.

Table 5–2 Abbreviations for sampling methods used in logs of field testing and sampling

Sampling method	Abbreviation
Bucket auger	BA
Thin-wall open-drive (Shelby)	S
Split-tube sampling spoon	SpT
Stationary piston	Ps
Piston (Osterberg type)	Pf
Dry barrel	DB
Double-tube soil-core barrel (Denison)	D
Single-tube rock-core barrel	RCs
Double-tube rock-core barrel	RCd
Hand cut	HC

Table 5–3 Log entries of earth materials

Item	Description
Hole number, location, and surface elevation	Number holes in the sequence in which they are drilled within each area of investigation. These areas have been assigned standard hole numbers. Show test hole location by station number or by reference to a base. Show elevation above MSL, if it is known, or elevation from an assumed datum.
Depth	Record the depth to the upper and lower limits of the layer being described.
Name	In unconsolidated materials, record the name of the primary constituent first, then as a modifier the name of the second most prominent constituent; for example, sand, silty (two constituents are enough). If it is desirable to call attention to a third, use the abbreviation w/ after the name; for example, sand, silty w/cbls (with cobbles).
Texture	Record size, shape, and arrangement of individual minerals or grains. In consolidated rock, descriptive adjectives are usually sufficient. In unconsolidated material, use descriptive adjectives for size and give an average maximum size in inches or millimeters. Record shape by terms such as equidimensional, tabular, and prismatic and by the degree of roundness. Record arrangement by estimated relative amounts. Record the gradation for coarse-grained, unconsolidated materials and the sorting for poorly graded materials.
Structure	Describe features of rock structure observed, such as bedding, laminations, cleavage, jointing, concretions, or cavities. Where applicable, include information on size, shape, color, composition, and spacing of structural features.
Color	Record color for purposes of identification and correlation. Color may change with water content.
Moisture content	Note whether the material is dry, moist, or wet.
Mineral content	Record identifiable minerals and the approximate percentage of the more abundant minerals. Describe any mineral that is characteristic of a specific horizon and record its approximate percentage even though it occurs in very minor amounts. Record the kind of cementation if present.
Permeability	Estimate the relative permeability and record it as impermeable, slowly permeable, moderately permeable, or rapidly permeable. If a field permeability test is run, describe the test and record the results.
Age, name, and origin	Record geologic age, name, and origin, for example, Jordan member, Trempeleau Formation, Cambrian age; Illinoian till; Recent alluvium. Use the term “modern” for sediments resulting from culturally accelerated erosion. Distinguish between Recent and modern deposits. For valley sediments, record its apparent genesis. Such identification helps in correlation and in interpreting data from test holes. Similarly, knowing that a material is of lacustrine or eolian origin or that it is a part of a slump or other form of mass movement helps in evaluating a proposed structure site.
Strength and condition of rock	Record rock condition by strength, degree of weathering, and degree of cementation.
Consistency and degree of compactness	Describe consistency of fine materials as very soft, soft, medium, stiff, very stiff, and hard. Describe degree of compactness of coarse-grained soils as very loose, loose, medium, dense, and very dense.
USCS symbol	Assign a USCS symbol for all unconsolidated materials. Borderline materials are given hyphenated symbols, such as CL–ML and SW–SM. Ordinarily, this borderline classification cannot be determined in the field. If there is doubt about the proper classification of material, record it as “CL or ML” and “SW or SM” and not by the borderline symbols. Record the results of field-identification tests, such as dilatancy, dry strength, toughness, ribbon, shine, and odor.
SPT blow count	For standard penetration test (SPT), record the results and the test elevation or depth. See section on SPT later in this chapter for SPT procedures. This test shows the number of blows under standard conditions that are required to penetrate 12 inches or, with refusal, the number of inches penetrated by 100 blows. The latter is commonly recorded as 100/d, where d equals the number of inches penetrated in 100 blows.
Other field tests	If other field tests are made, record the results and describe each test completely. Examples are vane-shear test, pressure test, field density test, field tests for moisture content, acetone test, and the use of an indicator such as sodium fluorescein dye to trace the flow of groundwater.
Miscellaneous information	Record any drilling difficulties, core and sample recovery, losses, and reasons for losses, type and mixture of drilling mud used to prevent caving or sample loss, loss of drilling fluid, and any other information that may help in interpreting the subsurface condition.
Water levels	Record the static water level and the date measured. Wait at least 1 day after the hole has been drilled to measure the water level to allow time for stabilization.

631.0503 Sampling earth materials

(a) Exposed profiles

(1) Natural exposures

A complete investigation of earth materials in natural exposures at the surface is necessary to provide a basis for guiding subsurface investigations, testing, and sampling. Natural exposures, when described in detail, serve the same purpose as other logs in establishing stratigraphy and other geologic conditions. A fresh surface is required for the preparation of adequate descriptions. An ordinary hand shovel or geologist's pick may be required for preparing the surface of a natural exposure for accurate logging.

(2) Trenching and test pitting

Trenching and test pitting are simple methods of shallow exploration of easily excavated rock or soil materials. Visual inspection of a wide section of strata is of great value in logging profiles and selecting samples. If bedrock is anticipated at a shallow depth, trenches and test pits should be located on the centerline of the proposed structure and dug parallel with it. If bedrock is not at shallow depths, deep trenches or test pits should be offset from the centerline to avoid damaging the foundation of the structure. Shallow trenches or test pits may be dug adjacent to the centerline for correlation purposes.

Where pits or trenches penetrate or pass through foundation materials, trenches are backfilled and compacted to the density of the original in-place material. It is recognized that certain limitations exist in the use of trenching and test-pit excavating equipment for compacting fill material. However, every practical effort should be made to reestablish the in-place densities of foundation materials.

Trenches—Trenches are long, narrow excavations. They are advantageous for studying earth materials on steep slopes and in exposed faces. Trenches made by power equipment, such as backhoes, power shovels, and bulldozers, may require hand trimming of the sides and bottom to reach relatively undisturbed material. The method is of particular value in delineating the rock surface beneath the principal spillway and in abutments and in exploring auxiliary spillway materials. Trenching may be the most feasible method of investigation in materials containing cobbles or boulders. Trenches may yield valuable information on potential rock excavation and core trench depth along the centerline of the structure, depending on its design.

Test pits—Test pits are large enough to accommodate a person with sampling equipment. They may be excavated by hand or by power equipment such as a clamshell or orange-peel bucket. Power equipment should be used only for rough excavation and with extreme caution when approaching the depths at which undisturbed samples are to be taken. Cribbing is required in trenches and pits of depths of 5 feet or greater (see exhibit 5–1).

(3) Procedures for obtaining undisturbed samples from exposed profiles

Undisturbed hand-cut samples can be obtained from exposed profiles above the water table. Undisturbed samples may be obtained as box, cylinder, or chunk samples.

Box samples are hand-cut and trimmed to cubical dimensions and placed in individual boxes for handling and shipping. They should have a minimum dimension of 6 inches.

Cylinder samples from 4 to 8 inches in diameter and 6 to 12 inches long can also be hand-cut by sliding a cylinder over a column of soil, which is trimmed to approximate size in advance of the cylinder. Cylinder samples may also be obtained by jacking or otherwise pushing drive samples into exposed surfaces using a continuous steady pressure. Hydraulic power equipment may also be used to push Shelby tubes into exposed undisturbed soil to collect undisturbed samples, such as the sampler mounted on a backhoe in figure 5–2.

Chunk samples are of random size and shape and are broken away from the soil mass with or without trimming.

They are difficult to package and ship but are simple to obtain.

Figure 5–2 Shelby tube sampler mounted to a backhoe bucket

Figure 5–3 Thin-wall open-drive sampler

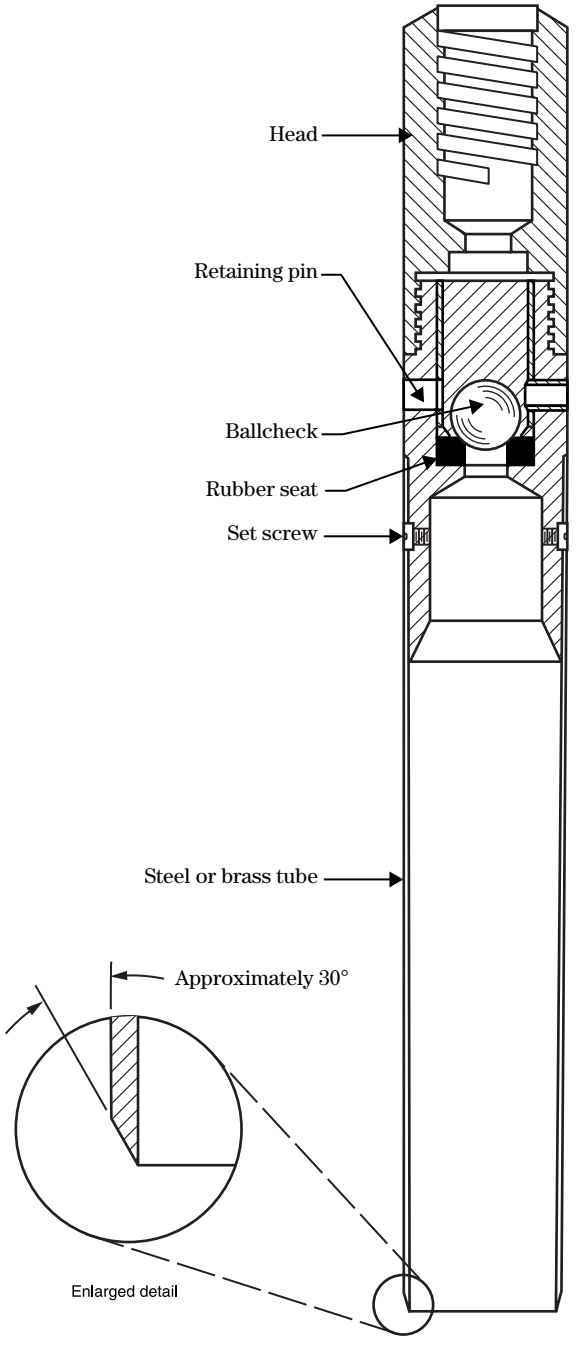

(b) Soil-sampling tools

(1) Open-drive and piston samplers

Open-drive samplers are cylindrical samplers which are pushed or driven into the materials to be sampled. A drive sampler equipped with a piston is known as a piston sampler. A large number of drive and piston samplers are available on the market. They are manufactured in a variety of diameters, tube thicknesses, and tube lengths. They are generally known as thick-wall, thin-wall, and split-barrel.

Thin-wall open-drive samplers consist of solid thin-wall barrels. These are manufactured in a variety of lengths, diameters, and wall thicknesses. They must be equipped with bail or other types of check valves for satisfactory performance. The simplest type of open drive sampler is the so-called thin-wall Shelby Tube (fig. 5–3). It should be obtained in steel tubing lengths of 24 inches and from 3 to 5 inches in diameter. The tube is attached to a head assembly by means of set screws. This head assembly contains a ball check valve. After the sample is obtained, the tube is detached from the head, sealed, and shipped to the laboratory where the sample is removed for conducting tests.

Table 5–4 shows soil types and sampling tools.

Table 5–4 Soil types and sampling tools

Type of soil	Sampling tools	
	Logging or disturbed samples	Undisturbed samples
Common cohesive and plastic soils	Bucket-type augers,[1/] all types of drive samplers, dry barrel	Thin-wall open-drive sampler, piston sampler, double-tube core barrel
Slightly cohesive and brittle soils including silt and loose sand above the water table	Same as above	Thin-wall open-drive samplers, piston samplers below water table, double-tube soil core barrel (with liner)
Very soft and sticky soils	Closed bucket auger,[1/] dry barrel, piston sampler or open drive with core retainers	Thin-wall or piston samplers
Saturated silt and loose sand	As above, overdrive push-tubes to retain sample	Piston sampler with heavy mud
Compact or stiff and brittle soils including dense sands, partially dried soils	Bucket-type auger,[1/] thick-wall drive sampler	Double-tube soil core barrel
Hard, highly compacted, or partially cemented soils, no gravel or cobbles	Bucket auger,[1/] thick-wall drive sampler and hammer, double-tube core barrel	Double-tube soil core barrel
Coarse, gravelly, and stony soils including compact and coarse till	Bucket auger,[1/ 2/] large diameter thick wall drive sampler	Not practical (advance freezing and core)
Organic clay, silt, or sand	As above according to basic soil type	Thin-wall piston, measure length of drive and original volume of sample carefully

1/ Homogeneous soils only
2/ Power equipment, such as backhoes or bulldozers, may be more suitable

(2) Thin-wall open-drive samplers

Thin-wall samplers do not have cutting shoes, but rather a sharpened cutting edge. To provide clearance in certain materials, the edge may be swaged to cut a sample smaller than the inside diameter. Thin-wall drive-samplers provide good undisturbed samples of certain soil materials if proper methods of operation are used. The sampler must be advanced by a uniform and uninterrupted push without rotation. No additional drive should be made after the sampler stops.

Thin-wall open-drive sampling methods are most practical in fine-grained, plastic, or peaty soils. The method is not suited for sampling brittle, cemented, or gravelly soils. The amount of disturbance in drive samples depends on the dimensions of the sample tube. The thinner the wall and the larger the diameter, the less the disturbance.

Extruded samples are excellent for logging purposes. If desired for this purpose, the drill rig must be equipped with a sample ejector. The sample should be extruded through the top of the sampler. Undisturbed samples for laboratory analysis should not be removed from the sampling tube in the field, but sealed in the tube and the tube sent to the laboratory. Either 3-inch or 5-inch-diameter undisturbed samples should be taken, depending on the type of laboratory test desired.

(3) Piston-drive samplers

Piston-drive samplers are thin-wall samplers similar to Shelby thin-wall samplers, but contain a piston to facilitate sampling. It is designed to obtain samples of soft or medium soils and for obtaining samples of sands, silts, and cohesive soils below the water table. The stationary-piston sampler (fig. 5–4) is lowered to the bottom of the test hole with the piston held in the lower end of the sampler. The piston is then locked into position by means of actuating rods which extend to the surface within the drill rods. The tube is then forced into the materials by steady pressure, while the piston remains stationary at constant elevation to obtain the sample.

The sampler is equipped with a vented head to permit escape of air above the piston. The piston creates a vacuum that holds the sample in the tube while it is being brought to the surface. Stationary-piston samplers are available in sizes up to 30 inches in length with I.D. up to 4 3/8 inches. A modification of the above sampler (Osterberg type) requires lowering of the sampler in the test hole and hydraulically forcing the sampling tube into the soil. This type of sampler is available in 3-inch and 5-inch diameters.

(4) Split-barrel sampler

The split-barrel sampler consists of a head, barrel, and cutting shoe. The barrel is split longitudinally so that it can be taken apart after removal of the head and the shoe, and the sample removed for visual inspection or packing in jars or other containers for shipment to the laboratory. The split-tube sampler can withstand hard driving into soil materials. Since cutting shoes often become damaged by driving, a supply of additional cutting shoes should always be available in the field.

Figure 5–4 Stationary-piston sampler

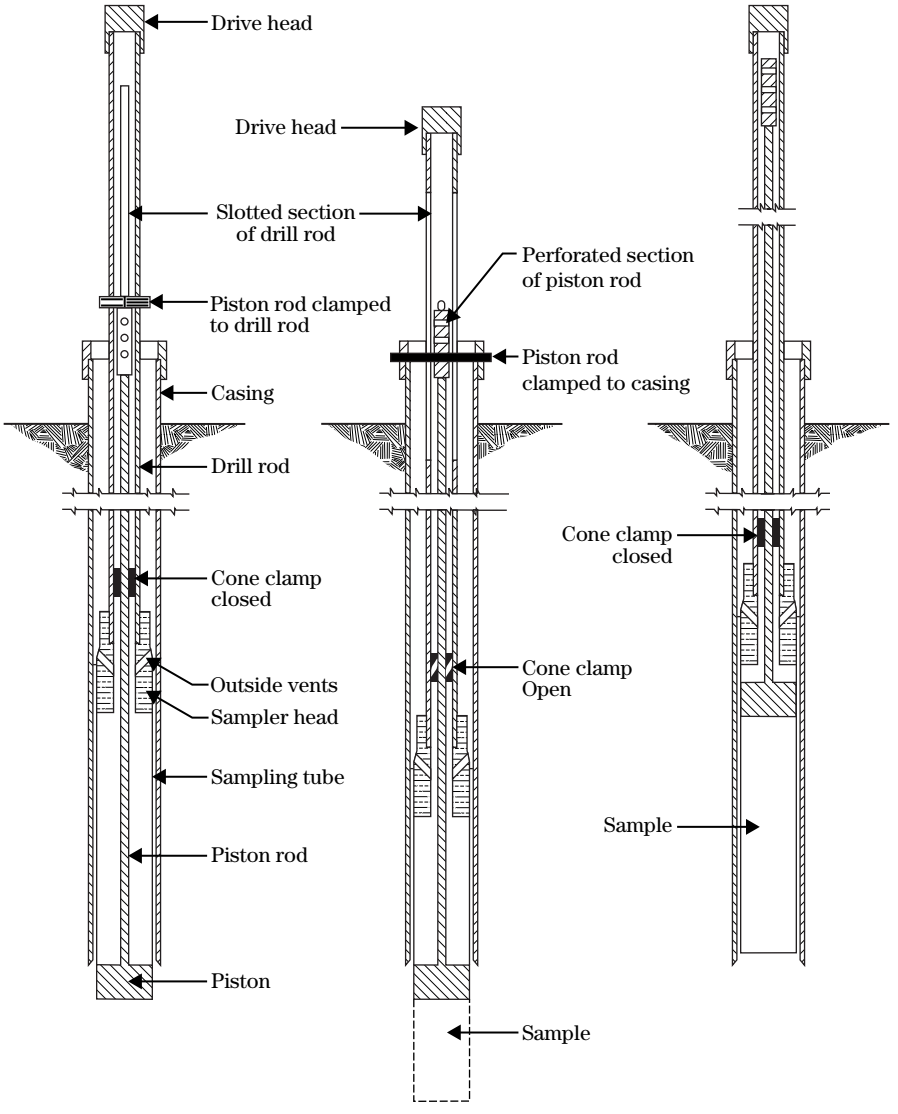

See section 631.0505(b), Standard Penetration Test, for more information on the split-tube sampler.

Split-tube samplers may be obtained in lengths up to 24 inches. The 4-inch O.D. sampler is recommended for logging purposes and is required for the standard penetration test. It is not suitable for taking an undisturbed sample because of sample disturbance due to the thick cutting shoe and driving action of the hammer. Split-barrel samplers are adapted for accurate logging of thin-bedded materials.

(5) Double-tube soil core barrel (Denison type)

The most satisfactory sampler for obtaining nearly undisturbed soil samples of highly compacted, hard, stiff, uncemented, or slightly cemented materials is the double-tube soil core barrel with liner (fig. 5–5). Samples of cohesive soils are obtained with a double-tube soil core barrel with the least amount of disturbance.

Double-tube samplers can be used to sample a wide variety of materials including some rock, such as soft shales and soft and friable sandstones. The method is not satisfactory for obtaining undisturbed samples of soft, loose, cohesionless silts and sands below the water table, or very soft and plastic cohesive materials where the structure is destroyed by core barrel whip. Core barrel whip occurs when the bit of a core barrel cuts a larger hole than the diameter of the barrel. This oversized hole can cause the barrel to vibrate (whip) in the hole during drilling.

It is not suitable for obtaining undisturbed samples of gravels and cobbles. The double-tube soil core barrel is advanced by rotating the outer barrel, which cuts a circular groove and loosens the soil material to be displaced by the two barrels. Drilling fluid is forced downward through the drill stem between the barrels and carries the cuttings to the surface outside the tubes and drill stem. The inner barrel, which does not rotate, moves downward over the undisturbed sample being cut by the rotating outer barrel. A liner is inserted in the inner barrel before the barrel is assembled. After drilling the required length, the sampler is withdrawn and the liner removed and prepared for shipping.

Basket or spring-type core retainers may be used. Several types, using a different number and flexibility of springs, are available for use in different materials. The tapered, split-ring core retainer used in rock core barrels is not satisfactory for use in soil. A check valve is provided to relieve pressure over the core. The coring bits used usually have hard-surfaced steel teeth.

Double-tube soil core barrels with liners come in various sizes which obtain untrimmed soil samples ranging from 4-3/4 inches to 6 inches in diameter. The diameter of undisturbed core needed depends on the kind of laboratory test required. Core barrels which obtain undisturbed samples of about 2 feet in length are recommended. Sectional liners are recommended for use in Denison-type core barrels when taking undisturbed samples for laboratory analyses.

Figure 5–5 Double-tube soil core barrel (Denison)

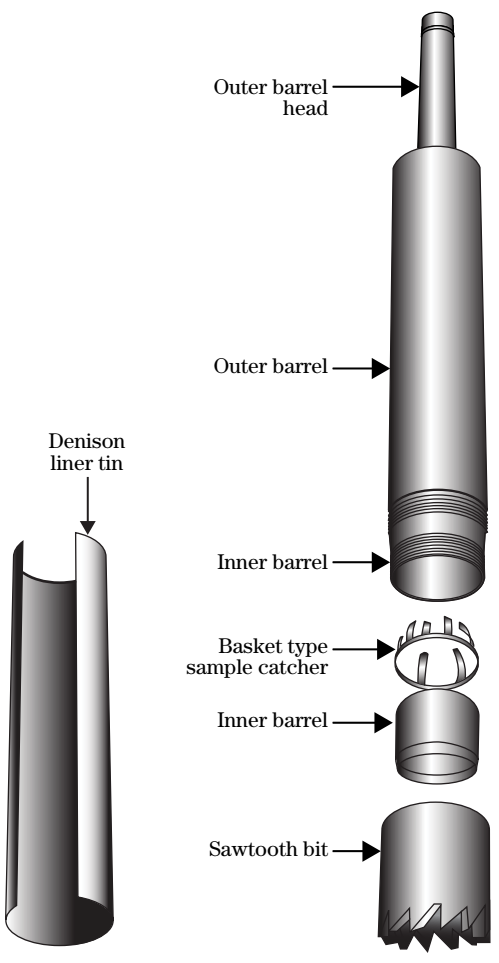

(6) Rock core barrel samplers

Rock core barrel samplers are of two types: single tube and double tube. The single tube is designed primarily for boring in sound rock or for taking large cores in all types of rock. Double-tube rock core barrels are particularly useful for drilling small holes in sound rock, for drilling fissured rock, and for drilling soft rock where the core needs to be protected from the erosive action of drilling water.

Figure 5–6 Swivel-type, double-tube rock core barrels

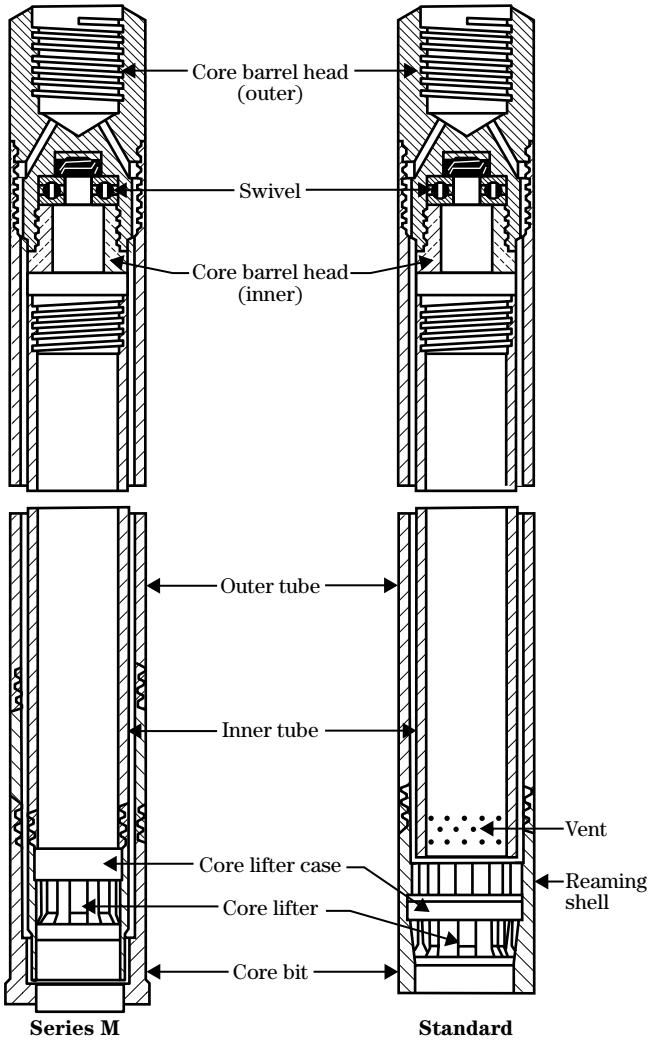

(c) Rock-sampling tools

The fluid passes between the inner and outer barrels eliminating its erosive action. There are two types of double-tube core barrels: rigid and swivel. In the rigid type, the inner tube and outer tube rotate together, while in the swivel-type double-tube core barrel, the inner tube does not rotate. The double-tube rock barrel (fig. 5–6) differs from the soil-coring barrel in that it does not have a removable liner to hold the sample, and in the relationship of the cutting shoe to the inner shoe.

The cutting shoe trims the core at slightly less than that of the inner barrel and the sample is retained in the inner barrel by means of a core catcher. The rock core barrel obtains a sample of rock in the shape of a cylindrical core. The circular bit cuts the core and the barrel slides down over it. Diamond bits and reaming shells are shown in figure 5–7. A ball-check valve relieves water pressure and a core catcher assists in retaining the core in the barrel.

Figure 5–7 Diamond bits and reaming shells

(1) Air percussion

Air percussion drilling is used most frequently in the mineral and water exploration industries. It is often used in conjunction with auger boring. The drill uses a down-the-hole or piston-driven hammer to drive a heavy drill bit into the rock. The cuttings or chips are blown up the outside of the rods and are collected and examined or logged at surface. The cuttings provide only low quality samples. Air or a combination of air and foam lift the cuttings. If water is found in the hole, the borehole may become clogged. Air percussion drilling can be used to advance 4- to 14-inch boreholes in bedrock and can be used in water wells, geothermal wells, production wells, and environmental monitoring wells. This method of drilling is useful for identifying voids or weathered zones in competent rock.

(2) Wireline samplers

Wireline core barrel systems were developed to reduce the amount of time required to recover conventional core barrels from deeper holes. Wireline core barrels are double-tube type barrels with an inner tube that is held in place with a latch during coring. Figure 5–8 shows a cross section of a wireline sampler. When the run is completed, an overshot is lowered down the bore of the drill rods with a small cable (wireline) and hooks onto the spear of the inner tube head. Tension on the head releases the latch and frees the inner tube, which is then raised to the surface through the drill rods.

After removal of the core, the inner tube is lowered back into the outer tube, and coring is ready to start again. The drill string remains in the hole unless the core bit needs to be replaced due to wear.

Modern coring equipment and practice generally uses long-stroke automatic drills and conventional double-tube core systems to depths of 200 to 300 feet. At shallower depths, the automatic feeding of rods and connection make-up, combined with faster coring with conventional core barrels, are faster than wireline systems. Coring speed is inversely proportional to the "kerf," the width of the cut. Thinner kerfs are associated with faster drilling, and thicker kerfs slow the drilling process. Conventional core barrels cut a thinner kerf and core faster than wireline barrels. Below 200 to 300 feet, wireline systems generally become more efficient.

Single tube core barrels are almost never used in modern coring practice.

Figure 5–8 Diagram of wireline core barrel sampler

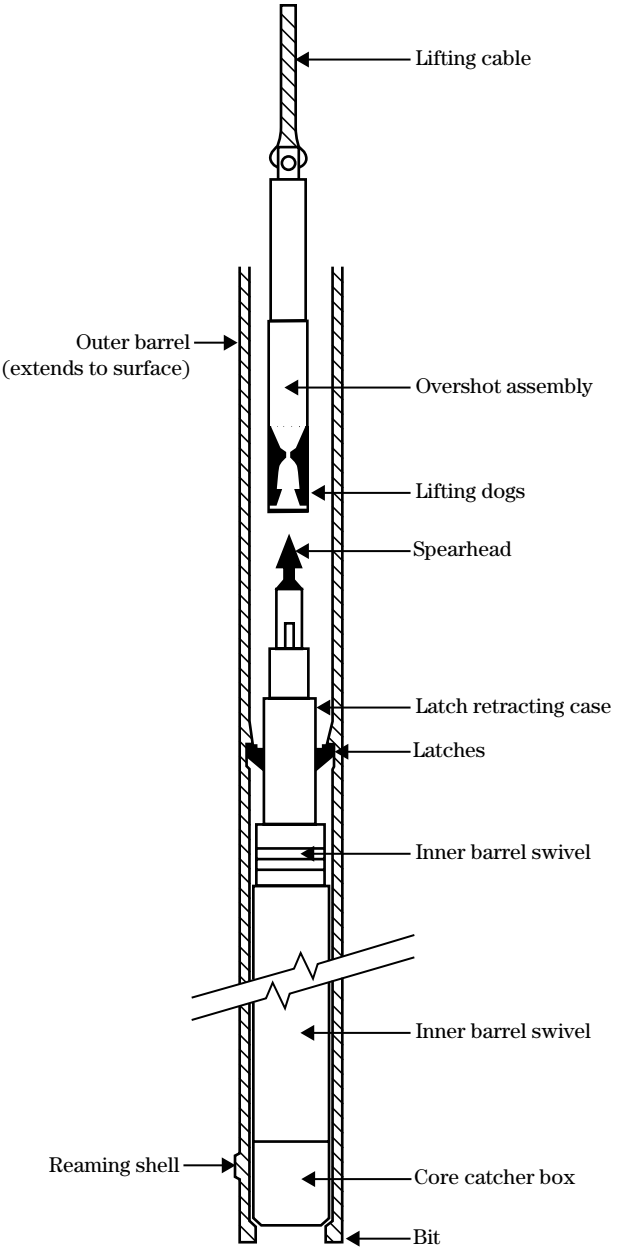

631.0504 Samples

Samples are obtained for correlations, future reference, and soil mechanics testing to determine the physical properties of materials and how they behave under specific conditions. The results provide a basis for predicting the behavior of the materials during construction and operation of a structure to provide a safe, economical, and practical structure. To serve the intended purpose adequately, samples must be representative of the horizon sampled. They must be of suitable size and character so that the necessary tests can be performed. The kind of samples to be taken at a particular site depends on the nature of the materials, testing procedures planned, and on the size and purpose of the structure. The number of samples needed depends on the variability of the materials and the information required to adequately model and analyze the site.

(a) Soil sample size requirements for soil mechanics laboratory testing

For more detailed information about collecting, logging, tagging, storing, transporting, and handling soil samples, refer to appropriate ASTM standards. Also refer to NEM531 for specific policies on shipping or transporting soil materials (APHIS requirements).

Table 5–5 lists the major laboratory tests that could be performed on four sample sizes and provides a general description of the information provided by the test results.

Table 5–6 indicates minimum sample sizes required based on gradation. Soils that contain gravel or larger sized particles or unweathered bedrock require larger quantities of samples for determining gradation and for other test requirements.

(b) Sample documentation

Take detailed field notes for each undisturbed sample. They should include the following items as appropriate:

- hole number and location
- complete log of hole above and below samples
- method of drilling and size of hole
- type and size of test pit
- casing (type and size) or drilling mud mixture used
- groundwater elevation and date and time measured
- length of drive and length of sample recovered, or percent recovery
- size of sample (diameter)
- elevations or depths between which sample was taken
- method of cleaning hole before sampling
- other items, such as difficulties in obtaining sample

With a permanent marking device, label the sample container. Record the following information on the label:

- watershed, site number, and location
- date
- hole number and sample number
- elevations or depths between which sample was taken
- top clearly identified
- name of person who took the sample

The placement of an aluminum tag with pertinent information in the storage container helps the laboratory when exterior labels are lost or damaged.

(c) Determining sampling needs

The geologist and engineer must determine what materials should be sampled and what tests are needed. The character of the material and the tests to be performed govern the size and kind of sample required. The selection of equipment and the method of obtaining samples are controlled by site conditions, character of the material, depth of sampling, and the size and

Table 5–5 Sample size for soil test requirements [1/]

Sample size	Comments	Tests available	Information from testing
Extra Small "XS"	Typically when sample sizes are limited by investigation; i.e., SPT, poor recovery, stratification in undisturbed samples, etc.	Hydrometer analysis and sand sieve	Gradations of fine particles and sands
		Water content	Natural water content
		Soluble salt	Percent soluble salts by weight
		Crumb and double hydrometer	Determine whether soils are dispersive
		Possibly a 1-point Atterberg or determination of nonplastic	Estimated plasticity
Small "S"	Typically bagged disturbed samples or relatively homogeneous, undisturbed Shelby tube samples	Tests listed for "XS" samples plus the following:	
		Sieve analysis for gravel and sand	Gradations of sands and gravels to complement fine gradation determined from hydrometer analysis
		Atterberg limits [1/]	Plasticity (LL, PL, PI)
		Pinhole test if needed	Clarification of crumb and double hydrometer dispersion test results
		Chemical test if requested (this test conducted by NSSL in Lincoln, NE)	More specific determination of dispersion
		Specific gravity (Gs)	Specific gravity of fine particles
		Consolidation (undisturbed)	Settlement characteristics and qualitative strength information
		Dry unit weight (undisturbed)	In situ density and water content
		Unconfined compression test (for cohesive undisturbed samples)	Saturated undrained cohesive strength representing short-term strength
		Triaxial shear (undisturbed—possible when adequate quantity of similar materials captured in one or more samples from the same stratum and three specimens of representative material can be carved)	Consolidated undrained strength with pore pressures measured providing both effective and total strength parameters and or unconsolidated undrained strength
		Flexible wall permeability (undisturbed)	In situ permeability rate and/or seepage rate and dry unit weight
Large "L"	Typically not feasible from undisturbed Shelby samples due to limited volume in the tube.	Tests listed for "XS" and "S" samples plus the following:	
		Standard or modified proctor density test (compaction)	Moisture/density relationships of soils to be used as earthfill or for which other complex tests require density information
		Remolded shear tests	Strength parameters for unconsolidated undrained strength of compacted fill
		Remolded flexible wall permeability tests	Permeability rate associated with a soil under specified conditions such as density and the addition of additives and/or unit seepage of that soil under a given hydraulic gradient
		Determination of additive rates for special applications [2/]	Permeability rate associated with soils treated with additives Necessary rate of additive to treat dispersive clays Necessary rate of additive to reduce plasticity and raise pH in highly plastic fill materials
		Bulk specific gravity (Gm)	Specific gravity and percent absorption of rock/gravel fraction of the sample

Table 5–5 Sample size for soil test requirements [1/]—continued

Sample size	Comments	Tests available	Information from testing
Extra large "XL"	Tests described in "XS," "S," and "L" samples plus special filter-design tests, large diameter shear tests, soil-cement tests, breakdown on degradable rocks, and riprap durability tests Call the soil mechanics lab to discuss these or other special testing requests prior to collecting or sending samples		

1/ The size of the sample to be sent to the laboratory varies with the maximum size of the material sampled. Most laboratory tests are performed on materials passing a No. 4 sieve. Larger samples are, therefore, needed of materials that contain significant amounts of larger particles. The minimum sizes of field samples for various gradations of materials are shown in table 5–6.

2/ If fly ash or other nontraditional chemical treatments are desired, samples of these chemicals from the expected source must also be submitted with the soils samples. Approximately 5 pounds of these chemicals are needed.

Table 5–6 Minimum field-sample size for various gradations of material [1/]

Sample size group by gradation of material	Maximum particle size (in)	Minimum field sample size (lb)
Gradation No. 1 **Natural materials ≥ 90% passing the No. 4 sieve:**		
"XS" sample	≤3/4	2 (all SPT whatever size)
"S" sample	3	10
"L" sample	3	50
"XL" sample	3	100
Gradation No. 2 **Natural materials = 50 to 89% passing the No. 4 sieve:**		
"XS" sample	3	20
"S" sample	3	75
"L" sample	3	150
"XL" sample	6	200
Gradation No. 3 **Natural materials < 50% passing the No. 4 sieve:**		
"XS" sample	3	40
"S" sample	3	100
"L" sample	3	200
"XL" sample	6	250

1/ Note that the maximum particle size to be included in field samples varies. Estimate the percentage of oversize materials excluded from the field samples and record it along with descriptions of the samples on the Log of Test Holes (Form SCS–533 or equivalent) and on the Soil Sample List (Form SCS–534 or equivalent). It is not necessary to screen samples to determine the exact amounts of the various particle sizes. Visual estimates of the particle sizes and the quantities involved are adequate.

kind of samples needed. The kinds of samples to be taken for different locations and tests are explained.

(1) Foundation

Take undisturbed samples of questionable materials at the intersection of the centerline of the dam with the centerline of the principal spillway. Take undisturbed samples at other points along the centerline of the dam if materials of questionable bearing strength, compressibility, or permeability are encountered that cannot be correlated with strata at the intersection of the centerlines of the dam and principal spillway.

Take 25-pound disturbed samples from each distinct horizon in a proposed cutoff-trench area for compaction analysis if the material that might be excavated is suitable for use in the embankment. Take 4-pound disturbed samples of all other soil horizons and of the same horizons from different holes if they are needed to verify correlation.

Take cores of compaction-type shales for slaking (wetting-drying) and freezing-thawing tests. Foundations of these materials may require special treatment, such as spraying with asphalt or immediate backfilling of the cutoff trench on exposure. Rebound following unloading may also be a problem in some types of shale. The geologist and engineer should jointly decide what laboratory tests are needed for soil and rock.

(2) Spillway

In addition to samples from intersection of centerlines of the dam and spillway, take additional undisturbed samples beneath the centerline of the proposed principal spillway.

If rock is to be excavated, take undisturbed cores of rock materials. To protect them from weathering, samples of some rock cores must be dipped in paraffin and stored indoors.

(3) Auxiliary spillway

Take large disturbed samples of any material proposed for use in the embankment. If rock is to be excavated, take cores of the rock material. Although soft shales may be classified as common excavation, it is desirable to obtain cores for later inspection by prospective contractors. If there is any question about suitability of the rock materials for use in the dam, send cores or samples to the laboratory for freezing-thawing, wetting-drying, rattler, and other tests that will help to determine their physical characteristics.

(4) Borrow areas

Take large disturbed samples of each kind of unconsolidated material that can be worked as a separate zone or horizon. For classification, include small materials that are of such limited extent or so distributed that they cannot be worked separately or placed selectively in the fill. Although these less abundant materials generally are mixed with adjoining materials during borrowing operations, their inclusion in samples from the more abundant materials or more extensive borrow zones may result in erroneous evaluation. Laboratory tests of the index properties of these less abundant materials results in better evaluation of the effect and use of various mixtures.

Materials with the same USCS classification and from the same horizon and zone can be composited by taking approximately equal amounts of material from each hole that is to be included in the composite. Like materials should not be composited, however, from significantly different topographic elevations or from different stratigraphic elevations.

Do not take composite samples in areas where high salt content, montmorillonitic clay, or dispersion are suspected. In these areas, collect small individual samples from each hole. Samples with like characteristics are composited in the laboratory or testing section after the index properties have been evaluated. The geologist and engineer should furnish guidance on laboratory compositing, based on field distribution of materials.

On the soil sample list, NRCS–534, show from what holes and at what depth in the hole a composite sample was taken. Give estimates of the quantity of borrow material represented by the sample on Form SCS–35, its equivalent, or in the geologic report.

It is not necessary to sample surface soil that is to be stripped from the stockpile and later to be placed on the completed embankment. Since this surface soil is not to be compacted to a required density, compaction tests are not needed.

If borrow material will remain wet during construction, retain several samples in sealed jars or plastic

bags. These samples are needed to determine the field moisture content.

In borrow areas where the water table is permanently high, the collection of borrow samples below the water table serves no useful purpose, unless the area is to be drained.

In the geologic report and on form SCS–356, specify what tests other than compaction are needed. Show the location of all samples on the plan and the cross sections of the borrow area on the geologic investigation sheets.

(5) Reservoir basins
Take large disturbed samples that are representative of the bottoms and sides of farm ponds and storage reservoirs for sites where moderate seepage or leakage is suspected. If local materials are to be used for blanketing or sealing, obtain 25–pound samples of each kind. To determine permeability of reservoirs or pond basins, collect samples from the surface 12 inches of the present or proposed bottom and sides. Where borrow is to be removed from the pond area, take samples from below the proposed borrow depth for permeability tests.

(6) Relief well and foundation drain locations
If permeable strata may require drainage, take undisturbed samples, if possible, for permeability determinations. If the geologist and engineer conclude that relief wells or foundation drains are needed, the aquifer must be delineated and representative samples taken. Take undisturbed samples of all strata from the surface to 2 feet below the bottom of the permeable stratum.

It is impossible to obtain an undisturbed sample of some kinds of permeable material. It may, therefore, be necessary to determine the permeability or transmissibility (permeability times thickness) of an aquifer or aquifers in the field by field permeability tests. If field permeability tests are made, take representative samples for use in the design of the well and filter.

Where corrosion or incrustation of the relief-well screen is a problem, take a sample (1 qt) of the groundwater and send it to the laboratory to test for alkalinity, chlorides, iron, total hardness, and pH value.

If investigations of the centerline of the dam indicate that foundation drains may be needed, take 4-pound disturbed samples for mechanical analysis of each horizon in which a drain may be placed. These samples usually are of permeable material, but where it is necessary to pass the drain through impermeable horizons, collect samples of this material as well.

(7) Stream channel and other areas
If gravels and sands from channels or other nearby areas seem to be suitable for drains or filters, take samples for mechanical analysis.

(8) Soil stabilization
Any samples needed for soil-stabilization measures should be representative of the area where the measures are to be installed. The number of samples to be taken depends on the areal extent of the treatment and on the kinds of materials. Tests for soil cement or other chemical soil-stabilization measures require very large (75-lb) samples.

(d) Undisturbed samples

Undisturbed samples are taken so that the structure and moisture content of the original material are preserved to the maximum extent possible. Undisturbed samples are used to determine shear strength, consolidation, and permeability.

Rock cores are used to determine strength, permeability, and weathering characteristics. Undisturbed samples are generally collected from foundation materials beneath embankments and appurtenant concrete structures when information on natural strength, consolidation, or permeability is needed. The important considerations for undisturbed samples are that they be representative and that any disturbance of structure and moisture conditions of the sample be reduced to an absolute minimum. This requires close attention to sampling procedures, tools, packaging methods, and transportation.

Undisturbed samples from a depth of more than 15 feet usually must be obtained with drilling equipment. In the absence of drilling equipment, their collection involves the excavation of test pits from which cubes or cylinders of soil can be taken. Cubes, cylinders, or clods of soil can also be cut from the sides of open pits and cut banks, both natural and artificial.

Preparation and shipment of undisturbed soil samples

Undisturbed soil samples collected during the preliminary or detailed site investigation represent a significant investment in time and funds. Therefore, preparation and shipment of these samples to the testing facility merit special attention. Refer to NEM531 for APHIS requirements and restrictions on shipping or transporting soils samples.

All possible precautionary and preventative measures must be used to minimize the detrimental effects of disturbance due to shock, drying, and freezing during collection, preparation, and shipment. Relatively firm, cohesive, nonsensitive materials require a minimum of extra care in preparation and shipment. They should be packed and marked to ensure shipment in the upright position to prevent damage or loss of individual tubes, and to prevent freezing.

Saturated, dilatant soils, or sensitive materials (ML, SM, CL–ML, some CL) require special attention to keep sample disturbance to a minimum. These samples must be kept in a vertical orientation and protected from shock at all times. If drainage is necessary to firm up the sample slightly, a perforated expanding packer should be inserted in the bottom of the tube prior to disconnecting it from the drill stem. The sample should then be carried to a suitable drainage rack. When visual examination indicates that an adequate degree of drainage has been achieved, both ends should be sealed with nonperforated expanding packers. At this time, the tubes should be packed on site, prior to any vehicular transportation. Some fragile or brittle materials are susceptible to fracturing or cracking within the tubes if they are bumped or jarred, and they also require special handling. Various types of protective containers have been constructed and used to ship core samples to testing facilities.

Containers should incorporate the following features:

- Sample tubes are maintained in a vertical position from packing onsite to unpacking at the testing facility.
- For sensitive soils, design features and packing materials will cushion or isolate the tubes from the adverse effects of jarring or shocks while in transit.
- Internal packing and external marking should be provided to protect against freezing.

Examples of shipping containers that have been used successfully are shown in figure 5–9.

(e) Disturbed samples

Disturbed samples must be representative of the stratum, material, or area being sampled. They are used to make qualitative estimates of probable behavior of materials. This kind of sample is the easiest to obtain and is important for the classification of materials and for many soil mechanics analyses. But if quantitative information on in-place strength, consolidation, or permeability is needed, disturbed samples are of little value. The important consideration for disturbed samples is that they be representative of stratum from which they are taken.

(1) Methods of obtaining

Representative disturbed samples are obtained by hand excavation or, at a greater depth, by bucket-type augers or drive samplers. Be careful not to contaminate the sample with materials from other strata. Continuous-flight augers and wash borings are unsatisfactory. Take proportionate volumes of all material between the selected elevations in the sample hole. If the sample is too large, it can be reduced by quartering after it is thoroughly mixed.

(2) Sample containers

Place disturbed samples in heavy canvas bags.

Table 5–7 relates the size of sample bags to capacity. If it is necessary to retain the field moisture content for laboratory determination, such as in borrow material that is wet and is expected to remain wet, use polyethylene plastic liners inside the canvas sample bags.

(3) Labeling, numbering, and shipping

Tag bag samples of disturbed material with cloth (linen) shipping tags that show the following information:

- location of project (State and town or community)
- site or project name and number
- classification of project (CO–1, etc.)

- where sample was taken (centerline station, borrow grid, etc.)
- test hole number
- field number assigned to sample
- depth of sample
- date and name of collector

Number composite samples and show this number on the tag. Record the numbers of the individual holes from which the composite was taken and the field numbers of the samples on form SCS–534. Since tags are often pulled off in transit, place a duplicate tag inside the bag. To expedite the sorting, numbering, and handling of samples in the laboratory, the field number of a sample should start with the test-hole number followed by a decimal that indicates the number of the

Figure 5–9 Shipping containers for undisturbed samples

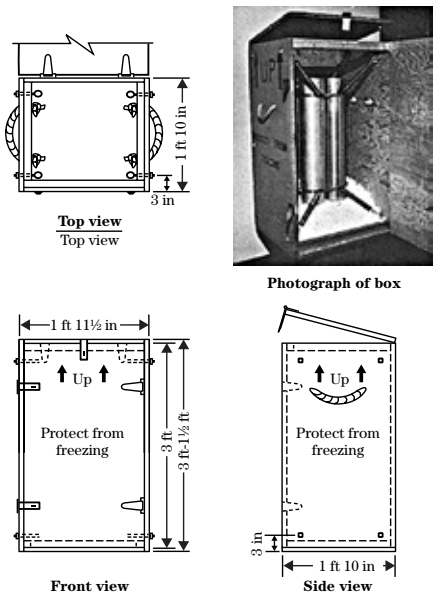

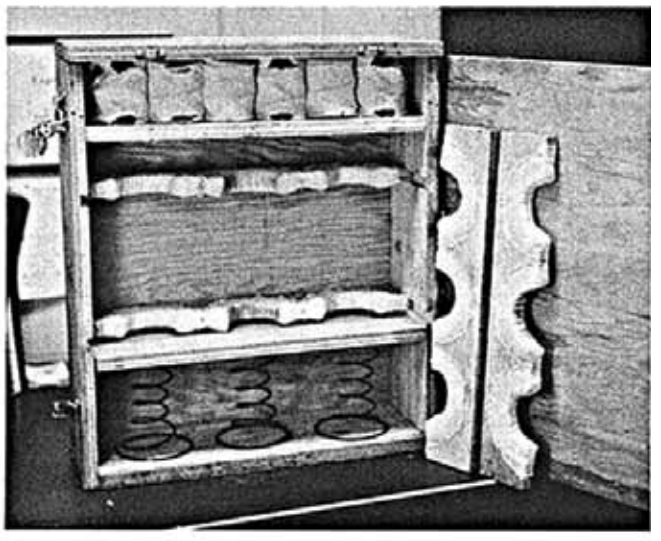

Photo shows spring supported, floating base for sample tubes; floating top plate with foam rubber packing; shaped, rubber padded lateral supports.

Sample tube supported vertically by spring action and laterally by shaped, rubber-padded inserts.

Figure 5–9 Shipping containers for undisturbed samples—continued

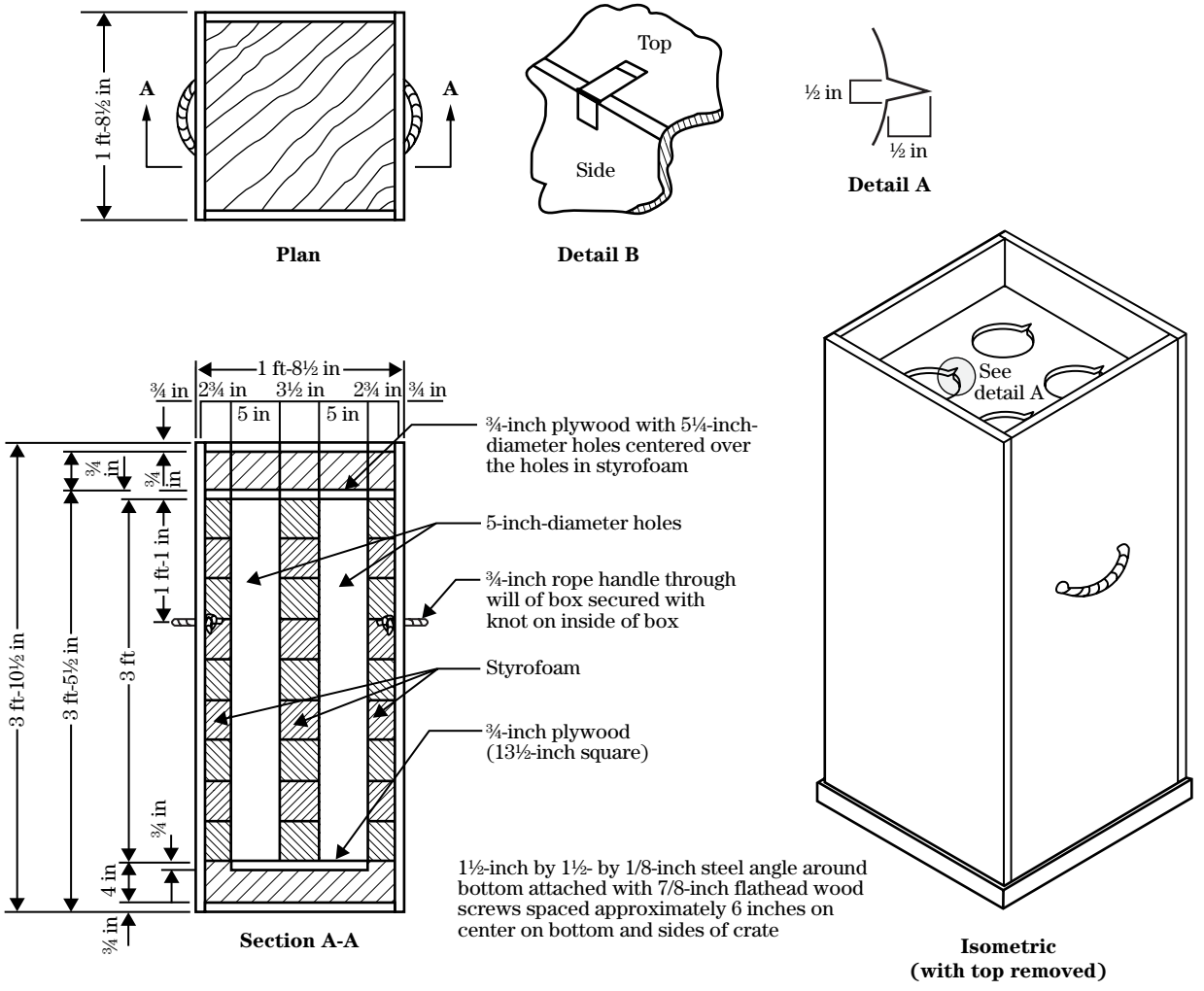

sample from that hole. Examples are sample numbers 1.1, 1.2, 1.3, which are three samples from test hole number 1 (in the centerline of the dam), and sample numbers 101.1 and 101.2, which are two samples from hole number 101 (borrow area). Under separate cover, send the standard forms containing the descriptions of the samples and logs of the test holes to the laboratory, along with copies of plans and profiles at the same time the samples are shipped.

Send a copy of the geologic report to the laboratory as soon as possible. A summary of the material to be sent to the laboratory follows:

- Form SCS–533, Log of Test Holes.
- Form SCS–534, Soil Sample List—Soil and Foundation Investigations. On this list show the individual holes, or the samples, included in composited samples if such mixtures are prepared in the field. Record the method of transportation and information concerning Government bills of lading. List the samples on Form SCS–534 in this order: foundation area, principal spillway, drainage and relief wells, channel, auxiliary spillway, and borrow area.
- Forms SCS–35A, 35B, and 35C (or their equivalents), Plan for Investigations.
- Copy of geologic report, including the supplement on interpretations and conclusions.

At the time the samples are sent to the laboratory, send copies of the various forms, logs, and the geologic report, including the supplement, to the State office. This information is needed to prepare Form SCS–356, Request for Soil Laboratory Test.

Table 5–7 Capacity of various sample bags

Sample-bag size (in)	Plastic liner		Capacity (lb)
	Thickness (in)	Size (in)	
9 by 15	0.0015	5 by 3½ by 14	10
16 by 24	0.0020	10 by 4 by 24	50
16 by 32	0.0020	10 by 8 by 30	75

(4) Packaging

Samples collected in a double-tube core barrel are encased in metal liners when they are removed from the sampler. Plug both ends of these containers with expanding packers or caps made of wood or metal. If nails are used to fasten the plugs, be careful not to disturb the sample while nailing.

Expanding packers (fig. 5–10) are preferred for sealing the ends of thin-wall tubes, but metal caps, tape, and wax can also be used. Be careful that there is no air space between the sample and the seal. Place labels and all identification on the tube or the liner, not on the ends.

If they are tightly confined, samples collected by hand excavation can be placed in tin cans, Denison tins, or similar containers.

Seal all undisturbed samples thoroughly with a high-melting-point wax. Beeswax or a mixture of beeswax and paraffin is recommended. The wax seal should fill all spaces between the sample and the container, and cover both ends of the sample. Pack all undisturbed samples in excelsior, sawdust, or other shock-absorbent material and crate them. Two or more samples can be boxed together for shipment, but they should not touch each other.

Figure 5–10 Expanding packer for sample tube

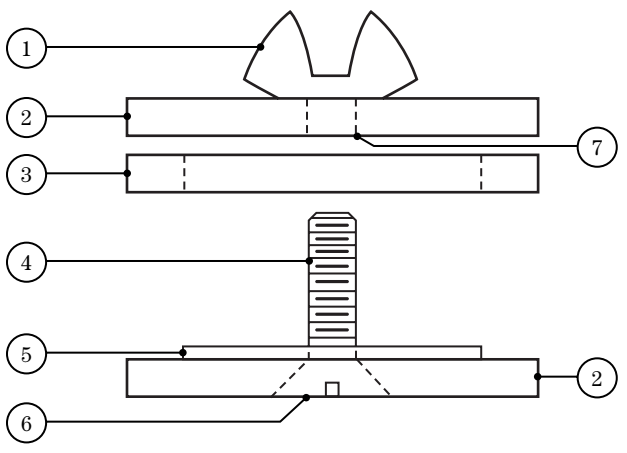

1. Brass wingnut
2. Alluminum bar stock
3. Gum rubber gasket
4. Flathead brass machine screw
5. Washer
6. Head sealed with waterproof cement
7. Drill

Label the containers with precautionary information such as “Handle with Care,” “This Side Up,” “Do Not Drop,” and “Protect from Freezing.”

(f) Disposition of rock cores

Store samples of easily weathered rock cores, such as shale, indoors. If they are left outdoors and allowed to weather, they may give prospective contractors an erroneous impression of their original hardness.

Handle rock cores carefully and store them in boxes of dressed lumber or other suitable materials. The core boxes should be about 4 feet long, with no more than four cores stored in each box. The cores should be separated by longitudinal partitions. Use separation blocks wherever a core is lost. Embossed metal tape or other acceptable materials can be securely fastened in the box to indicate by elevation the beginning and end of each reach of core in proper sequence as taken from boring.

Place cores first in the top compartment next to the hinged cover and proceed toward the front of the box in the order the cores were taken from the drill hole, filling each compartment from left to right in turn (as one reads a book). Note the elevations on separation blocks for those sections in which a core could not be obtained. Photograph the cores after they are boxed. On the inside of the cover stencil the box number, project name, site number, and hole number. Stencil the same information on the outside of both ends of the box.

Photographic documentation of rock core samples

Photographic documentation of core samples is a vital part of the investigation reporting process and should be accomplished in a precise and systematic fashion. As a matter of practice, core samples are periodically disposed of, at which time the photographs become the primary visual record of subsurface rock conditions. High resolution digital images are preferred, although color prints are also acceptable. The advantages of core photography include:

- provides a permanent visual record of the rock condition, including in situ color weathering condition and void filling
- provides a graphic record of structural features exposed in the rock core, from which angular and spatial relationships can be measured
- provides convenient graphic illustration for geologic reports and presentations during design, construction, and operation
- may be enlarged to provide examination of mineral and microstructure characteristics in place of actual core samples. These enlargements can also be cut and pasted on the master drill logs.

To be effective, the photographic documentation must be accomplished in accordance with the following minimum standards:

- Core boxes should be photographed under natural light conditions and oriented so that shadows are eliminated.
- The axis of the camera lens should be perpendicular to the core box floor to minimize distortion of core and linear features. See figures 5–11 and 5–12.
- A measuring scale should be affixed to the edge of each core box as a size reference.
- A color proof strip (multicolor chart obtainable from photo shops) should be included in the documentation to ensure true color reproduction.
- Index information should include:
  - Reference data such as project name, hole and box number, date, core internal, and hole location. These data would usually be printed on the box lid and end. An example is provided in figures 5–13 and 5–14.
  - Identification and scaling data such as project name, hole number, box number, core run depth, reference scale in inches and tenths, hole completion date, and color index strip. These data are provided in or along the edge of the core box and is included within the photograph as shown in figure 5–15. The lettering on the core box should not be less than one inch in height.

Stereoscopic pairs of photos can, at times, be useful to study cores. These can be taken in the following manner:

- Take one photo of the cores in a dry condition.
- Wet the cores (a 3- to 4-inch paint brush can be used to put water on the cores).
- Move about 0.5 feet to the left or right from where the original photo was taken, then focus the camera on the same spot as the first photo and take a second photo.

Core sample photography is a necessary element of the geologic documentation. To be useful and effective, the procedure must be completed with proper equipment and with attention to detail and accuracy. Distorted images, poor focusing, and lack of core run depths or scale are not acceptable technical documentation. Good images can save considerable time and money throughout the design, construction, and operational phases of the engineered structure.

Core boxes with the headings and blank lines can be included as part of the drilling investigation contract or the information can be printed inside the box lid during the investigation as shown in figure 5–13.

A diagram of a core box end is shown in figure 5–14.

Figure 5–11 Setting up rock core boxes for photographing

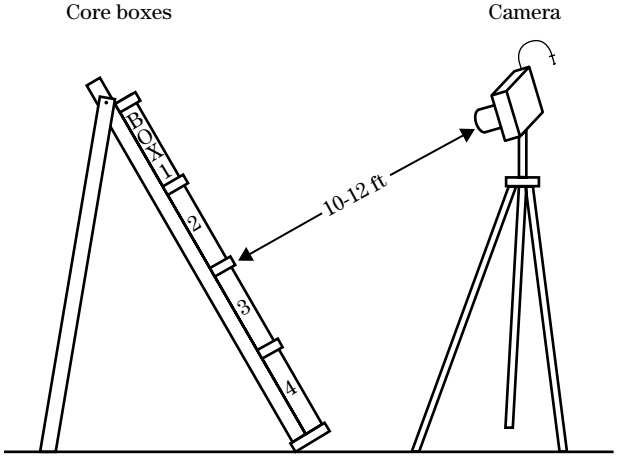

Figure 5–12 Portable core box rack

Figure 5–13 Rock core sampling information on inside lid of core box

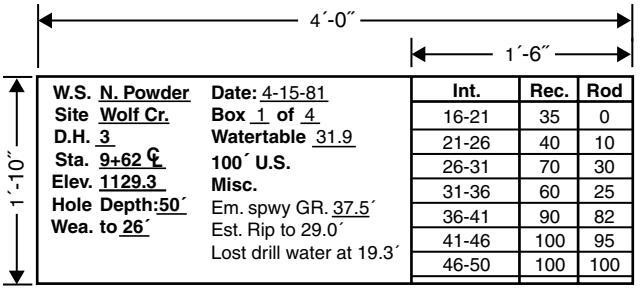

Figure 5–14 Sample data inscription on core box end

North Powder Watershed
Wolf Creek Dam DH-3
Box 1 of 4 Depth 10 – 35 ft.

Figure 5–15 Sample photograph of core box

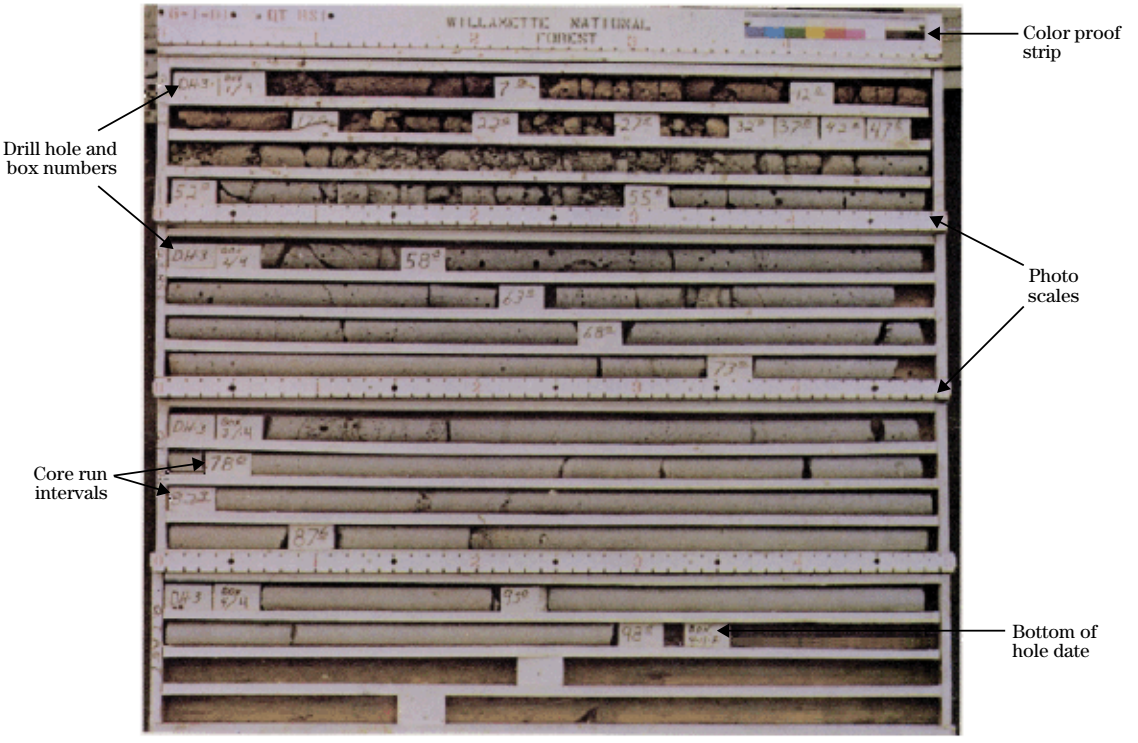

631.0505 Testing earth materials

(a) Test holes

Test holes are drilled to obtain representative disturbed and undisturbed samples to:

- advance and clean holes to specific horizons for logging, sampling, and conducting tests
- advance holes to bedrock to delineate rock surface
- install piezometers and relief wells

Disturbed samples are commonly obtained through the Standard Penetration Test, using a split-spoon sampler. Undisturbed samples are obtained by pushing or coring a tube into in situ soil materials. The most common undisturbed sampling method is the hydraulic pushing of a Shelby tube, which is referred to as a "push-tube sample."

Test holes may be augered by hand, or through powered drill rigs that are mounted on trucks mounted rig, all-terrain rig, all-terrain vehicles, tracks, or on a barge. Selection of drilling methods depends on:

- access (terrain roughness, space and height limitations) and noise ordinance
- types of tests or samples needed for the investigation and design needs
- disposal of drilling fluids and cuttings (contaminated cuttings and groundwater may have to be handled as hazardous waste), lithology (soil type such as sand, clay, and boulders), rock type, and aquifer characteristics (depth to water)

(1) Hand-auger borings

Hand augers are useful for advancing holes to shallow depths, but normally limited to less than 20 feet. A bucket-type hand auger provides samples useful for logging and interpretation. Motorized hand augers (post-hole augers) are available but are also depth-limited.

(2) Power-auger boring

Truck or trailer-mounted power augers are used for dry boring in unconsolidated materials. They range in size from Giddings rigs, which turn small diameter, solid stem flight augers to large rigs capable of turning 12-inch inside diameter, hollow stem augers. Test holes are advanced by rotating a cutting bit into the materials. A wide variety of materials may be bored with power augers. They are not suitable for use in materials containing cobbles or gravel, hard cemented soils, or saturated cohesionless soils. Unstable materials require casing, particularly below the water table.

Two different techniques of power-auger boring may be use to sample earth materials:

- Screw the auger into the soil like a corkscrew, without mixing. The auger is then pulled from the hole and the materials sampled and logged off the flights of the auger.
- Screw the auger into the soil like a corkscrew and then spin until the material at the leading edge of the auger is brought to the surface. This is done when the power auger lacks the power to pull the auger from the soil after it is screwed in. The soil materials are logged and sampled as they are transported to the surface. Mixing of the materials is a problem, but with experience, good samples and interpretative information can be obtained.

(3) Wash borings

A wash boring is a means of rapidly advancing a hole by a striking or rotating, cutting, or chopping tool and by jetting with water, which is pumped through the hollow drill rod and bit. This method usually requires the use of casing. Cuttings are removed from the hole by the water circulating upward between the drill rod and casing. The cutting tool is alternately raised and dropped by the tightening and slackening of a line wrapped around a cathead. A tiller attached to the drill rod permits the rod and cutting tool to be rotated. The material brought to the surface in the circulating water is nonrepresentative of materials in place. Consequently, positive identification of particular strata is not possible when holes are advanced by the wash-boring method.

(4) Continuous drive sampling

This method consists of forcing a tube into soil materials and withdrawing material retained inside the tube. Tubes are driven by use of a drive hammer or pushed using a jack or hydraulic cylinders against the weight of the rig. Continuous drive test holes can be made in clays, silts, and relatively stable materials free from gravel, cobbles, and boulders. The sampler, when withdrawn, acts as a piston in the hole, causing more excessive caving than other methods of boring.

Although highly recommended for logging purposes, continuous drive sampling represents a slow method of advancing holes if logging is not the primary purpose of the boring. Even minor changes in soil materials are visible when the sample is extruded from the tube. However, when used for logging purposes, the hole should be advanced by other means, such as with hollow-stem augers and tubes that will fit through the inner diameter of the hollow stem augers to provide wall clearance. Continuous drive sampling is generally impractical for advancing holes with diameters larger than 3 inches.

(5) Rotary drilling

Types of rotary drilling include:

- direct rotary drilling
- reverse circulation rotary drilling
- dual-wall reverse circulation drilling
- core drilling

A rotary drill advances a test hole by rapid mechanical rotation of the drilling bit (e.g., blade, tricone, and coring bits), which is made of carbide, tungsten, case-hardened steel, and diamonds. The bit cuts, chips, and grinds the material at the bottom of the hole into small particles. The cuttings are normally removed by pumping water or drilling fluid from a sump down through the drill rods and bit and up through the annular spacing into a settling pit and back to the sump. Compressed air is also available on many rigs as an alternative to remove the cuttings from the hole. Air rotary drilling is essential for drilling in karst areas where circulation loss is expected.

Rotary-drilling methods can advance test holes in a wide variety of materials, including hard rock. Rotary drilling may be the only practical method of advancing holes and obtaining undisturbed core samples from certain types of soil and rock materials. For a description of rock drilling see NEH631.0503(c) Rock-sampling tools.

(6) ODEX casing advancement system

Overburden drilling eccentric casing system (ODEX) equipment is relatively new to the drilling industry. The system employs a pilot bit and an eccentric, under-reaming bit that swings out due the rotation of the drill stem. It also requires the use of a down-the-hole hammer and a specialized drive shoe. The under-reamed hole is slightly larger than the diameter of the casing, so as the bit advances the casing follows directly behind, and there is never an open hole. Casing walls can be thinner as they do not have to withstand percussive action. The system has been used to reliably drill holes more than 300 feet deep.

Large voids, loosely consolidated sediments, and severely fractured rock can lead to circulation loss and hole cave-ins using conventional drilling methods. ODEX systems can be used in more difficult geologic conditions such as glacial till; volcanic flows with hard flow material interlayered with gravels and flow breccia; and near-source colluvium and high-energy fluvial environments where cobbles and boulders are present within a loose matrix.

ODEX can be used with any pneumatic or hydraulic top hammer that has independent, reversible rotation, with sufficient torque to match the hole diameter and depth requirements. When drilling through overburden to bedrock, drilling is stopped briefly when the casing enters the bedrock. Reverse rotation is applied, which causes the reamer to turn in, thus reducing the overall diameter of the drill bit assembly. The drill string can then be pulled up through the inside of the casing and drilling into the bedrock can then be continued with conventional drilling equipment.

The ODEX drilling sequence is shown in figure 5–16 and is describes as follows:

- When drilling starts, the ODEX reamer swings out and reams the pilot-hole wide enough for the casing tube to slide down behind the drill bit assembly.
- When the required depth is reached, rotation is reversed carefully, whereupon the reamer

swings in, allowing the drill bit assembly to be pulled up through the casing.

- Casing tubes that are to be left in the drill hole should be sealed at the bottom of the hole by means of cement grout or some other sealing agent.
- Drilling continues to the desired depth in the bedrock using a conventional drill string.

(7) Sonic (vibratory) drilling

Sonic drilling is also a relatively new technique for subsurface investigations. Sonic drills have penetration rates that can be three to five times faster than conventional drilling, and they do not require the use of drilling mud. The vibratory action of the sonic head produces much lower peak noise levels than top-hole hammers.

The sonic head, which is larger than a standard rotary head, rotates and oscillates simultaneously, causing the drill bit to vibrate up and down as it rotates. High-frequency resonant vibrations are transmitted from the head through the drill string to the end of the casing and then reflected back; causing the casing to stretch and thin, and to shorten and thicken 100 to 200 times per second. The operator controls the frequencies to match the characteristics of the geologic materials; frequencies range between 50 and 200 hertz (cycles per second).

Sonic drilling, as with the ODEX method, is useful in geologic conditions that are difficult for more conventional systems including fractured bedrock, high energy fluvial deposits, and glacial till. In unconsolidated materials, the intense vibratory action causes a thin layer of soil directly around the drill rods to fluidize. The fluidized soil zone extends a maximum of 5 millimeters around the rod, reducing the friction of the drill rods and allowing rapid penetration. Advancing the sampler in stiff, plastic clay soils can cause problems flushing the bit, and drilling through flowing sand can bind the bit. In rock, the bit pulverizes the material, creating dust and small rock particles and allows advancement of the bit.

The high-frequency oscillation of the driven rods ensures minimal disturbance of the in situ materials, providing high quality, continuous samples that are relatively undisturbed. They have been used to depths of greater than 700 feet (Water Well Journal, January 1998). The sample barrel is 10 feet long, and the core samples are frequently extruded into clear plastic sleeves so the materials can be logged. Split barrels, with and without liners, are used as well; the use of hydraulic extruders can minimize the disturbance. Figure 5–17 shows an extruded sample.

The U.S. Army Corps of Engineers has approved the sonic drilling method of advancing a hole through earthen embankments (Engineering Regulation 1110–1–180, 1 March 2006).

Figure 5–16 ODEX drilling sequence

Figure 5–17 Extruded sample obtained through sonic drilling. *Photo courtesy of Boartlongyear.com*

(b) Standard penetration test (SPT)

The SPT provides a measure of the resistance of soil to the penetration of the sampler. It also furnishes samples of the material penetrated for identification, classification, and other test purposes. This test is used to indicate relative in-place density of cohesionless and relative in-place consistency of cohesive foundation materials and for logging. Table 5–8 shows the relative density and consistency for various soils and blow counts. Refer to ASTM D1586, A Standard Test Method for Standard Penetration Test (SPT) and Split-Barrel Sampling of Soils.

The SPT is recommended for use in NRCS work. It is most applicable to fine-grained soils that are at or near saturation and to fairly clean, coarse-grained sands and gravels at variable moisture contents.

(1) Drilling equipment

Any equipment may be used that will provide a reasonably clean hole to ensure that the test is performed on undisturbed material and that will drive and reclaim the sampler in accordance with the procedure outlined below. Where necessary, casing or hollow stem auger will be used to prevent caving.

(2) Split-tube sampler

The split-tube sampler has an outside diameter of 2 inches and a hardened steel driving shoe at least 3 inches in length with an inside diameter at the cutting head of 1 3/8 inches. It is sharpened by tapering the last 3/4 inch to a cutting edge not greater than 1/16 inch thick. Dented, distorted, or broken shoes must not be used. A split spoon sampler is shown in figure 5–18.

A California-Modified style split-spoon sampler is used to collect wider diameter samples (for use with brass liners). The outside diameter is 2 ½ inches and also has a hardened steel driving shoe at least 3 inches in length, with the length of barrel 18 or 24 inches. A correction factor is applied to the blow counts to get N, the standard penetration resistance.

Table 5–8 Standard penetration resistance

Coarse-grained soils - - - (noncohesive) - - -		Fine-grained soils - - - - (cohesive) - - -	
Blows per foot	**Relative density**	**Blows per foot**	**Consistency**
< 4	Very loose	< 2	Very soft
4–10	Loose	2–4	Soft
10–30	Medium	4–8	Medium
30–50	Dense	8–15	Stiff
50	Very dense	15–30	Very stiff
		> 30	Hard

(8) Hammer

The drive hammer weighs 140 pounds and has a 30-inch stroke (free fall). Any type of hammer may be used as long as there is no interference with its free fall and its energy is not reduced by friction on the drill rod, guides, or other parts of the equipment. Most modern drill rigs have an automatic hammer that delivers the same energy mechanically. The advantages of the automatic hammer are increased safety and, by reducing the chance for human error, more consistent, repeatable results.

(9) Procedure for performing the SPT

Cleaning hole—Clean the hole to the sampling elevation by use of equipment that will not disturb the material to be sampled. Do not use bottom discharge fishtail bits, jetting through an open tube, or sand water bailers. Take samples at each change in stratum and at intervals not greater than 5 feet. Never drive casing (or hollow stem auger) below the depth to which the hole is to be cleaned out.

SPT procedure—Lower the split-tube sampler to the bottom of the cleaned hole. With the water level in the hole at the groundwater level or above, drive the sampler 6 inches with light blows so it will not be overdriven. This sets the sampler and prepares for the 1-foot SPT.

Drive the split--tube sampler 12 inches or to refusal by dropping the 140-pound hammer 30 inches sequentially, and record separately the number of blows required for each 6 inches of this 12-inch penetration test drive.

Penetration of less than 1 foot in 100 blows is generally considered refusal. The blow count is the total number of blows required to drive this 1-foot interval or, with refusal, the number of inches penetrated by 100 blows.

Remove the sampler from the hole, remove the drive shoe, and carefully split the sampler open. Identify and classify the material or materials, record the percent recovery, place typical sample or samples in jars (without jamming or compressing), seal jars, and label. Label to show site location, test hole number, sample number, location of hole and depth represented by sample, field classification, blow count, and percent recovery.

The following additional information is needed for liquefaction analyses in active seismic areas: hammer type, rod length, borehole diameter, and if a liner is used.

Figure 5–18 Split-tube or split-barrel sampler

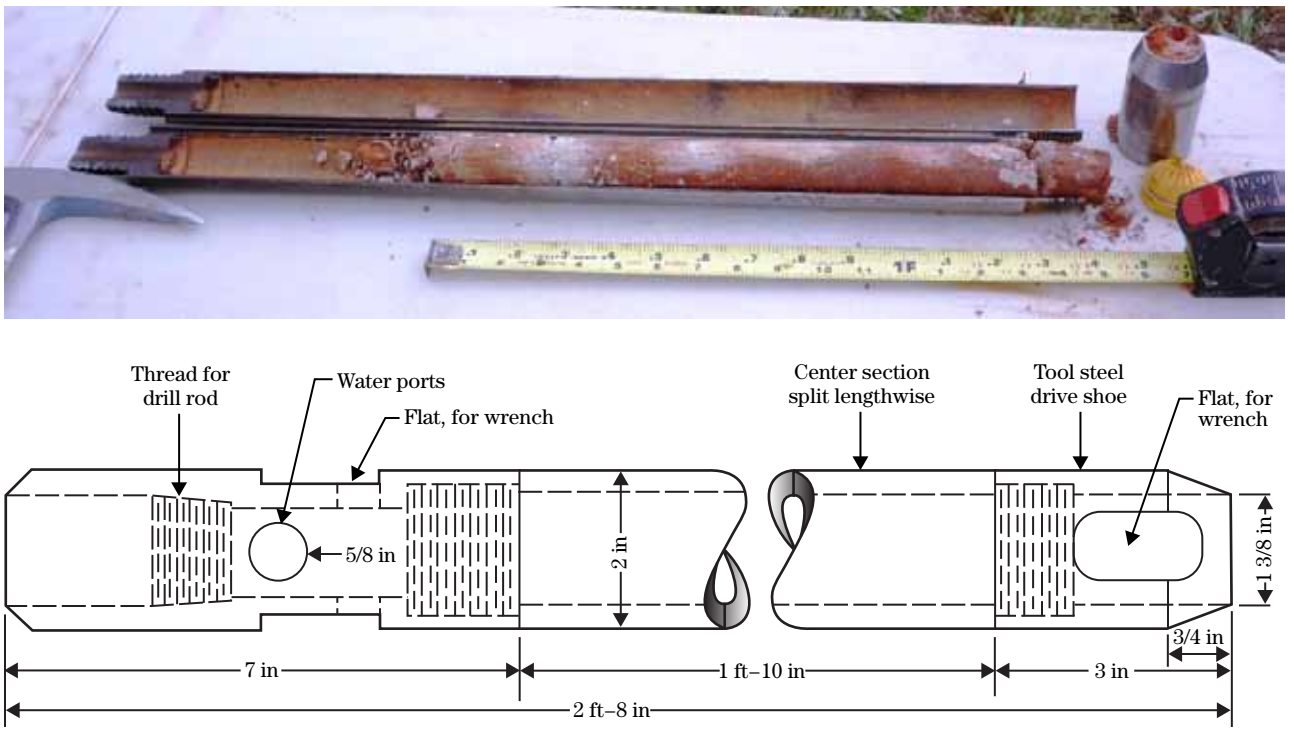

(c) Vane shear test

The vane shear test provides a field method for determining the shearing resistance of in situ earth material. See figure 5–19. The vane, attached to the end of a rod, is forced into an undisturbed soil to be tested and rotated at a constant rate by means of a torque wrench or other calibrated torsion device attached to the rod. The moment or torque required to turn the vane is an indication of the shear strength of cohesive soils. Pocket vane shear test tools are available to provide quick information about shear strength of exposures of earth materials or in excavated pits or trenches.

Figure 5–19 Vane shear tester plus pocket version

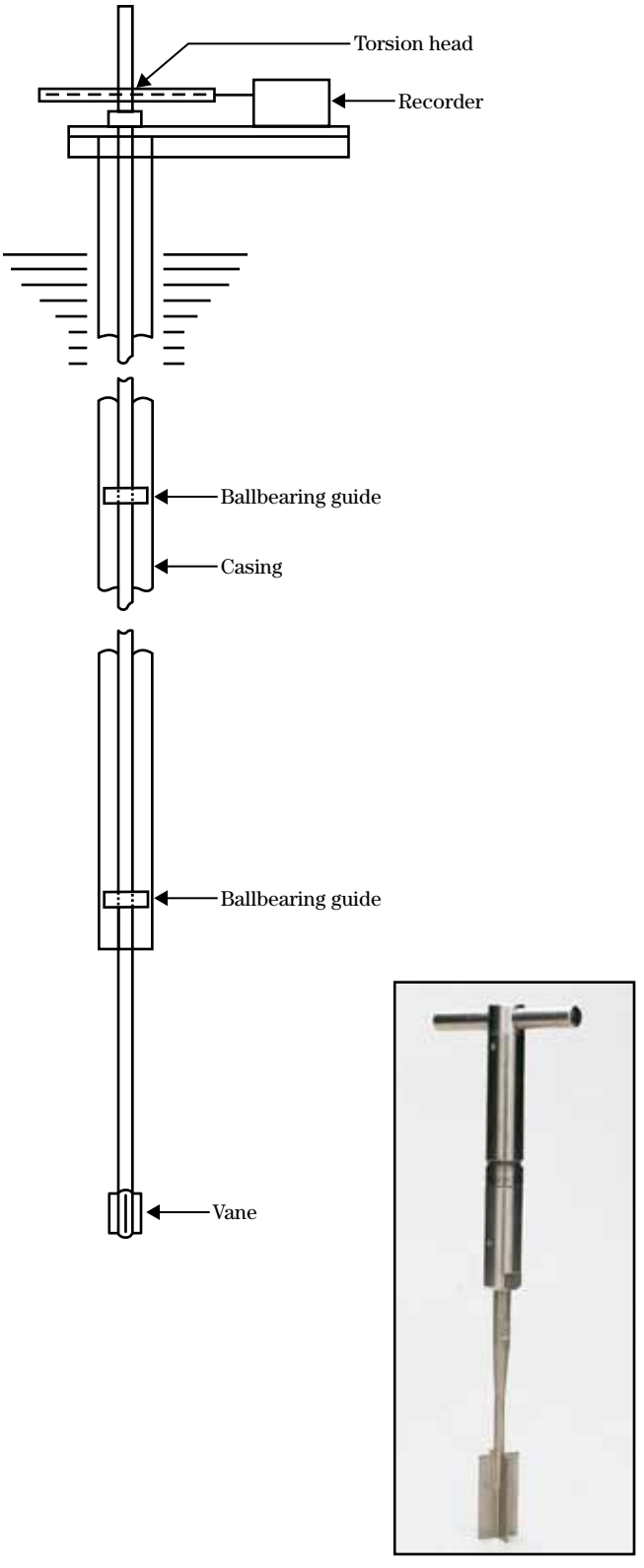

(d) Cone penetrometer testing

Cone penetration testing (CPT) is a fast, effective, and relatively inexpensive system for collecting important soils parameters during a geotechnical site investigation. When used in conjunction with conventional drilling and sampling methods, it provides a more complete description of the subsurface conditions, thereby reducing uncertainty in design and construction.

Cone penetration testing with modern equipment provides continuous readings of point load or tip resistance, sleeve friction, and porewater pressure. The tip of a cone penetrometer is shown in figure 5–20, and standard sizes in figure 5–21.

Tip resistance is theoretically related to the undrained shear strength of a saturated, cohesive material, and measured with an embedded load cell. The sleeve friction is theoretically related to the friction of the horizon being penetrated and is measured using tension load cells embedded in the sleeve. CPT results may be correlated with SPTs and laboratory test information from collected samples. CPT is presented in detail in NEH631.11.

(e) Geophysical methods and remote sensing

Geophysical methods may be used to supplement test holes for geologic exploration. It is desirable to have a limited number of test holes for interpretation of results obtained by geophysical procedures. Geophysical methods are rapid and economical and may reduce the number of test holes required at a site to establish

Figure 5–20 Cone penetrometer tip

geologic continuity. Table 5–9 summarizes some geophysical investigation methods.

With test hole control, geophysical methods may be helpful in delineating the bedrock profile and determining the continuity of strata between test holes. Refer to the U.S. Bureau of Reclamation's (USBR) Engineering Geology Field Manual, Second Edition, 1998, reprinted 2001 for detailed instructions on conducting investigations using geophysical methods and other remote sensing means.

Figure 5–22 shows remote sensing tools used by the NRCS.

Figure 5–21 Dimension and measurements taken by the standards 10-cm^2 and 15-cm^2 pentrometers (ASTM D5778)

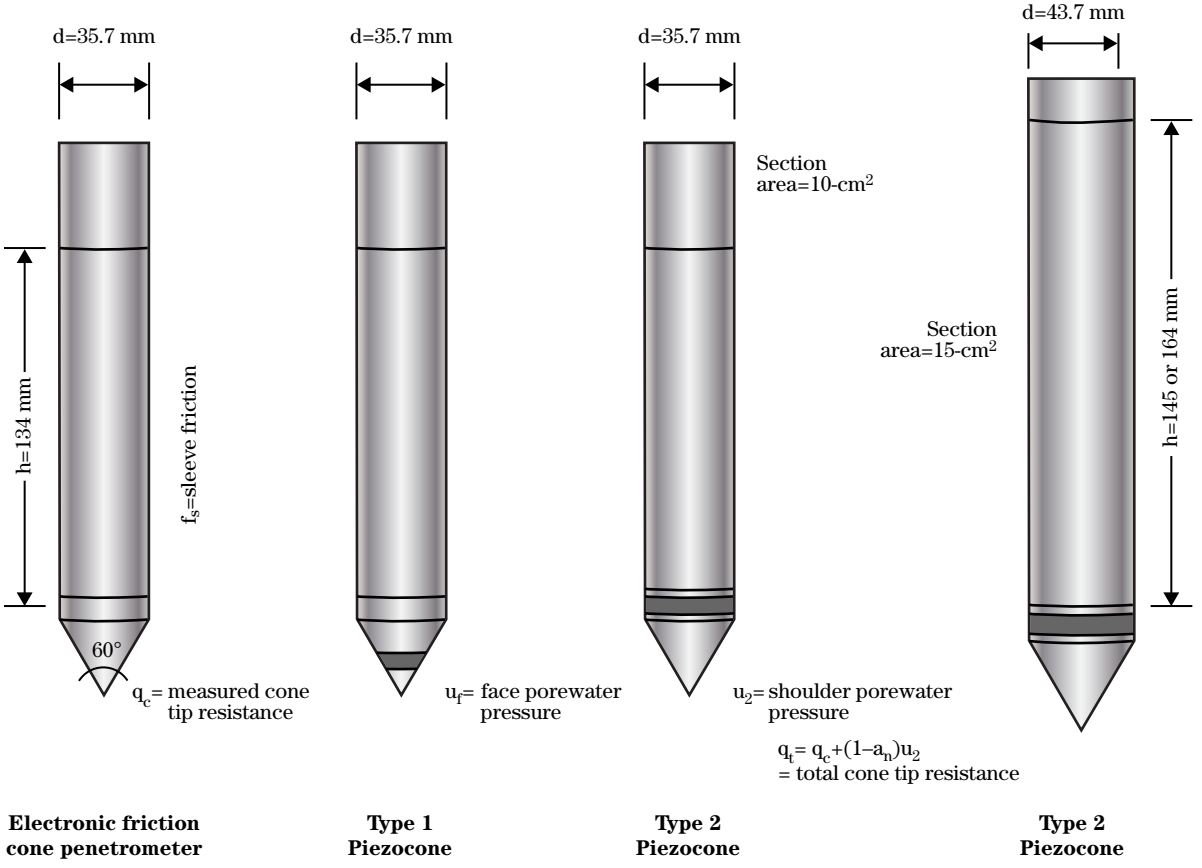

Table 5–9 Geophysical methods, applications, and limitations

Method	Application	Limitations
Surface seismic refraction	Determine bedrock depths and characteristic wave velocities as measured by geophones spaced at intervals.	May be unreliable unless velocities increase with depth and bedrock surface is regular. Data are indirect and represent averages.
High resolution reflection	Determine depths, geometry, and faulting in deep rock strata. Good for depths of a few thousand meters. Useful for mapping offsets in bedrock. Useful for locating groundwater.	Reflected impulses are weak and easily obscured by the direct surface and shallow refraction impulses. Does not provide compression velocities. Computation of depths to stratum changes requires velocity data obtained by other means.
Vibration	Travel time of transverse or shear waves generated by a mechanical vibrator is recorded by seismic detectors. Useful for determining dynamic modulus of subgrade reaction for design of foundations of vibrating structures.	Velocity of wave travel and natural period of vibration gives some indication of soil type. Data are indirect. Usefulness is limited to relatively shallow foundations.
Uphole, downhole, and cross-hole surveys (seismic direct method)	Obtain velocities for particular strata; dynamic properties and rock-mass quality. Energy source in testhole or at surface; geophones on surface or in testhole.	Unreliable for irregular strata or soft soils with large gravel content. Cross-hole measurements best suited for in-place modulus determination.
Electrical resistivity surveys	Locate fresh/salt water boundaries; clean granular and clay strata; rock depth; depth to groundwater. Based on difference in electrical resistivity of strata.	Somewhat cumbersome application due to having to move the rods for subsequent readings.
Electromagnetic conductivity surveys	Measures low frequency magnetic fields induced into the earth. Used for mineral exploration; locating near surface pipes, cables, and drums and contaminant plumes.	Useful for determining leakage from animal waste storage or treatment structures. Used up to depths of about 60 m.
Magnetic measurements	Mineral prospecting and locating large igneous masses. Highly sensitive proton magnetometer measures Earth's magnetic field at closely spaced intervals along a traverse.	Difficult to interpret quantitatively, but indicates the outline of faults, bedrock, buried utilities, or metallic objects in landfills.
Gravity measurements	Detect major subsurface structures, faults, domes, intrusions, and cavities. Based on differences in density of subsurface materials.	Not suitable for shallow depth determination but useful in regional studies. Some application in locating caverns in limestone.
Ground-penetrating radar	Locate pipe or other buried objects, bedrock, boulders, near surface cavities, extent of piping caused by sink hole and leakage in dams. Useful for high-resolution mapping of near-surface geology.	Does not provide depths or engineering properties. Shallow penetration. Silts, clays, salts, saline water, the water table, or other conductive materials severely restrict penetration of radar pulses.
Geophysical well logging	SP, resistivity, natural gamma, neutron, delayed fission neutron, caliper	Need good description (logs) of earth materials to make correct correlations. Requires experience in testing and interpreting results.

Figure 5–22 Remote sensing tools used by the NRCS

(a) Portable electromagnetic imaging tool (Geonics EM–31)

(b) Ground penetrating radar

(c) Portable electromagnetic imaging tool (Geonics EM–34)

(1) Seismic surveys

The seismic refraction method is based on the variable rate of transmission of seismic or shock waves through earth materials. The nature of material is inferred from the rate of transmission of sound. A simplified diagram of a seismic refraction test is shown in figure 5–23. Typical rates of transmission for different types of materials are shown in table 5–10.

Figure 5–23 A simplified seismic refraction test (USBR 1998)

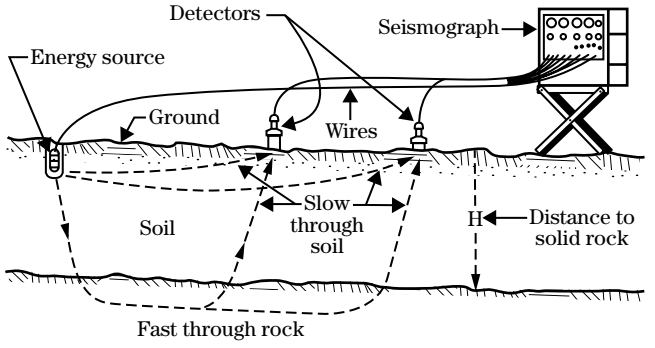

Table 5–10 Typical sound-travel velocities of earth materials (USBR 1998)

Earth Material	Velocity ft/s	Velocity m/s
Dry silt, sand, loose gravel, loam, loose rock, talus, and moist fine-grained topsoil	600–2,500	200–800
Compact till, indurated clays, gravel below water table, *compact clayey gravel, sand, and sand-clay	2,000–10,000	600–3,000
Weathered, fractured, or partly decomposed rock	2,500–7,500	800–2,300
Shale	2,500–11,000	800–3,400
Sandstone	5,000–14,000	1,500–4,000
Limestone, chalk	6,000–20,000	2,000–6,100
Igneous rock	12,000–20,000	3,700–6,100
Metamorphic rock	10,000–16,000	3,100–4,900
*Water (saturated materials should have velocities equal to or exceeding that of water)	4,700	1,400

An energy source is used to generate the seismic wave and can be explosive or percussive, depending on the required depth of analysis. The seismic wave's time of arrival is recorded at several surface detection points. The travel time of the wave to these recording points is measured, and the wave velocity of different strata may be calculated. The depths and probable character of various beds or layers can be inferred from these data through analysis and correlation with known information about the earth materials and hydrogeology of the site.

(2) Electrical resistivity and conductivity imaging

The relative resistivity and conductivity of earth materials can be determined readily by causing an electrical current to flow through the materials being tested. A diagram of a resistivity apparatus using in-the-ground probes is shown in figure 5–24. A general range in earth material resistivity values is show in table 5–11.

Figure 5–24 Diagram of resistivity apparatus

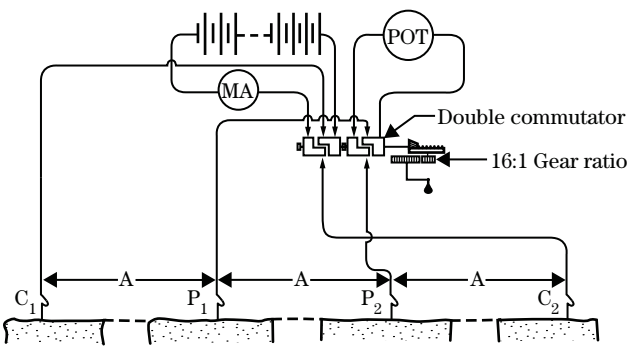

Table 5–11 Representative values of resistivity of earth materials

Earth material	Resistivity (ohm-m)
Clay and saturated silt	1–100
Sandy clay and wet silty sand	100–250
Clayey sand and saturated sand	250–500
Sand	500–1,500
Gravel	1,500–5,000
Weathered rock	1,000–2,000
Sound rock	1,500–40,000

The electrical resistivity method and refraction seismographs have been complementing each other with good results, particularly in delineating gravel lenses, depth to bedrock, and depth to groundwater.

(f) Permeability investigations

Permeability is the property of a geologic material to transmit a fluid, and is a function of the geologic material alone. It is expressed in units of length, squared (L^2). Hydraulic conductivity (K), formerly known as the coefficient of permeability, is the property of geologic materials to transmit water at a standard temperature and density. This value is used in engineering design and is expressed as the volume of water that will flow through a unit cross-sectional area in unit time, under unit hydraulic gradient at a standard temperature of 68 °F (20 °C). The NRCS most commonly expresses K in cubic feet per square foot of cross-sectional area under a hydraulic gradient of one foot per foot ($ft^3/ft^2/ft^2/d$), or feet per day (ft/d).

Figure 5–25 shows the average range of permeability values for different geologic materials. To convert from meters per day to gallons per day per square foot, 1 meter per day = 24.5 gallons per day per square foot.

Water loss in foundations differs between unconsolidated materials and bedrock and affects the design and performance of a structure. Permeability tests are used in groundwater investigations and are an important part of any investigation that is conducted to determine the stability and safety of a dam or other structure. The field tests described here are conducted in individual borings.

Field permeability tests only provide an approximate value for hydraulic conductivity; the values are not considered to be precise. Their reliability depends on the homogeneity of the strata. They do give a good indication of relative values at various depths and in different strata; and they are simple procedures that can be performed during normal drilling operations.

The following are brief definitions of other properties of geologic materials associated with the behavior of water in porous materials.

- Average linear velocity, $\bar{v}$, the specific yield divided by the porosity.

- Porosity, $n = V_v/V_t$, the percentage of the bulk volume of a rock or soil, V_t, that is occupied by interstices, whether isolated or connected. It is also expressed as the specific yield plus the specific retention, $n = S_r + S_y$.
- Specific retention, S_r, the ratio of the volume of water that a given body of rock or soil can hold against the pull of gravity to the volume of the body itself, expressed as a percentage.
- Specific yield, S_y, the ratio of the volume of water that a given mass of saturated rock or soil yields by gravity to the volume of that mass, expressed as a percentage.

Field permeability tests are generally divided into three types: constant-head gravity tests, falling-head gravity tests, and pressure tests. Pumping-in constant-head tests are performed in unconsolidated materials with moderate to high permeability. Pressure tests are performed in consolidated materials that will allow the borehole to stand open. Falling-head tests are performed in unconsolidated materials of low to very low permeability using a well permeameter.

If the project is the rehabilitation of an existing structure, information may be required about geologic conditions of the foundation. If drilling is required, using drilling fluids consisting of water, compressed air, air with foam, or any type of gas is prohibited (USACE, 1997).

Drilling fluids occasionally damage embankments and foundations during geotechnical investigations. While using air, or air with foam, loss of circulation can occur and cause pneumatic fracturing of the embankment, causing connections to other borings and blowouts on embankment slopes. Erosion and/or hydraulic fracturing of the embankment or foundation materials can also occur when water is used as the circulating medium.

Drilling with augers or rotary systems using an engineered drilling fluid or mud is acceptable, if used with caution. The viscosity, density, and gel strength of the mud should be kept to a minimum. Drilling tools should be raised and lowered gently, and the pump engaged slowly. The recirculation of solids in the drilling fluid should be minimized and monitored carefully. The hole should be completed by setting casing completely through the embankment and seating it into the foundation materials.

Figure 5–25 Typical hydraulic conductivity (K) values for consolidated and unconsolidated aquifers (after Freeze and Cherry 1979)

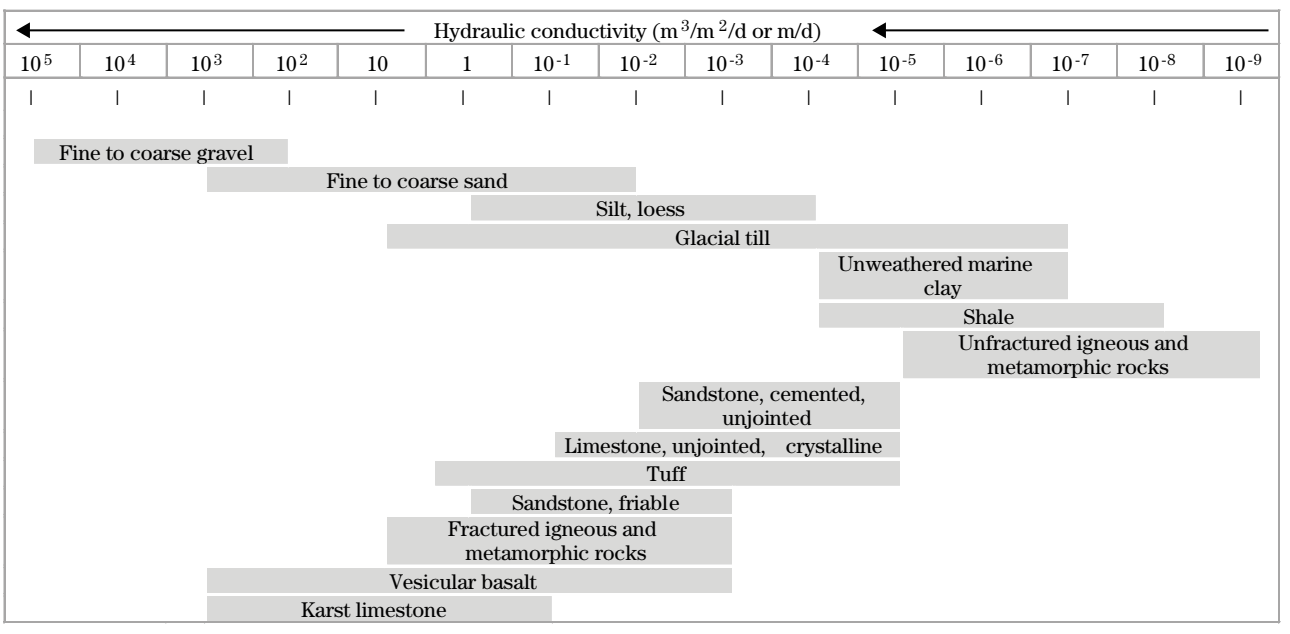

(1) Pressure testing

Water pressure testing is carried out by sealing off portions of test holes, introducing water under pressure, and measuring the rate of water intake into the formation. Pressure testing permits the delineation of zones of leakage for estimating grouting requirements or other treatments that may be needed to reduce water movement, and it is also used to estimate permeability of in-place materials during groundwater investigations.

Where pressure testing is required, the tests should be performed every 5 feet or smaller intervals to delineate specific zones within the borehole. Various interpretations of pressure test results are illustrated in figure 5–26.

If the testing is performed near the auxiliary spillway, the maximum pressure should not exceed 0.43 times the vertical distance between the test elevation and the elevation of the auxiliary spillway.

(2) Pressure-test equipment

The apparatus commonly used for pressure testing foundations in rock consists of expansion plugs or packers set 5 feet apart, which are expanded to seal off sections of a drill hole (fig. 5–27). Water lines are arranged so that water may be introduced either below the bottom expansion joint or from a perforated pipe between the two expansion joints. The water lines are connected through a pressure relief valve, pressure gage, and water meter to a pump.

It is advisable to have more than one set of packers because of rupture or other failure.

Water pumps having a minimum capacity of 50 gallons per minute at discharge pressures of 100 pounds per square inch (lb/in^2) are needed. Additional equipment includes accessory valves, gages, stopcocks, plugs, and tools necessary for maintaining uninterrupted tests.

(3) Open-end pressure test procedures

Open-end tests can be performed in permeable formations either above or below the static water level (SWL), using either water pressure or gravity flow. The test is based on the amount of water accepted by the formation at a given head through the bottom of a pipe or casing. The stratum being tested should have a thickness of at least 10 times the diameter of the test well.

Clean water must be used to obtain valid results, as the presence of only a few parts per million of fines can plug soil and rock voids and cause serious errors in the test results. The temperature of the water being added should be higher than the temperature of the groundwater in order to prevent the formation of air bubbles in the formation. Air bubbles can also plug voids and cause serious errors.

- Measure the SWL.
- Add clear water to the hole, and maintain a constant water level in the casing until a steady rate of intake is established. If pressure is applied, water should be pumped until both the rates of inflow and pressure remain steady.
- Above the SWL, a constant water level and intake rate are rarely attained, and a slight surging of the water level or pressure may occur. Surging of the water level within a few tenths of a foot at a constant rate of flow for approximately 5 minutes is considered satisfactory. If the oscillations are stronger, stop the inflow and wait until the oscillations dampen to the above conditions before proceeding with the test. An antisurge device consisting of a capped, air-filled stand pipe placed in the supply line near the pressure gage will dampen the surges and make the gage easier to read.
- The test should be run for 10 minutes using a water meter to measure the flow.
- Compute the rate of flow (Q) by dividing the volume by time; record in gallons per minute.

Above the SWL, head (h) is measured from the elevation at which the flow can be maintained during the test to the elevation at the bottom of the hole. Below the SWL, h is measured from the elevation at which the flow can be maintained during the test to the SWL. If pressure is applied, h is measured from the bottom of the hole or the normal water level to the elevation of the gage, plus the applied pressure converted to feet ($1\ lb/in^2 = 2.31$ ft). The radius (r) is the inside radius of the casing. Figure 5–28 illustrates the conditions and procedures described.

Figure 5–26 Sample plots of pressure testing data

(a) Pressure holding test

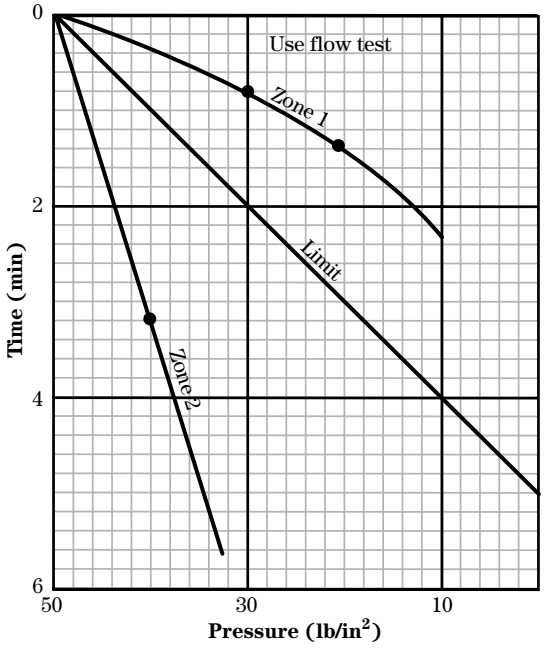

(c) Self-sealing formation (no leakage problem)

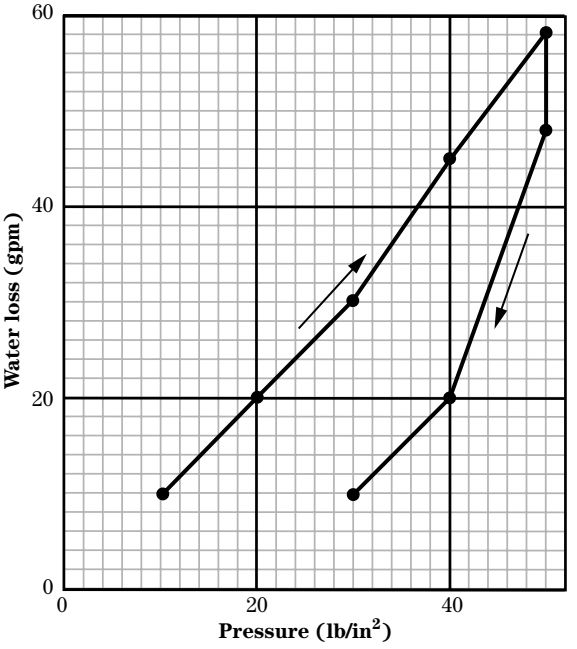

(b) Fissures opened by increased pressure (leakage problem)

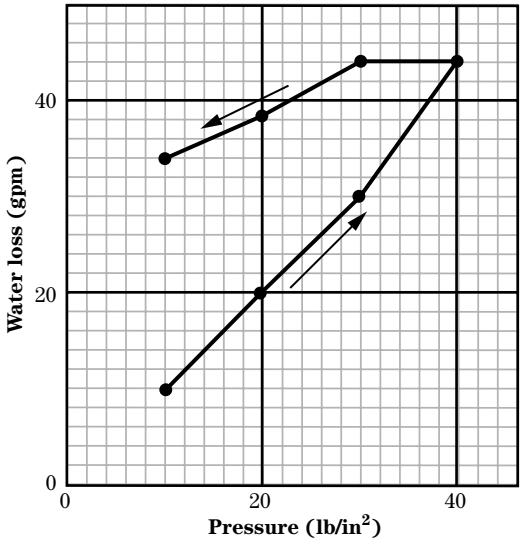

(d) Stable condition (leakage problem)

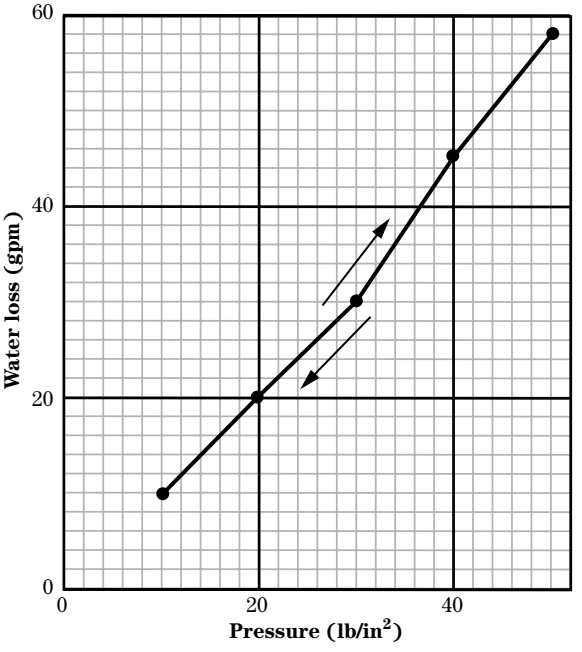

Figure 5–27 Pressure-testing tools

(a) Single packer

(b) Double packer

(c) Cross section of single packer testing tool

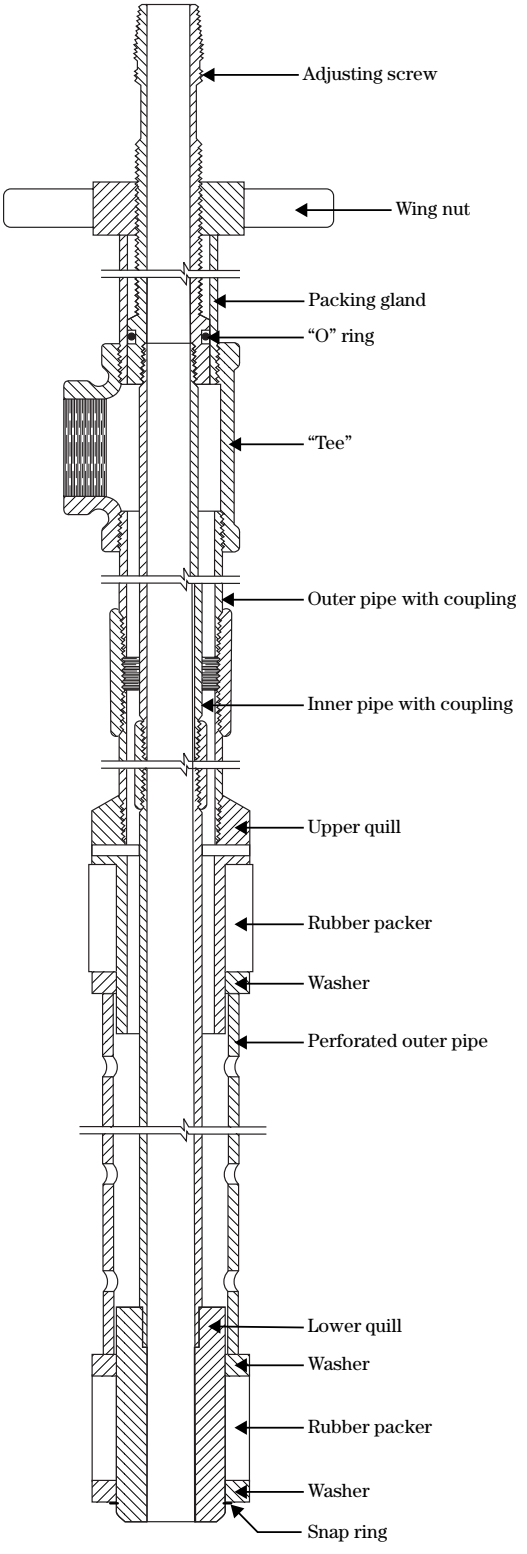

Electric analog experiments (USBR 2006) gave the following relationship for hydraulic conductivity using the English system of measurements:

$$K = \frac{Q}{5.5rh} \qquad \text{(eq. 5–1)}$$

where:
K = coefficient of permeability (ft/d)
Q = constant rate of flow into the hole (ft^3/d)
r = internal radius of the bottom of the casing (ft)
h = differential head of water (ft)

The use of equation 5–1 is shown in the following example:

where:
Q = 1,600 ft^3/d
r = 1.5 in or 0.125 ft
h = 7 ft

$$K = \frac{1,600}{5.5 \times 0.125 \times 7}$$
$$= 332\ ft^3/ft^2/d \text{ or } ft/d$$

If gallons per minute (gpm) are used, the following equation is used:

$$K = \frac{420Q}{rH} \qquad \text{(eq. 5–2)}$$

where:
K = hydraulic conductivity, ft/d
Q = constant rate of flow into the hole, gpm
r = internal radius of the casing, in
H = differential head of water, ft

Converting gpm to ft^3/d (1 gpm = 192.5 ft^3/d)

$$Q = \frac{1,600\ ft^3/d}{192.5\ ft^3/d/gpm}$$
$$= 8.3 \text{ gpm}$$

where:
r = 1.5 in
h = 7 ft

$$K = \frac{420 \times 8.3}{1.5 \times 7}$$
$$= \frac{3,486}{10.5}$$
$$= 332\ ft^3/ft^2/d \text{ or } ft/d$$

This test is an approximation and should not be considered to give precise values for permeability. It has the advantage of being a simple test that can be performed during normal drilling operations. It gives a good indication of relative permeabilities at various depths. The test should not be performed with the bottom of the hole less than distance of 10r from either the top or bottom of the strata being tested.

Figure 5–28 Open-end permeability test

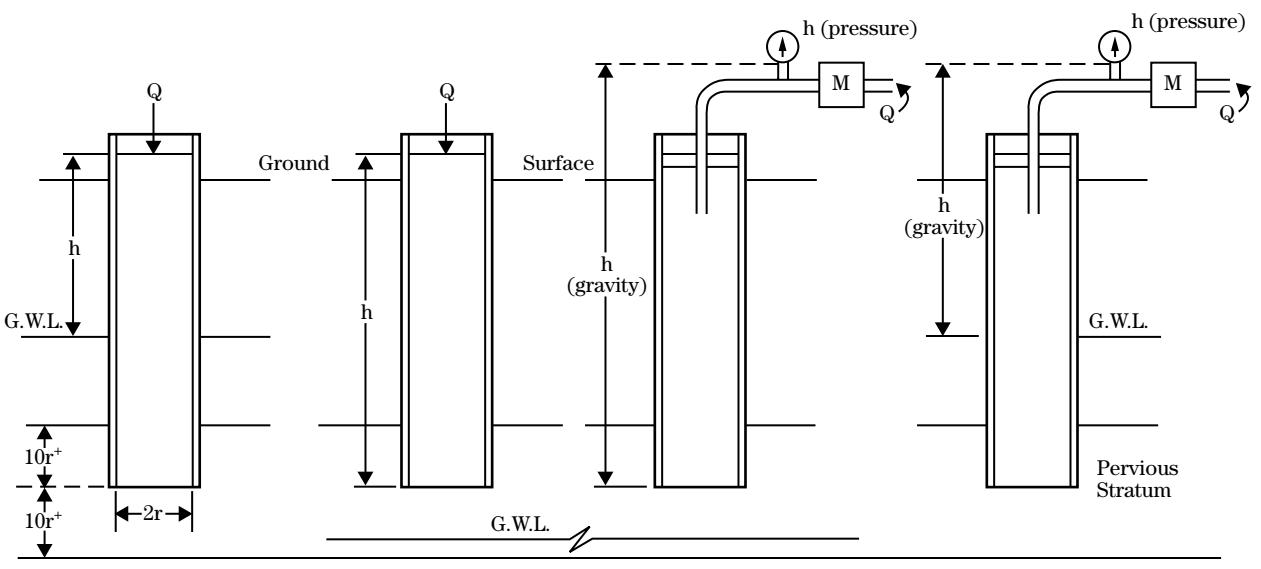

(4) Pressure-holding test

The following is a listing of the procedures used when conducting a pressure-holding test:

Step 1 Determine maximum pressure for the initial test. It should not exceed one pound square inch per foot of hole depth at the upper packer (1 lb/in^2 = 2.31 ft).

Step 2 Lower the packer assembly into the hole to the predetermined depth. The test is most effective when the bottom of the hole is at a distance of more than ten times the radius of the drill hole from either the top or bottom of the strata under investigation.

Step 3 Expand or inflate the packers to isolate the section to be tested. While expansion plugs are also used in the industry, for simplicity they are included within the term "packers" here.

Step 4 Pump water into the hole, forcing it through the drill hole into the surrounding strata.

Step 5 Adjust the water pressure until the predetermined maximum pressure is achieved in the boring. Close stopcocks and cut off the pump. Maximum water pressure at the upper packer for the holding test should not exceed one psi per foot of hole depth.

Step 6 Record the pressure drop at regular intervals; determine the rate of pressure loss by dividing the change in pressure by time. A pressure drop of less than 10 pounds per square inch per minute is evidence that no appreciable leakage occurs in the zone tested.

Step 7 If the pressure drop exceeds 10 pounds per square inch per minute, a packer-type flow test is required. This procedure is outlined in the next section, Pressure test using packers.

Step 8 Where additional testing is indicated, a packer-type flow test may be used (see pumping-in tests). It may be desirable to determine rates of flow at several different pressures in ascending order from the lower to the higher pressure, depending on the earth materials being tested. The maximum pressure should not exceed 0.43 times the vertical distance in feet between the test elevation and the elevation of the auxiliary spillway. Then recheck these rates in descending order from the higher to the lower pressure (fig. 5–29).

Step 9 Release water pressure, deflate the packers, and move assembly to the next interval to be tested. Sample test results are plotted on figure 5–27.

(5) Pressure test using packers

Packer tests are most commonly used when the pressure in the initial pressure holding tests drops by more than 10 pounds per square inch per minute. Packer tests may require the construction of a filter pack, unlike the simpler pressure holding tests. Firstly, the determination must be made whether the loss of more than 10 pounds per square inch is flowing evenly throughout the interval, or through a particular stratum. Particular sections within a completed hole can be isolated for testing by accurate placement of the packers.

In unconsolidated materials where the hole will not stand open, packer tests are conducted either in the space between the bottom of the hole and the end of the casing or by using a packer set at the bottom of the casing. No voids can be allowed in the annular space between the outside of the casing and the wall of the hole. If areas within the annulus allow water to escape upward outside the casing, the test results will be erroneous. This can be prevented by driving the casing a few inches beyond the bottom of the bored hole and cleaning the cuttings out of the hole or the construction of a filter pack.

Figure 5–29 Packer-type permeability test

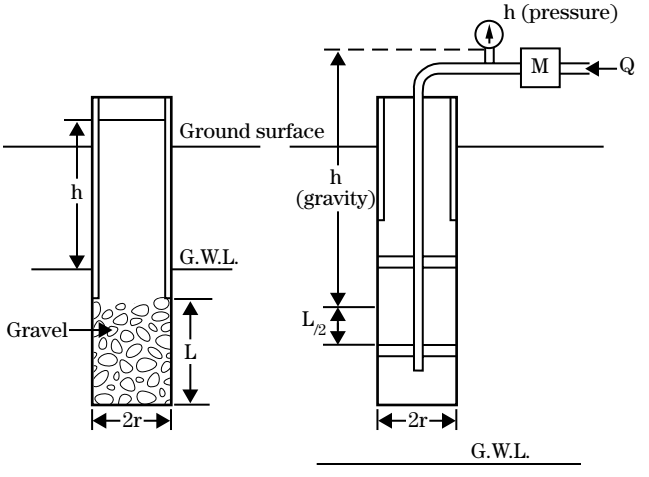

Down-stage pressure test—If the geologic materials are unconsolidated, it is unlikely that a boring will stay open long enough for the testing equipment to be inserted. In this situation, a section of the hole is drilled and tested, then the hole is deepened and the underlying interval is tested. This method is repeated for the entire thickness of the geologic materials under investigation. The following outlines the procedure for downstage pressure testing:

- Drive the casing to the bottom of the hole and remove the cuttings.
- Accurately measure the depth of the hole and determine its volume in cubic feet.
- Calculate the quantity of coarse sand or gravel that will fill the hole to an elevation just above the interval to be tested. The permeability of the added gravel must exceed the permeability of the strata being tested by the ratio of the cylindrical area of the gravel-packed section divided by the end area of the casing. Otherwise, grossly erroneous rates will result. This determination is most frequently based on judgment, because the permeability of the formation is usually unknown. If the length of the test section is kept short, 3/8- to a 1/2-inch gravel will usually be adequate for testing unsorted sands and gravels.
- Withdraw the casing to the top of the test section. Be careful not to pull the casing above the top of the gravel inside the hole.
- Accurately measure the depth to the gravel pack. Length (L) is calculated by subtracting the depth to the gravel pack from the depth of the bottom of the hole.
- Determine the mean radius (r) of the test section by the following equation:

$$r = \sqrt{\frac{V\ (ft^3)}{\pi L\ (ft)}} \qquad \text{(eq. 5–3)}$$

where:
r = radius of test section
V = volume of gravel added to hole
L = length of test section

Up-stage pressure test—Up-stage testing is performed in consolidated materials that will stay open without casing. Using this procedure, the hole is completed to the final depth and the cuttings removed. The hole is then filled with water and testing begins from the bottom upward. The entire hole can be tested in one operation simply by pulling the packers up from the bottom to the next interval to be tested. Its advantage is that it is not necessary to pull and then reenter the equipment several times in one hole.

In tests below the SWL, h is measured in the same way as for the open-end test, from the bottom of the hole or the normal water level to the elevation of the gage, plus the applied pressure converted to feet (1 lb/in^2 read from gage = 2.31 ft). Above the SWL it is measured from the mid-point of the test section to the pressure gage plus the applied pressure in feet of water (fig. 5–29).

Where the length of the test section (L) is equal to or more than five times the diameter of the hole ($L \geq 10r$), the equation used to compute the hydraulic conductivity is:

$$K = \frac{Q}{Lh} \log_e \frac{L}{r} \qquad \text{(eq. 5–4)}$$

where:
K = hydraulic conductivity, ft^3/d
Q = constant rate of flow into the hole, cubic feet per day, or ft^3/d = (gpm × 60 m/h × 24 h/d)/7.5 gal/ft^3
L = length of the test section, ft
h = differential head of water, ft
r = radius of test section, ft

If the length of the section being tested is less than 5 times the diameter, the relation is best described by changing the natural logarithm, $\log_e$ or L/r in the above equation, to the arc hyperbolic sine, or ($\sinh^{-1}$) (L/2r). The equation then becomes:

$$K = \frac{Q}{2\pi Lh} \sinh^{-1}\left(L/2r\right) \qquad \text{(eq. 5–5)}$$

Again, any consistent set of units can be used. If, however, K is in cubic feet per square feet per day, or feet per day, Q in gallons per minute, and L, h, and r in feet, the equations can be rewritten as:

$$K = \frac{30.6Q}{Lh} \log_e (L/r) \qquad \text{(eq. 5–6)}$$

$$K = \frac{30.6Q}{Lh}\sinh^{-1}\left(\frac{L}{2r}\right) \qquad \text{(eq. 5–7)}$$

Following is an example of the use of the previous equations and tables:

Given:

r = 0.125 ft
L = 2.1 ft (if L > 10r, use equation 5–6)
h = $h_g + h_p$
h_g = 3.7 feet, distance from gage to the SWL, or the midpoint between packers
h_p = 6 lb/in^2 (gage reading) or 13.9 ft ($h_p \times 2.31$)
h_t = 3.7 + 13.9 = 17.6
Q = 3.6 gpm

$$K = \frac{Q}{Lh}\log_e \frac{L}{r}$$

$$\frac{L}{2r} = \frac{2.1}{0.125}$$
$$= \log_e 8.4$$
$$= 2.82$$

$$K = \frac{(30.6 \times 3.6 \times 2.82)}{(2.1 \times 17.56)} = 8.42 \text{ ft/d}$$

(6) Well permeameter method

Open-end and packer tests are the most practical in fairly permeable materials where the hydraulic conductivity is 1 foot per day or greater. The well permeameter is best suited for materials of low permeability. It is often used in reservoir bottoms and canals to determine leakage potentials.

Since the rate of inflow (Q) is usually very low, flow meters cannot be used and the volume of water must be measured by some other method. An open-ended drum, calibrated in 1-gallon increments, is a convenient device. Float valves must be used to maintain the water level as the test is of long duration and inflow rates are low.

Any standard bob-float, stock-watering valve with sufficient capacity to maintain the water level and a counterbalanced operating arm can be used. The counterbalance allows the float to be suspended from the operating arm by means of a chain that can be lowered into the hole. The elevation of the water surface in the hole is controlled by the length of the chain. Figure 5–30 is an illustration of the test apparatus.

Because of the wide range of water temperatures at shallow depths, the temperature of the water in the hole should be taken, and the test results be corrected to a standard temperature, either 20 °C or 60 °F. If the test is of long duration, the temperature should be taken several times and averaged to make the correction. Table 5–12 lists the factors by which the hydraulic conductivity test results must be multiplied to make the temperature corrections (Ct) in the three well-permeameter equations. They are derived by dividing the viscosity of water in the given temperature by the viscosity of water at the standard temperature.

The test should be run long enough to develop a saturated envelope in the soil around the well, but not long enough to build up the water table. In more permeable materials, the test should be run for several hours until

Figure 5–30 Well-permeameter test

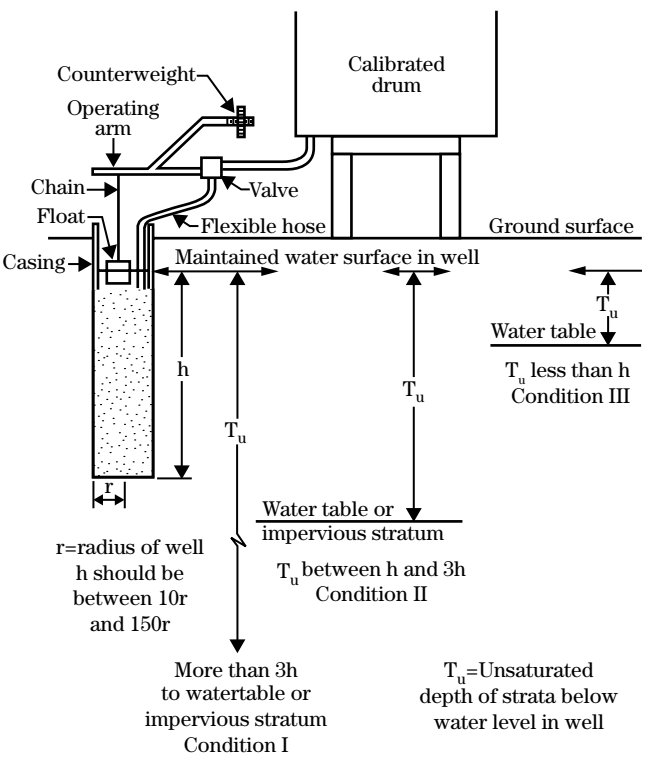

a graph of time plotted against accumulative discharge is a straight line, indicating that a steady rate of discharge has been established. The straight portion of the curve should then be used for determining Q and calculating the hydraulic conductivity.

If a steady rate of discharge has not been established after approximately eight hours, the minimum volume to be discharged can be determined from the following equation:

$$V_{min} = 2.09S_y\left[h\sqrt{2/\sinh^{-1}\left(\frac{h}{r}\right)-1}\right]^3 \quad \text{(eq. 5–8)}$$

Table 5–12 Temperature correction factors, C_t, for use in well permeameter calculations for hydraulic conductivity (K)

Water temp. (degrees)		Correction factor (C_t)	
ºC	ºF	20 ºC	60 ºF
10	50.0	1.30	1.17
11	51.8	1.27	1.14
12	53.6	1.24	1.11
13	55.4	1.20	1.08
14	57.2	1.17	1. 05
15	59.0	1.13	1.02
16	60.8	1.10	0.99
17	62.6	1.08	0.97
18	64.4	1.05	0.94
19	66.2	1.02	0.92
20	68.0	1.00	0.90
21	69.8	0.98	0.86
22	71.6	0.95	0.85
23	73.4	0.93	0.84
24	75.2	0.91	0.82
25	77.0	0.89	0.80
26	78.8	0.87	0.78
27	80.6	0.85	0.76
28	82.4	0.83	0.75
29	84.2	0.81	0.73
30	86.0	0.80	0.71

where:
V_{min} = minimum volume to be discharged
S_y = specific yield of soil being tested
h = height of water in well
r = radius of well

The equation requires that the specific yield (S_y) of the strata being tested be known. Specific yield is the ratio of the volume of water that a given mass of saturated rock or soil yields by gravity to the volume of that mass, expressed as a percentage.

For common soils, specific yields vary from 0.10 for fine-grained soils to 0.35 for coarse-grained soils. When the specific yield of the soil is not known, 0.35 should be used to give a conservative value for minimum volume. The test should be discontinued when the minimum volume has been discharged. Minimum volume can be determined from table 5–13, when h and r are known and specific yield is assumed to be 0.35. If the specific yield of the soil is known, the minimum volume determined from table 5–13 should be multiplied by the fraction S_y, where S_y is the known specific yield of the soil. The field data needed to compute hydraulic conductivity are the:

- rate of flow into the well, gpm
- mean radius of the well, ft
- height of the column of water in the well, measured from the bottom of the hole to the maintained water level, ft
- depth to the SWL, in feet, if it is shallow; or the depth to either an impervious layer or the SWL (whichever is higher) if the SWL is deep

The temperature of the water in the well should be determined to be sure that the water being used is warmer than the soil. As illustrated in figure 5–29, three different conditions normally exist in the field. They are based on the relationship of the location of the water level in the well with either the SWL or an impervious layer. Each requires a slightly different equation:

where:
K = hydraulic conductivity ($ft^3/ft^2/d$ or ft/d)
h = height of water in well, ft, measured from the bottom of the well (ft) to maintain water level
r = radius of the well (ft)
Q = constant rate of flow into the hole (gpm)

T_u = unsaturated thickness between the water level in the well and the water table or impervious layer (ft)

C_t = correction to standard temperature

Condition I exists when the distance from the water surface in the well to the water table or an impervious layer is greater than three times the height of water in the well. For this condition, equation 5–9 is used.

Equation for condition I:

$$K = \frac{192\left[\sinh^{-1}\left(\frac{h}{r}\right) - 1\right]\frac{Q}{2\pi}}{h^2} C_t \qquad \text{(eq. 5–9)}$$

Condition II exists when the water table is below the bottom of the well, but the depth to the water table or an impervious layer is less than three times the height of water in the well. For this condition, equation 5–10 is used.

Equation for condition II

$$K = \frac{192\log_e\left(\frac{h}{r}\right)\frac{Q}{2\pi}}{h^2\left(\frac{1}{6} + \frac{T_u}{3h}\right)} C_t \qquad \text{(eq. 5–10)}$$

Condition III exists when the water table is above the bottom of the well. Equation 5–11 is used in this case.

Equation for condition III

$$K = \frac{192\log_e\left(\frac{h}{r}\right)\frac{Q}{2\pi}}{h^2\left(\frac{T_u}{h} - \left(\frac{T_u^2}{2h^2}\right)\right)} C_t \qquad \text{(eq. 5–11)}$$

Table 5–13 Minimum volume, in gallons, to be discharged in well permeameter, where Y_s = 0.35

Radius of well (r)		Height of water in well (h) ft										
in	ft	2	3	4	5	6	7	8	9	10	11	12
1.00	0.083	25	70	145	265	410	620	900	1,230	1,620	2,090	2,660
1.25	0.104	30	80	165	290	450	670	970	1,310	1,720	2,220	2,820
1.50	0.125	35	85	180	310	480	720	1,040	1,390	1,820	2,350	2,980
1.75	0.146	35	95	195	335	510	770	1,110	1,470	1,920	2,480	3,140
2.00	0.167	40	100	210	355	550	820	1,180	1,550	2,020	2,600	3,300
2.25	0.187	40	110	220	380	580	870	1,240	1,630	2,120	2,720	3,460
2.50	0.208	—	115	235	400	610	910	1,310	1,710	2,220	2,840	3,620
2.75	0.229	—	125	250	420	640	960	1,370	1,780	2,320	2,960	3,780
3.00	0.250	—	130	260	440	670	1,000	1,430	1,860	2,410	3,080	3,940
3.25	0.271	—	140	275	460	700	1,050	1,480	1,930	2,510	3,200	—
3.50	0.292	—	145	290	480	730	1,090	1,540	2,010	2,610	3,320	—
3.75	0.312	—	—	300	500	760	1,130	1,590	2,080	2,710	3,440	—
4.00	0.333	—	—	315	520	790	1,170	1,640	2,160	2,800	3,560	—
4.25	0.354	—	—	325	540	820	1,210	1,690	2,230	2,890	3,680	—
4.50	0.375	—	—	340	560	850	1,250	1,740	2,310	2,980	3,800	—
4.75	0.396	—	—	350	580	880	1,290	1,790	2,380	3,070	—	—
5.00	0.417	—	—	—	600	910	1,330	1,840	2,450	3,160	—	—

Examples

Following are examples of each of the three conditions using the appropriate equation:

Example A:

Condition I, where T_u is greater than 3h.

Given:
h = 5 ft
r = 0.125 ft
Q = 0.10 gpm
T_u = 30 ft (if > 3h, use equation 5–9)
T = temperature of water in well = 18 °C

$$K = \frac{192\left[\sinh^{-1}\left(\frac{h}{r}\right)-1\right]\frac{Q}{2\pi}}{h^2}C_t \qquad \text{(eq. 5–9)}$$

$$\frac{h}{r} = \frac{5}{0.125} = 40;\ \sinh^{-1}40 = 4.37$$

$$K = \frac{192(4.37-1)\frac{0.10}{2\pi}}{25}\times 1.05$$

$$= 0.43\ ft^3/ft^2/d \text{ or } ft/d$$

Example B:

Condition II, where T_u > h, but < 3h

Given:
h = 5 ft
r = 0.125 ft
Q = 0.10 gpm
T_u = 6 feet (> h but < 3h, use equation 5–10)
T = temperature of water in well = 18 °C

$$K = \frac{192\log_e\left(\frac{h}{r}\right)\frac{Q}{2\pi}}{h^2\left(\frac{1}{6}+\frac{T_u}{3h}\right)}C_t \qquad \text{(eq. 5–10)}$$

$$\log_e 40 = 3.69$$

$$K = \frac{192\times 3.69\times\frac{0.10}{6.28}}{25\left(\frac{1}{6}+\frac{6}{15}\right)}\times 1.05$$

$$= 0.84\ ft^3/ft^2/d \text{ or } ft/d$$

Example C:

Condition III, where T_u < h

Given:
h = 5 ft
r = 0.125 ft
Q = 0.10 gpm
T_u = 3 ft (< h, use equation 4–11)
T = temperature of water in well = 18 °C

$$K = \frac{192\log_e\left(\frac{h}{r}\right)\frac{Q}{2\pi}}{h^2\left(\frac{T_u}{h}-\left(\frac{T_u^2}{2h^2}\right)\right)}C_t \qquad \text{(eq. 5–11)}$$

$$\log_e 40 = 3.69$$

$$K = \frac{192\times 3.69\times\frac{0.10}{6.28}}{25\left(\frac{3}{5}-\frac{9}{50}\right)}\times 1.05$$

$$= 1.13\ ft^3/ft^2/d \text{ or } ft/d$$

631.0506 References

Acker, W.L. III. 1974. Basic procedures for soil sampling and core drilling. Acker Drill Company, Scranton, PA. 246 pp.

Freeze, R.A., and J.A. Cherry. 1979. Groundwater. Prentice Hall, Inc., Englewood Cliffs, NJ. 604 pp.

U.S. Army Corps of Engineers. 1997. Engineer Regulation, ER 1110–1–1807, Procedures for drilling in earth embankments, Washington, DC.

U. S. Department of the Interior, Bureau of Reclamation. 1998. Engineering geology field manual. Second edition, 2001 reprint. Washington, DC.

U. S. Department of the Interior, Bureau of Reclamation. 2006. Design of small dams, a water resources technical publication. Washington, DC.