U. S. Department of Agriculture
Soil Conservation Service
Engineering Division

Technical Release No. 31
Design Unit
June, 1966

STRUCTURAL ANALYSIS AND DESIGN AT LOW STAGE INLETS

This discussion is concerned with procedures for structural analysis and design of riser wall sections at low stage inlet openings. It is assumed that the inside horizontal proportions of the risers are D x 3D. The design criteria is given in Chapter 2, Technical Release No. 30, "Structural Design of Standard Covered Risers ".

The structural behavior of riser walls, at locations away from any discontinuity of section, is that of one-way horizontal bending. The determination of wall thickness and required steel for such walls is therefore relatively straightforward. The presence of one or more openings in the endwalls changes the structural behavior from one-way to two-way slab behavior. A theoretical treatment of the problem would be quite complex.

The problem may be handled approximately in several ways. The procedures which follow are approximate. They are conservative in that the treatment neglects two-way action with its division of loading, and breaks the problem down into one-way elements which of themselves provide an adequate method of resisting the imposed loads.

Opening in One Endwall

It is assumed that the uniformly distributed wall load is resisted entirely by horizontal pinned ended frame action. The pinned ended frame reactions are carried by vertical beam action into the adjacent closed sections.

The forces, shears, and moments of interest and the suggested horizontal steel layout are shown in Figure 1 where:

q = uniformly distributed load, klf/ft
N_E = direct compressive force in the endwall, kips/ft
N_R = reaction load on reaction beam, kips/ft
N_S = direct compressive force in the sidewall, kips/ft
V_{PI} = shear in sidewall at point of contraflexure, kips/ft
V_{SF} = shear in sidewall at face of endwall, kips/ft
V_{SR} = shear in sidewall at face of reaction beam, kips/ft
M_K = moment at corner of frame, ft kips/ft
M_{EF} = moment in endwall at face of sidewall, ft kips/ft
M_{EC} = moment in endwall at center of endwall, ft kips/ft
M_{SF} = moment in sidewall at face of endwall, ft kips/ft
M_{SX} = maximum positive moment in sidewall, ft kips/ft

This Technical Release was prepared by Edwin S. Alling under the supervision of Paul D. Doubt, Head, Design Unit, Design Branch at Hyattsville, Maryland.

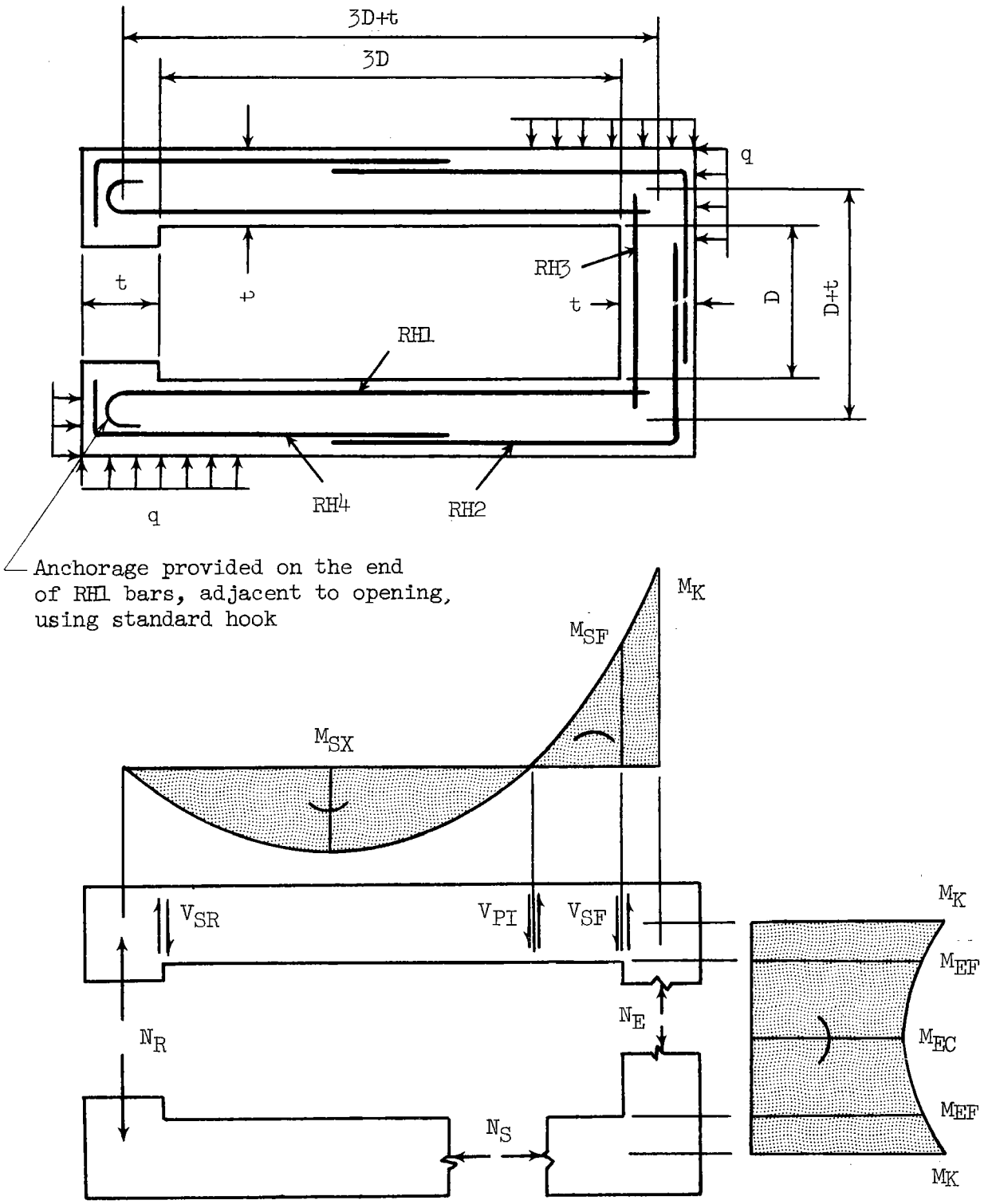

Figure 1. Definition sketch - low stage inlet opening in one endwall.

Coefficients for the forces, shears, and moments shown in Figure 1 are given in Table 1. They are based on the assumption of non-prismatic members as explained in Technical Release No. 30.

Table 1. Coefficients for frame analysis.

t/D	0.00	0.25	0.50	0.75	1.00
M_K/qD^2	0.78	1.02	1.30	1.61	1.94
M_{SF}/qD^2	0.78	0.79	0.80	0.81	0.82
M_{SX}/qD^2	0.77	0.86	0.95	1.05	1.15
M_{EF}/qD^2	0.78	0.95	1.14	1.35	1.56
M_{EC}/qD^2	0.66	0.83	1.02	1.23	1.44
V_{PI}/qD	1.24	1.31	1.38	1.45	1.52
V_{SF}/qD	1.76	1.81	1.87	1.93	1.99
N_S/qD	0.50	0.75	1.00	1.25	1.50
N_E/qD	1.76	2.06	2.37	2.68	2.99
N_R/qD	1.24	1.44	1.63	1.82	2.01

(D in qD and qD^2 is in ft.)

Using the coefficients from Table 1, the various analyses may be performed as follows:

(a) The minimum wall thickness, t, determined by shear stress in the sidewall at a distance d from the face of the endwall, is computed from

$$v = \frac{V_{SF} - q(d/12)}{bd}$$

or

$$d = \frac{V_{SF}}{vb + q/12}$$

and

$$t = d + 2.5$$

where:

v = allowable shear stress = 70 psi
b = 12 inches
d = effective depth, inches
t = inches

Or alternately, d and thus t may be obtained from ES-164, sheet 2 of 3 contained in NEH Section 6.

(b) The required perimeter of the positive steel, RH1, is determined by bond stress in the sidewall at the point of contraflexure. Thus

$$\Sigma o = \frac{V_{PI}}{u(7/8)d}$$

where

u = allowable bond stress for tension top bars, psi

Σo = in/ft

Or alternately, Σo may be obtained from ES-164, sheet 3 of 3.

(c) The required area, A_s, of the positive steel, RH1, may be computed from M_{SX} and N_S using ES-164, sheet 1 of 3.

(d) The required perimeter of the negative steel, RH2, is determined by bond stress in the sidewall at the face of the endwall. Thus

$$\Sigma o = \frac{V_{SF}}{u(7/8)d}$$

Or, Σo may be obtained from ES-164, sheet 3 of 3.

(e) The required area of the negative steel, RH2, may be governed by M_{SF} and N_S or by M_{EF} and N_E. The area may be obtained from ES-164, sheet 1 of 3.

(f) Bars RH3 and RH4 should not be less than required by temperature and shrinkage (T&S).

Openings in Both Endwalls

It is assumed that the uniformly distributed wall load is resisted entirely by horizontal simple beam action. The simple beam reactions are carried by vertical beam action into the adjacent closed sections.

The forces, shears, and moments of interest and the suggested horizontal steel layout are shown in Figure 2 where:

M_{SC} = moment in sidewall at center of sidewall, ft kips/ft

Other quantities as previously defined.

Coefficients for the forces, shears, and moments shown in Figure 2 are given in Table 2. N_S is computed on the assumption the width of the opening is 3/4 D.

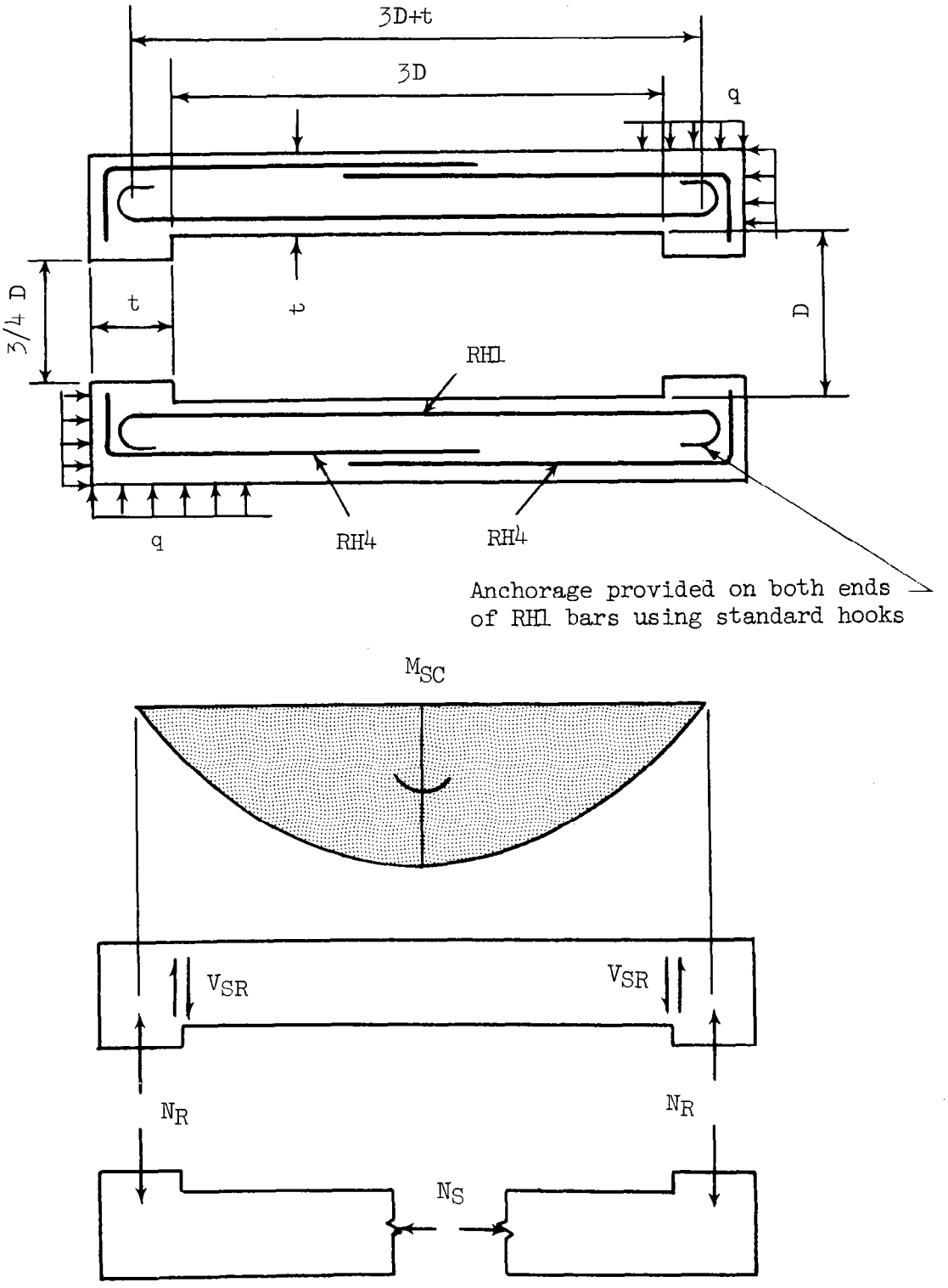

Figure 2. Definition sketch - low stage inlet opening in both endwalls.

Table 2. Coefficients for simple beam analysis.

t/D	0.00	0.25	0.50	0.75	1.00
M_{SC}/qD^2	1.12	1.32	1.53	1.76	2.00
V_{SR}/qD	1.50	1.50	1.50	1.50	1.50
N_S/qD	0.12	0.37	0.62	0.87	1.12
N_R/qD	1.50	1.75	2.00	2.25	2.50

(D in qD and qD^2 is in ft.)

Using the coefficients from Table 2, the various analyses may be performed as follows:

(a) The minimum wall thickness, t, determined by shear stress in the sidewall at a distance d from the face of the reaction beam, is computed from

$$v = \frac{V_{SR} - q(d/12)}{bd}$$

or

$$d = \frac{V_{SR}}{vb + q/12}$$

and

$$t = d + 2.5$$

Or, d and thus t may be obtained from ES-164, sheet 2 of 3.

(b) The required perimeter of the positive steel, RH1, is determined by bond stress in the sidewall at the face of the reaction beam. Thus

$$\Sigma o = \frac{V_{SR}}{u(7/8)d}$$

Or, Σo may be obtained from ES-164, sheet 3 of 3.

(c) The required area of the positive steel, RH1, may be computed from M_{SC} and N_S using ES-164, sheet 1 of 3.

(d) Bars RH4 should not be less than required by T&S.

Vertical Reaction Beams

The vertical reaction beams carry the reactions N_R, as uniform loading, into the adjacent closed sections of the riser.
See Figure 3 where:

e = span of reaction beam, maximum of approximately 2D, ft
t = width of reaction beam, inches
y = thickness of reaction beam, inches
N_R = reaction beam loading, kips/ft
V_{RF} = shear in reaction beam at face of support, kips
M_{RF} = moment in reaction beam at face of support, ft kips
M_{RC} = moment at center of reaction beam (not shown) ft kips

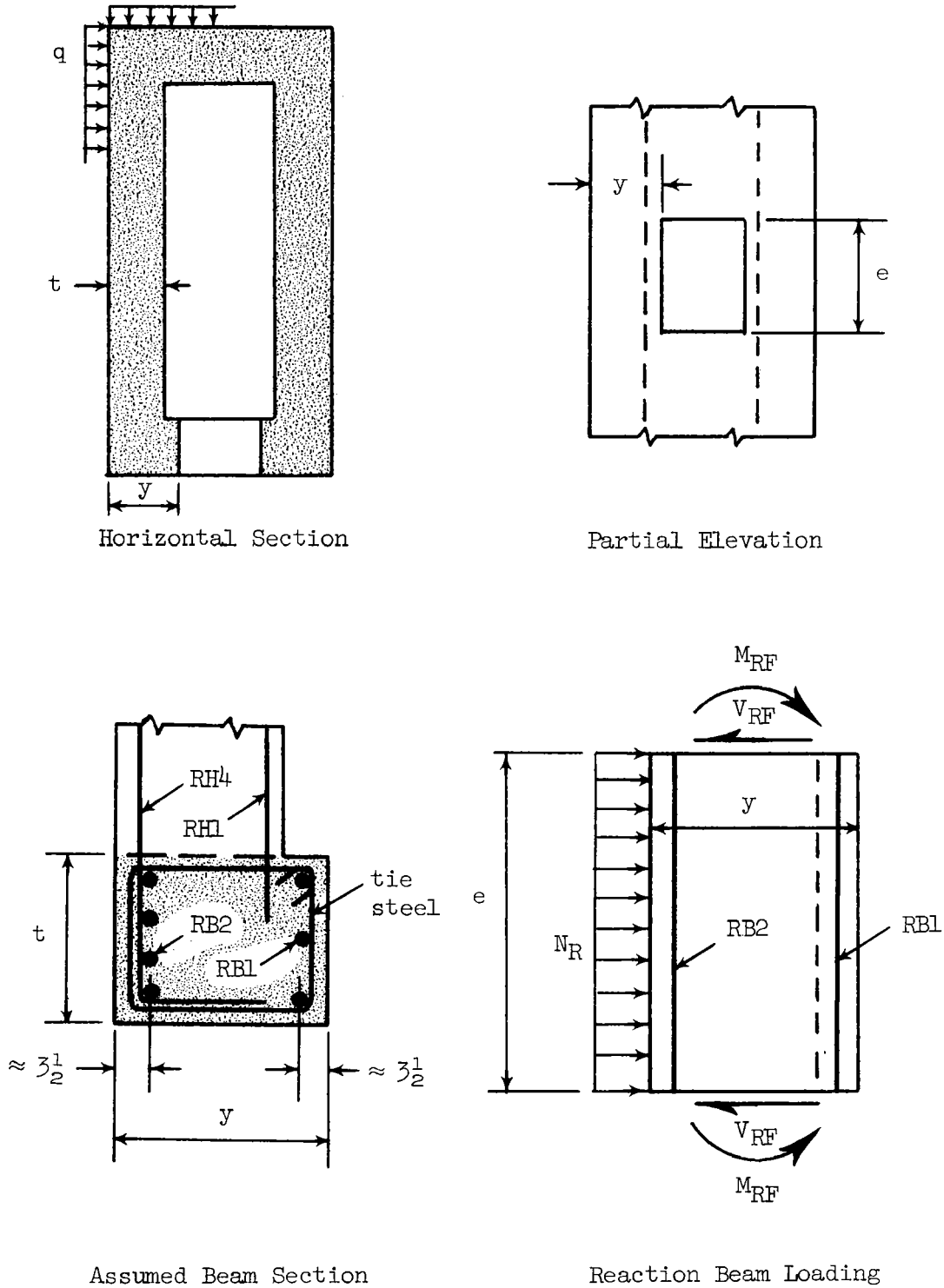

Figure 3. Definition sketches - vertical reaction beams.

Considering Figure 3, the various analyses may be performed as follows:

(a) Flexural shear probably will not be critical because of the relatively short span and large effective depth. When applicable, flexural shear should be checked using

$$v = \frac{V_{RF} - N_R(d/12)}{td}$$

where

$V_{RF} = N_R(e/2)$

d = effective depth, inches.

(b) The required perimeter of the negative steel, RB2, is determined by bond stress at the face of the opening. Thus

$$\Sigma o = \frac{V_{RF}}{u(7/8)d}$$

where:

u = allowable bond stress for tension bars other than top bars, psi

(c) The required area of the negative steel, RB2, may be computed from M_{RF} using ES-164, sheet 1 of 3. M_{RF} may be taken as

$$M_{RF} = \frac{N_R e^2}{12}$$

(d) The required perimeter of the positive steel, RB1, depends on the locations of the points of contraflexure in the reaction beam. The required perimeter may be taken equal to that required for the negative steel.

(e) The required area of the positive steel, RB1, may be computed from M_{RC} using ES-164, sheet 1 of 3. M_{RC} may be taken as

$$M_{RC} = \frac{N_R e^2}{16}$$

(f) The bars RB1 and RB2 may be provided, at least in part, by the usual vertical steel for T&S. These vertical reaction beams are really "edge" or "spandrel" beams. They are subjected to an indeterminate amount of torsion. Therefore, as a minimum, at least one vertical bar should be placed in each corner of the vertical reaction beam section. These bars should be enclosed in column type ties not less than #3 at 12"cc.

In some cases, due to either shear or moment, it may be necessary to increase the sectional area of the vertical reaction beam. If this is done, it will require suitable modifications in the foregoing analyses.

Figure 4 shows the suggested steel layout in the region of the low stage inlet opening. The usual vertical steel for T&S in the sidewalls and endwalls should be continued without interruption where possible. This steel furnishes a secondary means of carrying the riser wall loads to the adjacent closed sections; it also provides for a smooth transition from one-way to two-way behavior.

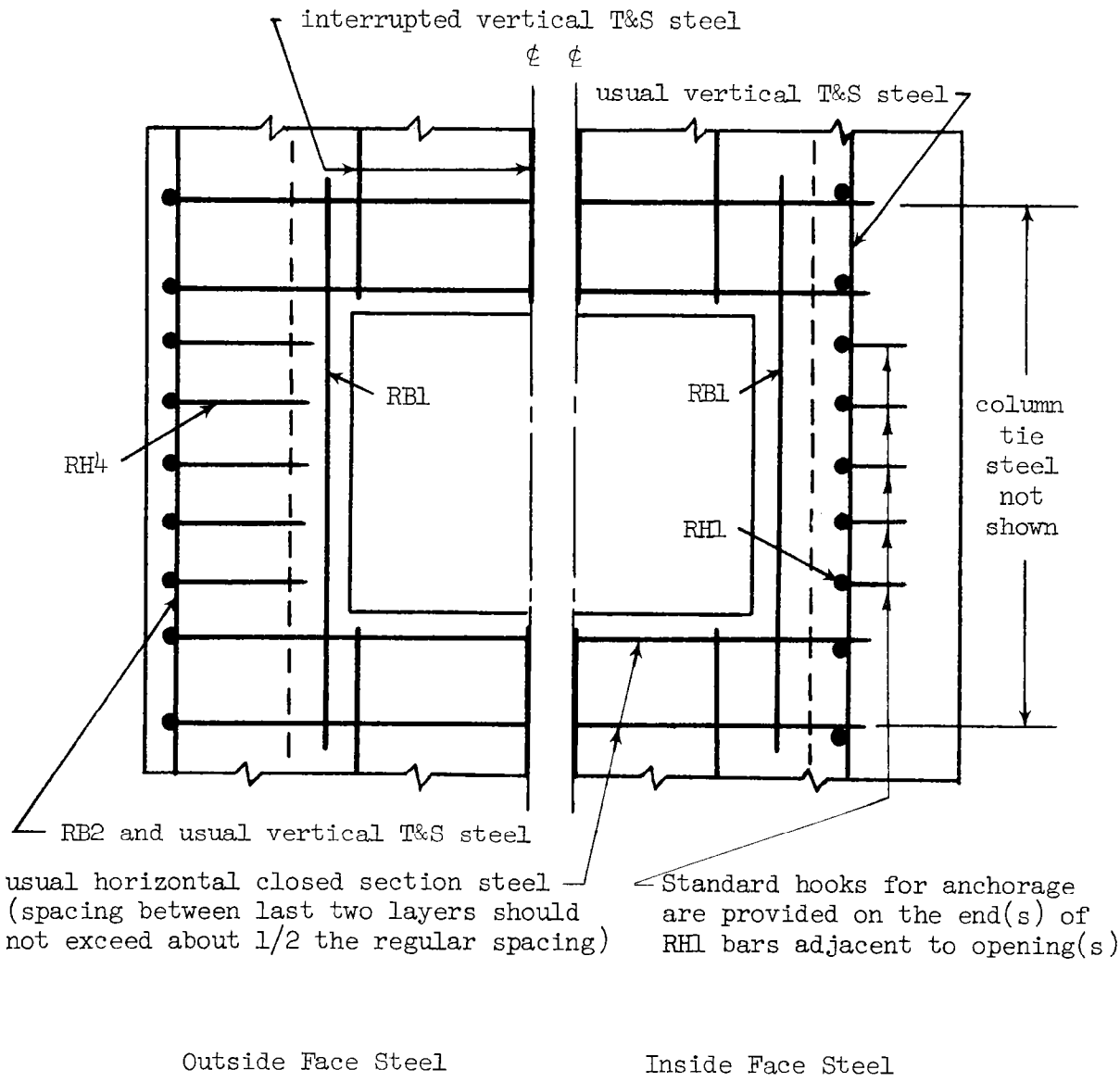

Figure 4. Partial elevation showing schematic steel layout at low stage inlet opening.

USDA-SCS-HYATTSVILLE, MD. 1969