United States Department of Agriculture
Soil Conservation Service
Engineering Division

Technical Release No. 3
Design Section
June 27, 1956

HOOD INLETS for CULVERT SPILLWAYS[1]

History of Development. Bulletin No. 35 of the Engineering Experiment Station of Oregon State College dated June 1954 by Malcolm H. Karr and Leslie A. Clayton entitled "Model Studies of Inlet Designs for Pipe Culverts on Steep Grades" first presented the concept of what we have chosen to call the "hood inlet." This research established the fact that a culvert can be made to flow full even though the slope of the culvert is greater than neutral slope (see National Engineering Handbook, Section 5, Hydraulics, page 5.5-3) if the inlet is properly proportioned. The maximum culvert slope tested was 8 percent. The tests were conducted on a plexiglas pipe having an internal diameter of 4 in. and a length of 82 in. No anti-vortex device was provided.

This report was brought to the attention of the Design Section by Fred W. Blaisdell, Project Supervisor, ARS, at the St. Anthony Falls Hydraulic Laboratory of the University of Minnesota, who recognized a potential use for such a spillway in Service operations. The report was carefully studied in the Design Section and copies were purchased and distributed to the Engineering and Watershed Planning Units and the State Conservation Engineers. Soon it was generally agreed that a spillway of this type would have considerable use in the Service program.

However, several questions regarding the hydraulic design of the hood inlet and the need for an anti-vortex device to be used in association with it were raised by Blaisdell, M. M. Culp, and P. D. Doubt. It seemed wise to extend the work of Karr and Clayton by additional research under Blaisdell's direction.

Blaisdell and C. A. Donnelly have arrived at tentative results that justify publication in this technical release. Their studies continue.

The work at St. Anthony Falls Hydraulic Laboratory verified the general findings of Karr and Clayton, pointed out the necessity for anti-vortex devices to stabilize flow conditions and to insure full-pipe flow, and demonstrated the need for a longer hood and for providing protection against scour of the embankment in the vicinity of the inlet. The tentative findings of Blaisdell and Donnelly are presented in the following discussion on proportions of the hood inlet and scour protection requirements. They are applicable for pipe slopes not in excess of 36 percent, the limit of present tests.

---

[1]This technical release was written by M. M. Culp, Head, Design Section, with assistance from A. R. Gregory and H. J. Goon.

Proportions of Inlet and Anti-vortex Device. The presently recommended minimum proportions of the hood inlet and anti-vortex device are given in Fig. 1.

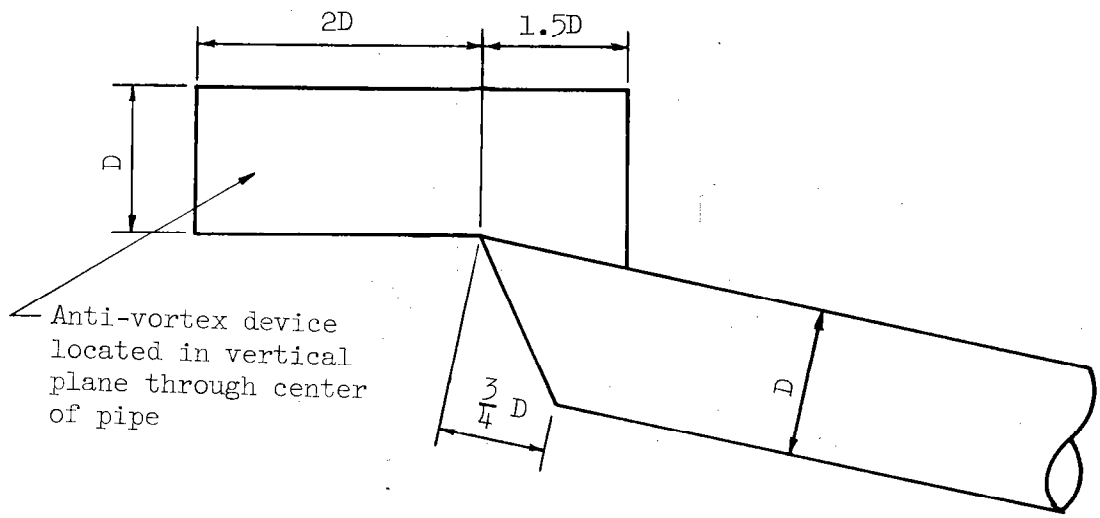

FIGURE 1

Model studies show that it is not necessary for the anti-vortex device to extend below the crown of the pipe to accomplish its hydraulic function. For pipes of significant size, however, it will probably be necessary or desirable to provide additional structural support for the anti-vortex device by extending it downward in front of the pipe into the paving provided for scour protection. Although no test data are available on the effect of thickness of the anti-vortex device on discharge capacity when it is extended downward in front of the pipe opening, it is believed that the ratio of the thickness of the anti-vortex device to the internal diameter of the pipe D should not exceed about 0.2.

Scour Near the Inlet and Protection Required. Under full-pipe flow conditions high velocities exist near the pipe entrance. Under certain conditions these velocities are great enough to move rock riprap having a mean diameter greater than the diameter of the pipe. In ordinary soils or sands without protection by paving or riprap, a scour hole is developed. According to Blaisdell, the scour hole radius, scour hole depth, and the size of grain for imminent movement are given by the following equations.

$$\frac{R}{D} = \left(0.15 + 0.04\,\frac{Q}{D^{5/2}}\right)\left(\frac{D}{d}\right)^{1/5} \quad \text{- - - - - - - -} \quad (1)$$

$$\frac{S}{D} = \frac{1}{20}\,\frac{Q}{D^{5/2}} - \frac{d}{D} - 0.075 \quad \text{- - - - - - - - -} \quad (2)$$

$$\frac{d}{D} = \frac{1}{20}\,\frac{Q}{D^{5/2}} - 0.075 \quad \text{- - - - - - - - - -} \quad (3)$$

where R = radius of scour hole in cohesionless material, ft
D = diameter of pipe, ft
Q = discharge, cfs
d = mean grain size of cohesionless material, ft
S = depth of scour hole in cohesionless material, ft

The question arises as to the values of d to be used in Eq. 1, 2, and 3. It should be noted that Eq. 3 is derived directly from Eq. 2 by setting the ratio $S \div D$ equal to zero in Eq. 2. Tractive force equations for bed movement of particles in open channel flow are generally reliable for particles down to a size of about 0.5 mm. (1 mm = 0.003281 ft = 0.03937 in.) Blaisdell developed the equations given above from tests on a pipe having an inside diameter of 2.25 in. and with sands or gravels of nearly uniform size. The mean diameters of the particles in different lots ranged from 0.006 in. to 2 in. Thus, the range in $d \div D$ actually tested was from 0.0026 to 0.89.

Many, if not most, of the soils used in the construction of farm ponds and other upstream dams have mean diameters considerably less than 0.5 mm. Hence, there is some question as to the direct application of these equations for computing the size and depth of the scour hole that might be developed. The equations do not account for the effects of cohesion nor of the vegetative cover that might develop around the hood inlet, which would tend to reduce the size of the scour hole.

It seems reasonable to assume, on a trial basis, subject to field observation and check, that the radius and depth of the scour hole that would develop without riprap or paving could be computed within acceptable limits of accuracy by assuming $d = 0.5$ mm = 0.00164 ft.

Hydraulic Design. The addition of a hood and an adequate anti-vortex device to the inlet of a culvert on a steep (above neutral) slope will make the culvert flow full under total available head when the water surface above the inlet reaches an elevation above the invert of the culvert at its inlet end as given by Eq. 8. The total available head will equal the difference in elevation between the center line of the culvert at its outlet end or the elevation of the tailwater, whichever is the highest, and the elevation of the water surface above the culvert.

Under full-flow conditions the discharge through the culvert spillway can be computed from the following equations:

$$H = \frac{v_p^2}{2g} (1 + K_e + K_m + K_p L) \quad \text{- - - - - - - - -} \quad (4)$$

$$Q = a v_p \quad \text{- - - - - - - - - - - - - - -} \quad (5)$$

where H = total available head, ft
v_p = mean velocity in the culvert, fps
g = acceleration of gravity = 32.16 ft/sec^2
K_e = entrance loss coefficient
K_m = miter-bend loss coefficient

K_p = pipe-friction loss coefficient
Q = discharge, cfs
a = cross-sectional area of culvert, ft^2
L = length of conduit, ft

Equations 4 and 5 can be combined to give

$$Q = a\sqrt{\frac{2g\,H}{1 + K_e + K_m + K_pL}} \quad - - - - - - \quad (6)$$

Available data indicate that for design purposes K_e should be taken as equal to 1.

The miter-bend loss, if involved, can be computed with sufficient accuracy from the equation

$$K_m = \frac{n\alpha}{3} \quad - - - - - - - - - \quad (7)$$

where n = Manning's roughness coefficient for the pipe
α = the deflection angle in the pipe, degrees; when ($\alpha \leq 30^\circ$)

Values of K_p can be read for ordinary pipe sizes and materials from drawing ES-42.

A general description of flow conditions in the spillway should be helpful in understanding the procedure involved in computing a stage-discharge curve should it be necessary.

Weir flow controls the discharge of a steep culvert as the upstream stage rises above the invert of the inlet. Weir flow continues to control the discharge until the $h \div D$ ratio reaches approximately 1.1, where h is the difference in elevation between the inlet invert and the upstream water surface. At an $h \div D$ ratio of about 1.1, the culvert starts to prime and occasional slugs form and pass away from the inlet. As the head continues to rise, slugs of full-pipe cross section form more frequently, and then the pipe starts to flow full of a mixture of air and water. When the $h \div D$ ratio becomes large enough, the pipe will be completely primed and flowing full of water under total head. The entire transition from weir to full-pipe flow is smooth and positive if an adequate anti-vortex device and hood have been provided.

The weir-flow portion of the stage-discharge curve may be computed with acceptable accuracy from data published by Prof. F. T. Mavis in Bulletin No. 56 of the Pennsylvania State College Engineering Experiment Station entitled "The Hydraulics of Culverts." The following table has been prepared from Fig. 23 of this bulletin.

$h \div D$	0	0.2	0.4	0.6	0.8	1.0	1.1	1.2
$Q \div D^{5/2}$	0	0.16	0.46	0.88	1.56	2.20	2.50	2.80

TABLE 1

HOOD INLETS : Q vs. $\frac{Q}{D^{5/2}}$

Q = discharge in cfs
D = diameter of pipe in ft

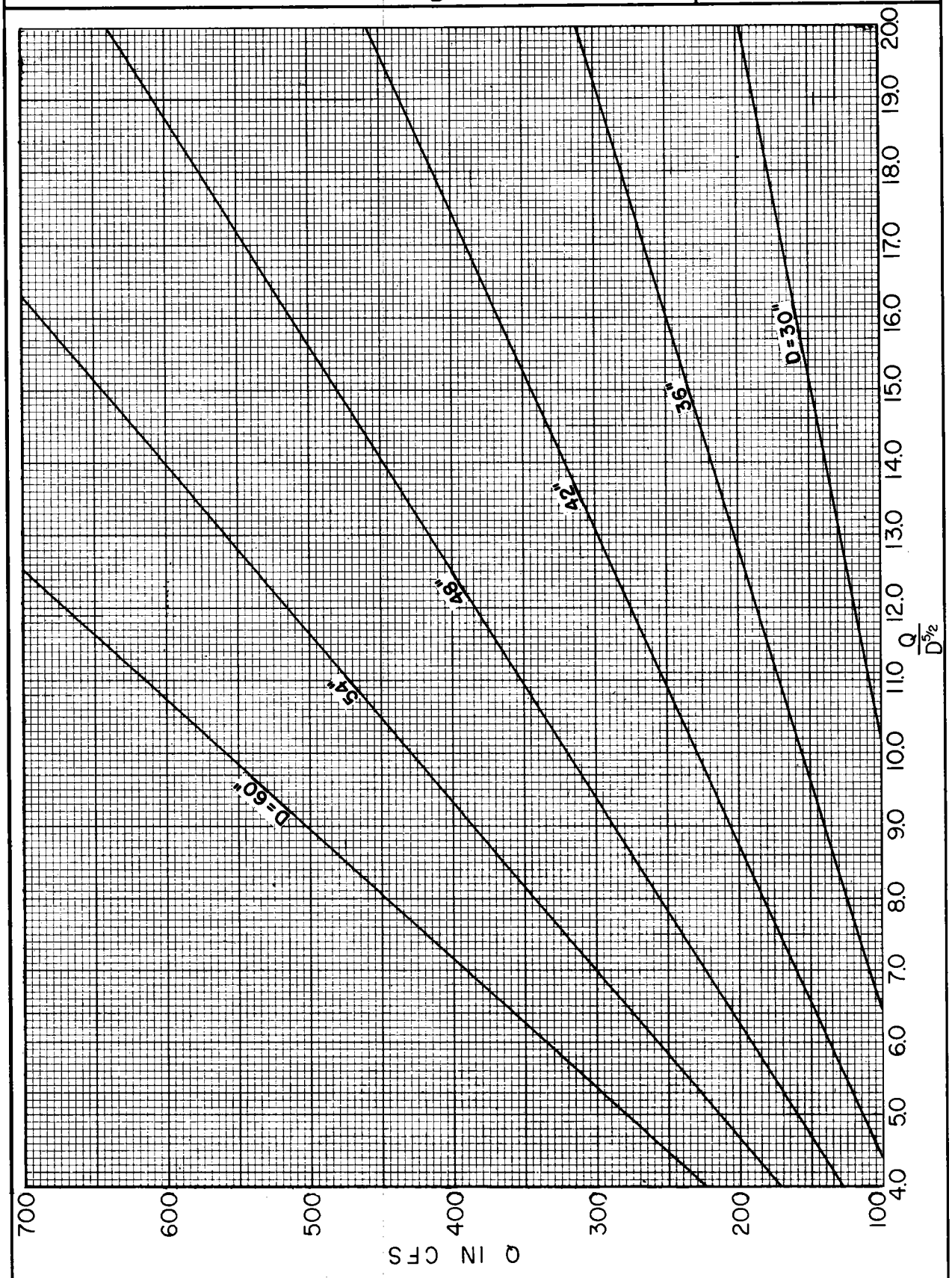

REFERENCE

U. S. DEPARTMENT OF AGRICULTURE
SOIL CONSERVATION SERVICE
ENGINEERING DIVISION - DESIGN SECTION

STANDARD DWG. NO.
ES- 108
SHEET 1 OF 3
DATE 5-4-56

HOOD INLETS : Q vs. $\frac{Q}{D^{5/2}}$

Q = discharge in cfs
D = diameter of pipe in ft

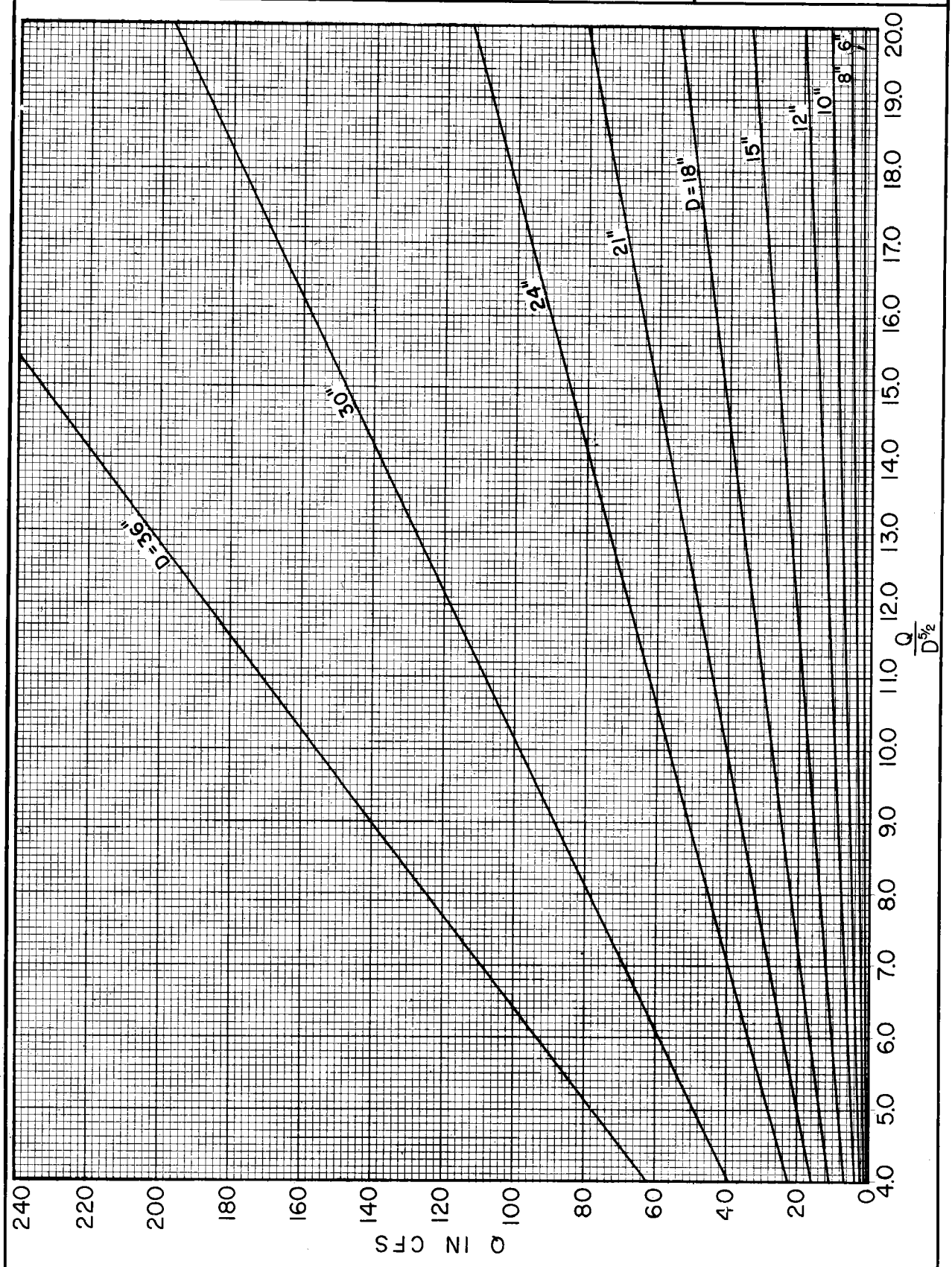

REFERENCE

U. S. DEPARTMENT OF AGRICULTURE
SOIL CONSERVATION SERVICE
ENGINEERING DIVISION - DESIGN SECTION

STANDARD DWG. NO.
ES- 108
SHEET 2 OF 3
DATE 5-4-56

HOOD INLETS : Q vs. $\frac{Q}{D^{5/2}}$

Q = discharge in cfs
D = diameter of pipe in ft

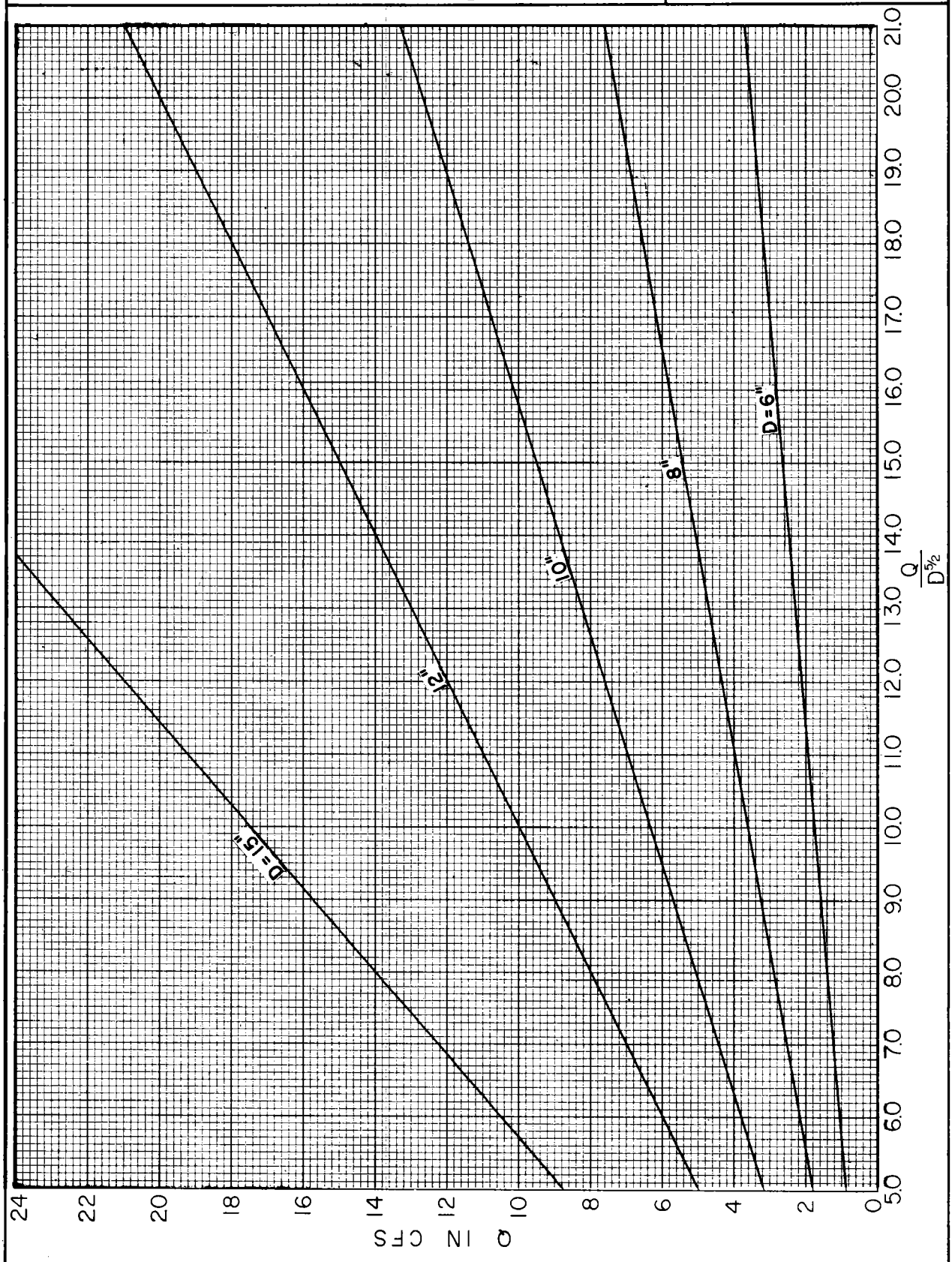

REFERENCE

U. S. DEPARTMENT OF AGRICULTURE
SOIL CONSERVATION SERVICE
ENGINEERING DIVISION - DESIGN SECTION

STANDARD DWG. NO.
ES- 108
SHEET 3 OF 3
DATE 5-4-56

HOOD INLETS : $\frac{d}{D}$ vs. $\frac{Q}{D^{5/2}}$

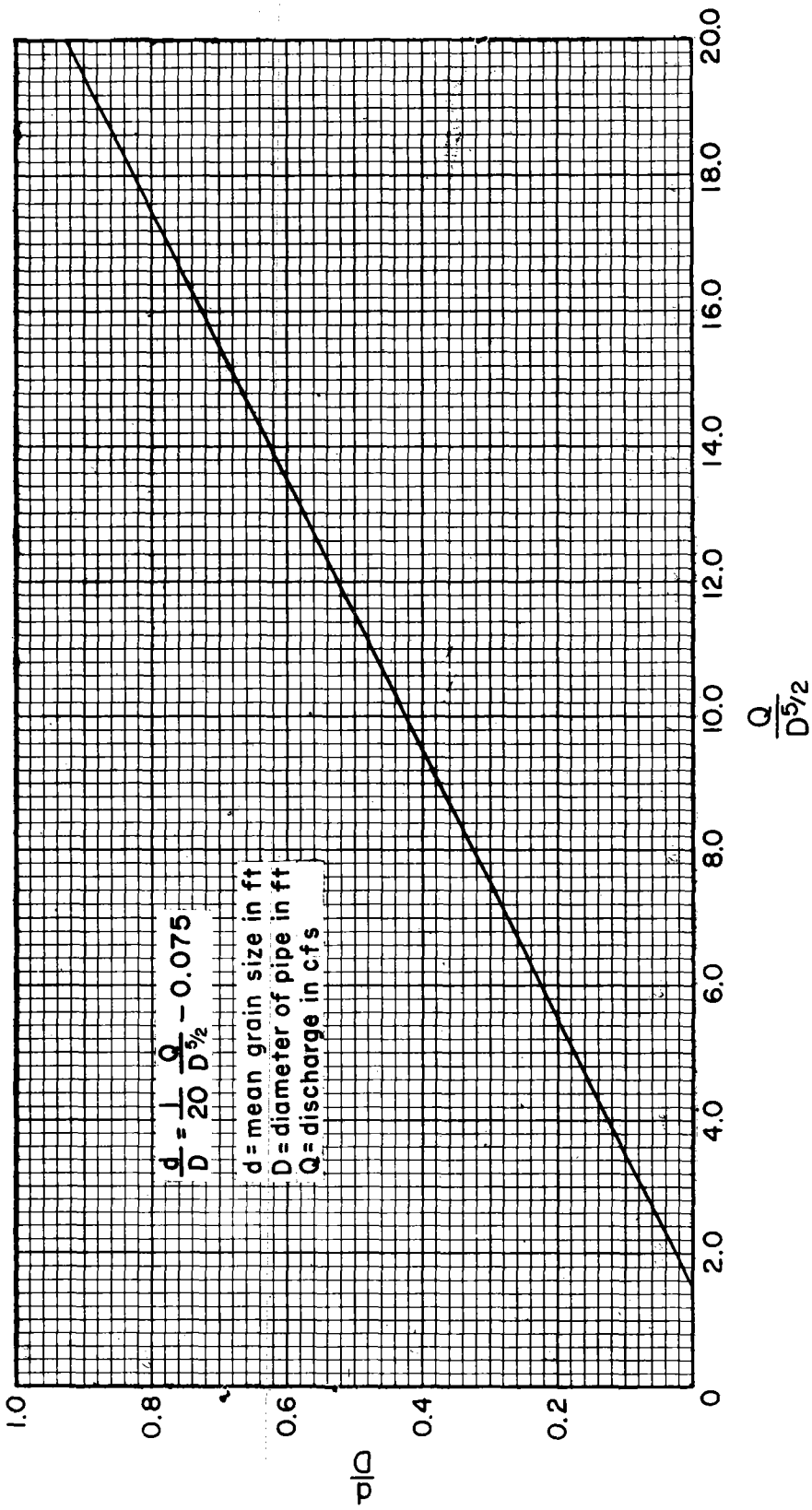

REFERENCE	U. S. DEPARTMENT OF AGRICULTURE SOIL CONSERVATION SERVICE ENGINEERING DIVISION - DESIGN SECTION	STANDARD DWG. NO. ES-109 SHEET 1 OF 3 DATE 5-4-56

HOOD INLETS : $\frac{R}{D}$ vs. $\frac{Q}{D^{5/2}}$

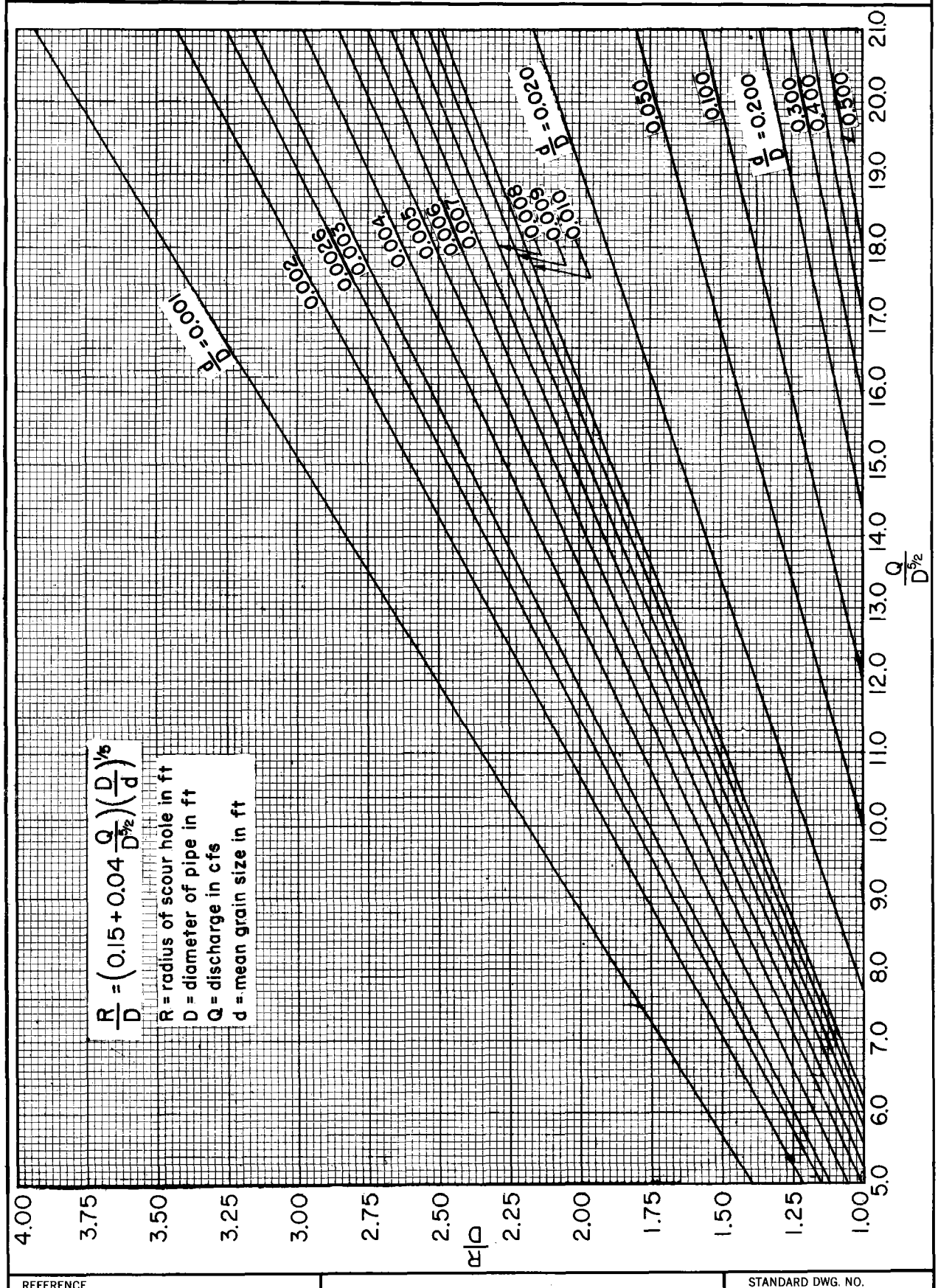

REFERENCE	U. S. DEPARTMENT OF AGRICULTURE SOIL CONSERVATION SERVICE ENGINEERING DIVISION - DESIGN SECTION	STANDARD DWG. NO. ES- 109 SHEET 2 OF 3 DATE 5 - 4 - 56

HOOD INLETS : $\frac{S}{D}$ vs. $\frac{Q}{D^{5/2}}$

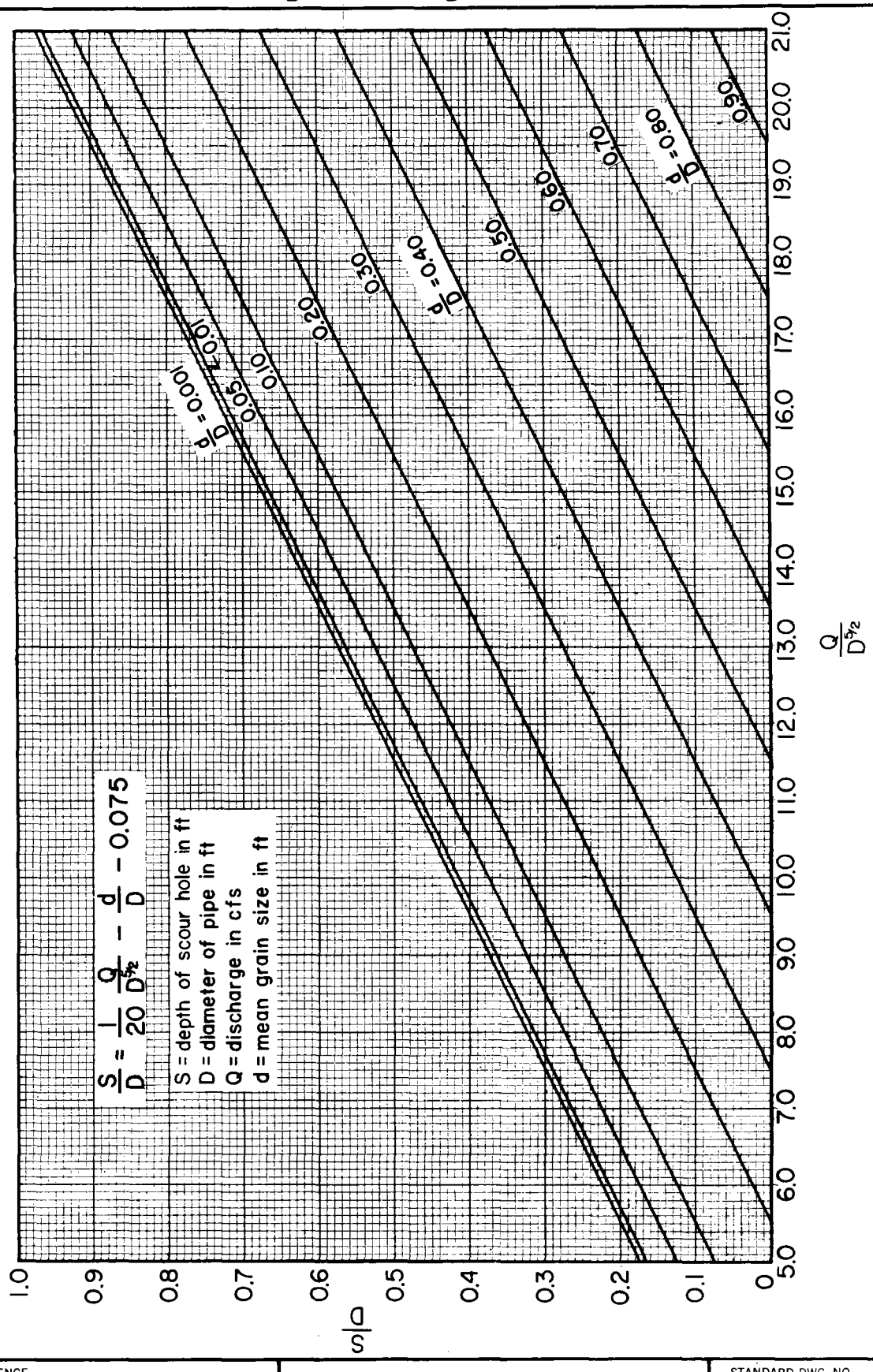

REFERENCE	U. S. DEPARTMENT OF AGRICULTURE SOIL CONSERVATION SERVICE ENGINEERING DIVISION - DESIGN SECTION	STANDARD DWG. NO. ES- 109 SHEET 3 OF 3 DATE 5-4-56

ELEVATION vs. PROBABLE MINIMUM ATMOSPHERIC PRESSURES
TEMPERATURE vs. VAPOR PRESSURE OF WATER

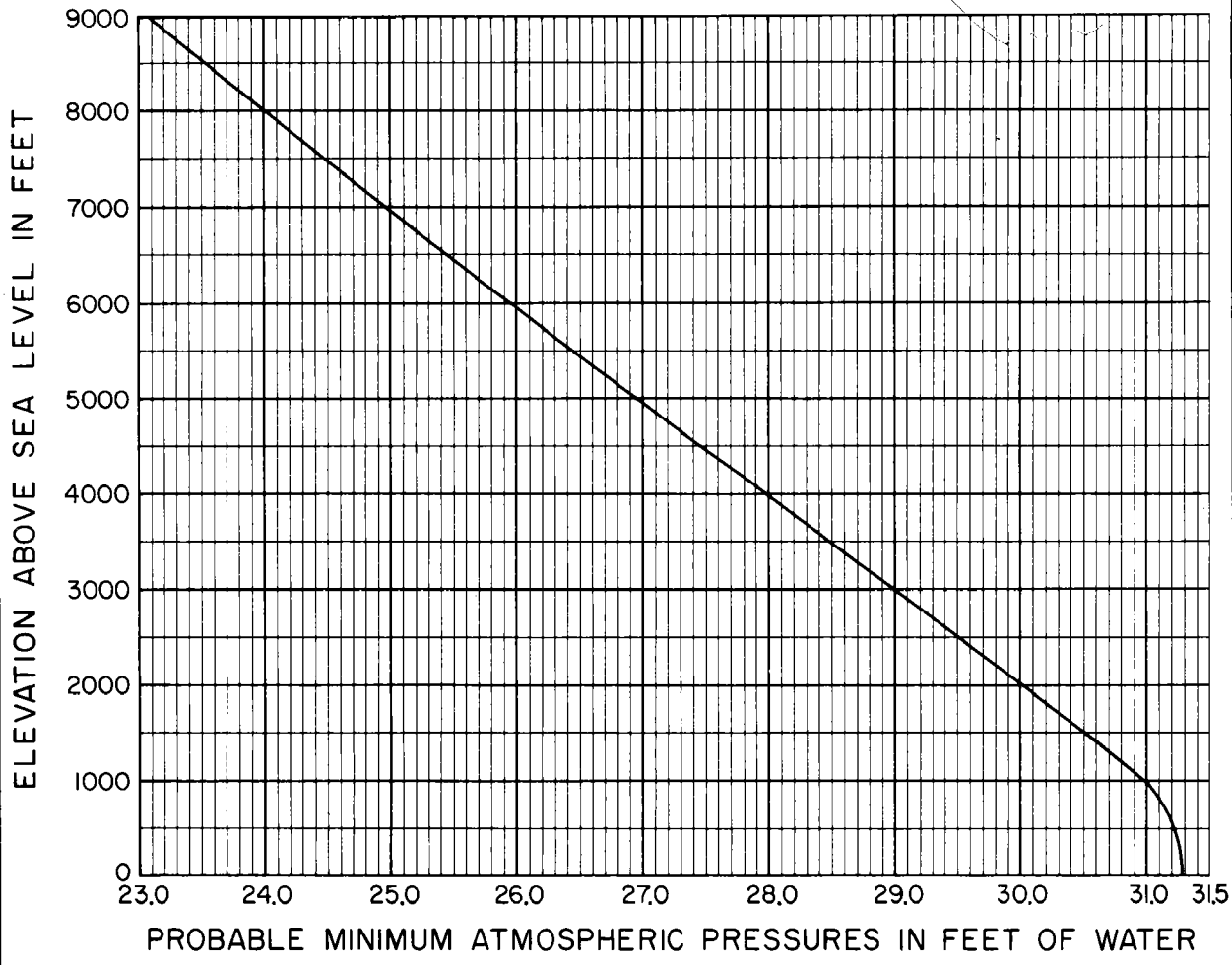

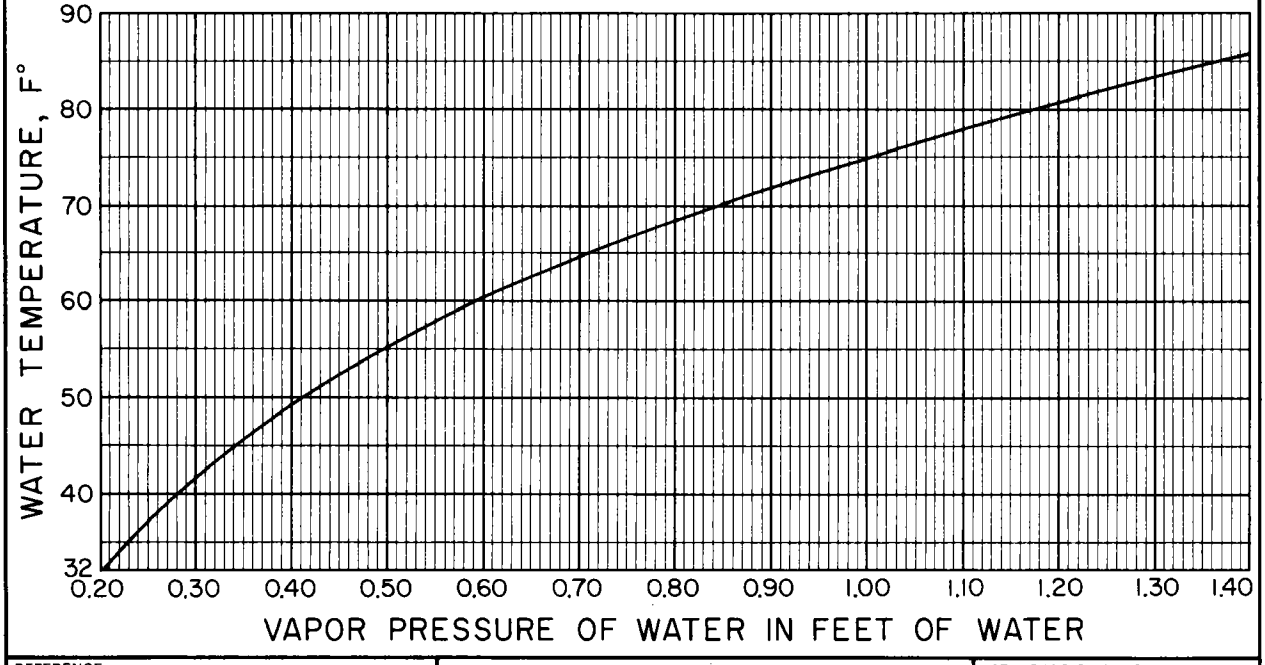

REFERENCE	U. S. DEPARTMENT OF AGRICULTURE SOIL CONSERVATION SERVICE ENGINEERING DIVISION - DESIGN SECTION	STANDARD DWG. NO. ES- 110 SHEET 1 OF 1 DATE 6-27-56

HYDRAULICS: HEAD LOSS COEFFICIENTS FOR CIRCULAR AND SQUARE CONDUITS FLOWING FULL

HEAD LOSS COEFFICIENT, K_p, FOR CIRCULAR PIPE FLOWING FULL $\quad K_p = \frac{5087\,n^2}{d_i^{4/3}}$

Pipe diam. inches	Flow area sq. ft.	MANNING'S COEFFICIENT OF ROUGHNESS "n"															
		0.010	0.011	0.012	0.013	0.014	0.015	0.016	0.017	0.018	0.019	0.020	0.021	0.022	0.023	0.024	0.025
6	0.196	0.0467	0.0565	0.0672	0.0789	0.0914	0.1050	0.1194	0.1348	0.151	0.168	0.187	0.206	0.226	0.247	0.269	0.292
8	0.349	.0318	.0385	.0458	.0537	.0623	.0715	.0814	.0919	.1030	.1148	.1272	.140	.154	.168	.183	.199
10	0.545	.0236	.0286	.0340	.0399	.0463	.0531	.0604	.0682	.0765	.0852	.0944	.1041	.1143	.1249	.136	.148
12	0.785	.0185	.0224	.0267	.0313	.0363	.0417	.0474	.0535	.0600	.0668	.0741	.0817	.0896	.0980	.1067	.1157
14	1.069	.0151	.0182	.0217	.0255	.0295	.0339	.0386	.0436	.0488	.0544	.0603	.0665	.0730	.0798	.0868	.0942
15	1.23	.0138	.0166	.0198	.0232	.0270	.0309	.0352	.0397	.0446	.0496	.0550	.0606	.0666	.0727	.0792	.0859
16	1.40	.0126	.0153	.0182	.0213	.0247	.0284	.0323	.0365	.0409	.0455	.0505	.0556	.0611	.0667	.0727	.0789
18	1.77	.01078	.0130	.0155	.0182	.0211	.0243	.0276	.0312	.0349	.0389	.0431	.0476	.0522	.0570	.0621	.0674
21	2.41	.00878	.01062	.0126	.0148	.0172	.0198	.0225	.0254	.0284	.0317	.0351	.0387	.0425	.0464	.0506	.0549
24	3.14	.00735	.00889	.01058	.0124	.0144	.0165	.0188	.0212	.0238	.0265	.0294	.0324	.0356	.0389	.0423	.0459
27	3.98	.00628	.00760	.00904	.01061	.0123	.0141	.0161	.0181	.0203	.0227	.0251	.0277	.0304	.0332	.0362	.0393
30	4.91	.00546	.00660	.00786	.00922	.01070	.01228	.0140	.0158	.0177	.0197	.0218	.0241	.0264	.0289	.0314	.0341
36	7.07	.00428	.00518	.00616	.00723	.00839	.00963	.01096	.0124	.0139	.0154	.0171	.0189	.0207	.0226	.0246	.0267
42	9.62	.00348	.00422	.00502	.00589	.00683	.00784	.00892	.01007	.01129	.0126	.0139	.0154	.0169	.0184	.0201	.0218
48	12.57	.00292	.00353	.00420	.00493	.00572	.00656	.00747	.00843	.00945	.01053	.01166	.0129	.0141	.0154	.0168	.0182
54	15.90	.00249	.00302	.00359	.00421	.00488	.00561	.00638	.00720	.00808	.00900	.00997	.01099	.0121	.0132	.0144	.0156
60	19.63	.00217	.00262	.00312	.00366	.00424	.00487	.00554	.00626	.00702	.00782	.00866	.00955	.01048	.0115	.0125	.0135

HEAD LOSS COEFFICIENT, K_c, FOR SQUARE CONDUIT FLOWING FULL $\quad K_c = \frac{29.16\,n^2}{r^{4/3}}$

Conduit Size feet	Flow area sq. ft.	MANNING'S COEFFICIENT OF ROUGHNESS "n"				
		0.012	0.013	0.014	0.015	0.016
2×2	4.00	0.01058	0.01242	0.01440	0.01653	0.01880
2½×2½	6.25	0.00786	0.00922	0.01070	0.01228	0.01397
3×3	9.00	.00616	.00723	.00839	.00963	.01096
3½×3½	12.25	.00502	.00589	.00683	.00784	.00892
4×4	16.00	.00420	.00493	.00572	.00656	.00746
4½×4½	20.25	.00359	.00421	.00488	.00561	.00638
5×5	25.00	.00312	.00366	.00425	.00487	.00554
5½×5½	30.25	.00275	.00322	.00374	.00429	.00488
6×6	36.00	.00245	.00287	.00333	.00382	.00435
6½×6½	42.25	.00220	.00258	.00299	.00343	.00391
7×7	49.00	.00199	.00234	.00271	.00311	.00354
7½×7½	56.25	.00182	.00213	.00247	.00284	.00323
8×8	64.00	.00167	.00196	.00227	.00260	.00296
8½×8½	72.25	.00154	.00180	.00209	.00240	.00273
9×9	81.00	.00142	.00167	.00194	.00223	.00253
9½×9½	90.25	.00133	.00156	.00180	.00207	.00236
10×10	100.00	.00124	.00145	.00168	.00193	.00220

$$H_l = (K_p \text{ or } K_c)\, L\, \frac{v^2}{2g}$$

Nomenclature:

- a = Cross-sectional area of flow in sq. ft.
- d_i = Inside diameter of pipe in inches.
- g = Acceleration of gravity = 32.2 ft. per sec.
- H_l = Loss of head in feet due to friction in length L.
- K_c = Head loss coefficient for square conduit flowing full.
- K_p = Head loss coefficient for circular pipe flowing full.
- L = Length of conduit in feet.
- n = Manning's coefficient of roughness.
- Q = Discharge or capacity in cu. ft. per sec.
- r = Hydraulic radius in feet.
- v = Mean velocity in ft. per sec.

Example 1: Compute the head loss in 300 ft. of 24 in. diam. concrete pipe flowing full and discharging 30 c.f.s. Assume n = 0.015

$$v = \frac{Q}{a} = \frac{30}{3.14} = 9.55 \text{ f.p.s.}; \quad \frac{v^2}{2g} = \frac{(9.55)^2}{64.4} = 1.42 \text{ ft.}$$

$$H_l = K_p L \frac{v^2}{2g} = 0.0165 \times 300 \times 1.42 = 7.03 \text{ ft.}$$

Example 2: Compute the discharge of a 250 ft., 3×3 square conduit flowing full if the loss of head is determined to be 2.25 ft. Assume n = 0.014.

$$H_l = K_c L \frac{v^2}{2g}; \quad \frac{v^2}{2g} = \frac{H_l}{K_c L} = \frac{2.25}{0.00839 \times 250} = 1.073 \text{ ft.}$$

$$v = \sqrt{64.4 \times 1.073} = 8.31; \quad Q = 9 \times 8.31 = 74.8 \text{ c.f.s.}$$

REFERENCE	U. S. DEPARTMENT OF AGRICULTURE SOIL CONSERVATION SERVICE ENGINEERING STANDARDS UNIT	STANDARD DWG. NO. ES - 42 SHEET 1 OF 1 DATE 7-17-50

Revised 4-11-51

That part of the stage-discharge curve between an h ÷ D ratio of 1.1 and full-pipe flow is given by the following equation:

$$\frac{h}{D} = 1.1 + 0.025\left(\frac{Q}{D^{5/2}} - 2.5\right) \quad \text{- - - - - - - - -} \quad (8)$$

where h = difference in elevation in feet between the crest of the spillway and the water surface in the reservoir

The application of Eq. 8 will be illustrated in examples. Simultaneous solution of Eq. 4 and 8 yields the discharge and stage h at which slug flow changes to full-pipe flow.

Spillways of the culvert type with hood inlets, anti-vortex devices, and barrel slopes in excess of neutral may develop pressures near the upstream end which are less than atmospheric even though a straight section of pipe on nearly flat grade is used at the downstream end as a cantilever outlet.

Because of the shape of the hood inlet, there is a local contraction of the incoming jet away from both the invert and the crown of the pipe at the inlet which results in deviations in the pressure in these localized areas below the average hydraulic grade line. This decrease in pressure may be as great as $0.7(v_p^2 \div 2g)$ at a point on the crown of the pipe just downstream from the lip of the hood; it may be as great as $0.6(v_p^2 \div 2g)$ at a point in the pipe invert just downstream from the crest.

When the absolute pressure approaches the vapor pressure and cavitation is incipient, it is important to know accurately the minimum absolute pressure in the pipe. The absolute pressure in the pipe must be greater than vapor pressure to avoid cavitation. The minimum absolute pressure is given by the following equation.

$$h_{ab} = h_a + h - (1 + K_e + 0.7)\frac{v_p^2}{2g} - D \quad \text{- - - - - - -} \quad (9)$$

where h_{ab} = absolute pressure in feet of water
h_a = atmospheric pressure in feet of water
h = difference in elevation between water surface in the reservoir and the crest of the spillway, ft

Upon substituting $K_e = 1$, Eq. 9 becomes

$$h_{ab} = h_a + h - 2.7\frac{v_p^2}{2g} - D \quad \text{- - - - - - - - - -} \quad (10)$$

From Eq. 4, $(v_p^2 \div 2g) = H \div M$ where $M = (1 + K_e + K_m + K_pL)$. The value of K_p is dependent on the value of Manning's roughness coefficient n; thus, M is dependent on n.

Assuming free outflow from the spillway

$$H = h + Z - \frac{D}{2} \quad - - - - - - - - - - \quad (11)$$

where Z = difference in elevation between the crest of the spillway and its invert at the outlet, ft

Then

$$h_{ab} = h_a + h\left(1 - \frac{2.7}{M}\right) - \frac{2.7}{M}\left(Z - \frac{D}{2}\right) - D \quad - - - \quad (12)$$

For a given location and a given spillway, h_{ab} will be a minimum if h is the least possible value and $(2.7 \div M)$ is less than one thus making $[1 - (2.7 \div M)]$ greater than zero. If the absolute value of $(2.7 \div M)$ is greater than one, then h_{ab} will be a minimum if h has the largest possible value; in this case $[1 - (2.7 \div M)]$ is negative and less than one. For $(2.7 \div M)$ to be greater than one, M must be less than 2.7 and this would represent an unusual situation that might occur with a relatively short barrel and low value of the roughness coefficient.

The absolute pressure decreases as Manning's roughness coefficient decreases. Hence, to find the minimum value of the absolute pressure the lowest probable value of n should be used in the computations.

For hydraulic capacity computations, the maximum probable value of n should be used to give the minimum certain available discharge capacity.

Equation 9, 10, 11, and 12 are based on the assumption of full pipe flow. Simultaneous solution of Eq. 4 and 8 gives the minimum value of h for full-pipe (pressure) flow. Such a solution gives the following quadratic equation.

$$\left(\frac{Q}{D^{5/2}}\right)^2 - \frac{0.992}{M}\left(\frac{Q}{D^{5/2}}\right) - \frac{39.68}{M}\left(0.538 + \frac{Z}{D}\right) = 0 \quad - - \quad (13)$$

To find the value of h at which the pipe starts to flow full, solve Eq. 13 for $(Q \div D^{5/2})$ and substitute this value into Eq. 8. This procedure is illustrated in Problem No. 3.

For pipe materials that do not remain absolutely watertight during and after installation, the permissible negative pressure should be limited to avoid the piping of fine grained or colloidal material from the earth embankment through the leaks in the pipe.

Layout and Design of Hood Inlets, Anti-vortex Devices, and Trash Guards. The layout and design of hood inlets, anti-vortex devices, and trash guards depends on factors such as

1. The durability of the spillway. Materials used in the construction of the anti-vortex device and trash guard should be generally comparable in durability to the material used in the culvert.

2. Construction techniques and know-how available. Farm-pond spillways to be built by farmers or small farm contractors require simpler details and more readily available materials than work done under formal contract by experienced contractors working from detailed plans.

3. Whether or not a scour hole under the pipe inlet is permissible. It is desirable to provide adequate riprap or paving to prevent the formation of a scour hole under the inlet. Paving is better than riprap in that it prevents the growth of vegetation near the inlet, where it is apt to impair the hydraulic efficiency of the entire spillway. In many areas riprap of adequate size will not be readily available. To provide a reasonable factor of safety, the mean size of riprap should be twice the value of d as computed from Eq. 3.

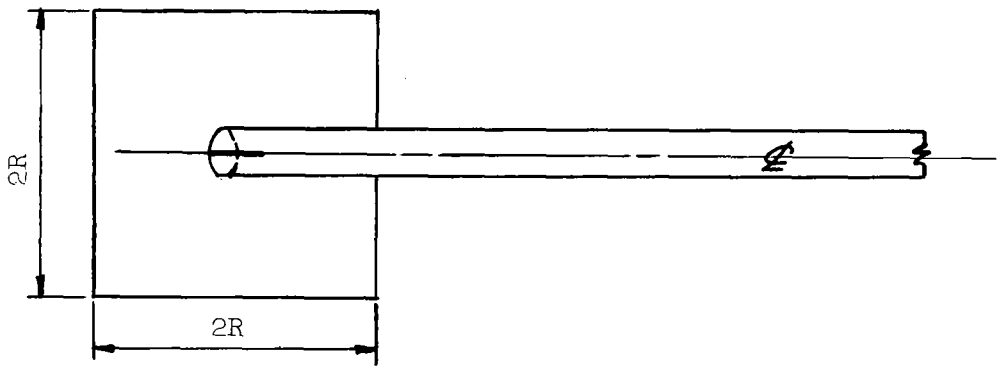

PLAN

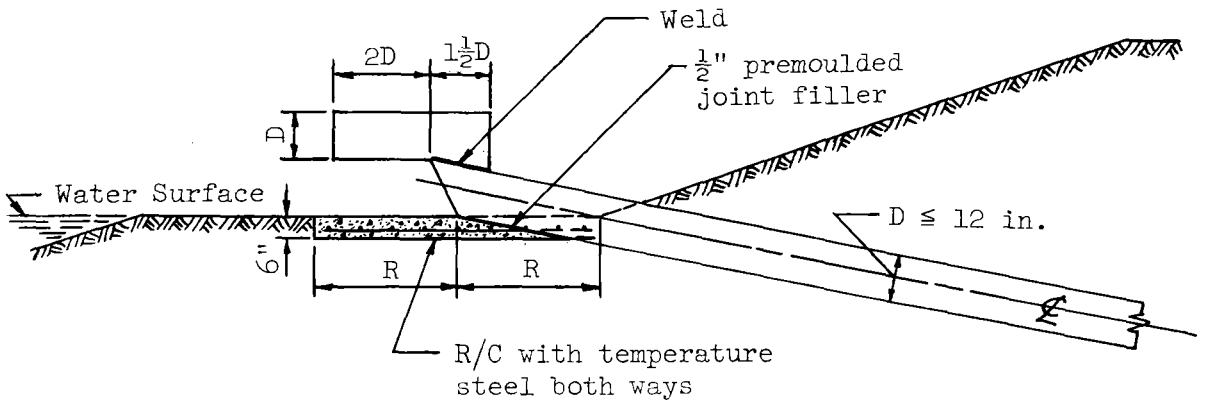

ELEVATION

FIGURE 2

Figures 2 and 3 present typical layouts of inlets for farm-pond spillways having barrel diameters equal to or less than 12 inches. The anti-vortex devices of wrought iron or steel plate are held in position by welding them to the pipe. Protection against scour is provided by a reinforced concrete slab. Trash guards are required but are not shown on the drawing.

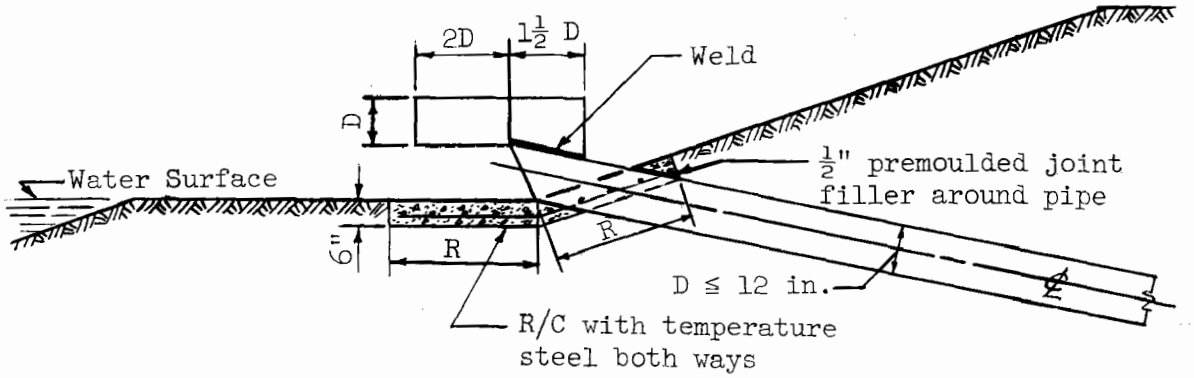

FIGURE 3

For farm-pond installations where adequate riprap or paving is not available or not apt to be installed, suggested layouts are given by Fig. 4 and 5. The method indicated in Fig. 4, in which the culvert pipe is extended into the reservoir, should not be used where more than a thin film of ice might form around the inlet and be continuous with ice on the reservoir water surface.

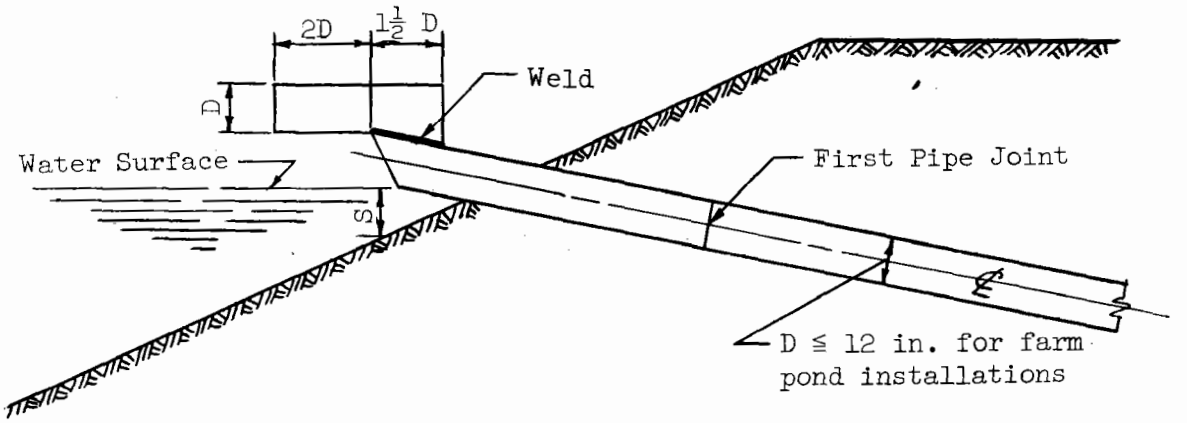

FIGURE 4

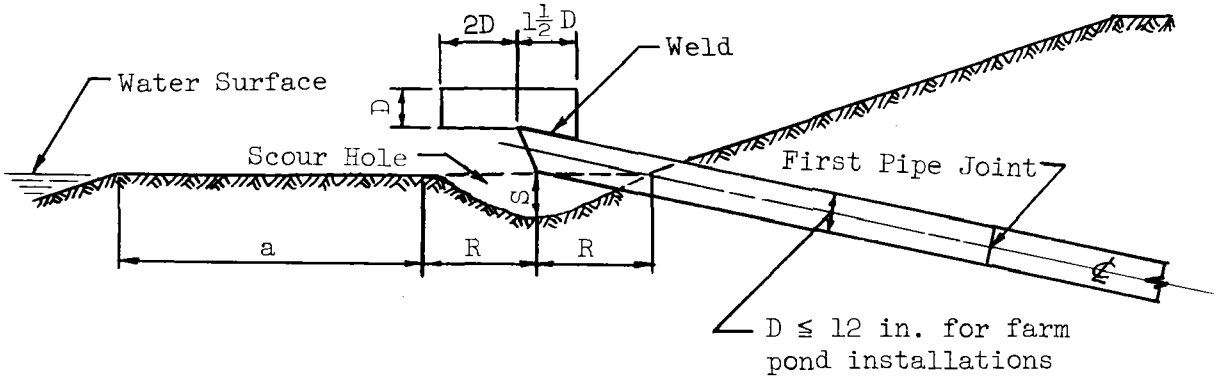

FIGURE 5

4. Culvert material. The method used to support the anti-vortex device will depend on the size of the culvert barrel and whether or not it is made of metal to which the anti-vortex device can be welded. For wrought iron or steel pipes up to 12 in. in diameter, an anti-vortex device of the same material can be welded directly to the top of the pipe. For larger pipes it is better to support the anti-vortex device independently of the pipe. This can be done in several ways. For pipe 24 in. or more in diameter the anti-vortex device can be built of reinforced concrete tied structurally to the paving used as protection against scour.

Care must be taken to insure an adequate approach channel to the inlet of a culvert spillway located in or on the abutment of the dam. Spillways so located are seldom aligned so the vertical plane through the center line of the barrel is perpendicular to the center line of the embankment. In such cases it is almost always necessary to excavate into the abutment of the earth embankment an approach channel to the spillway inlet. This excavation should be large enough to permit water to reach the inlet from all sides under approximately equal head for all stages of the reservoir water surface.

For farm-pond installations a satisfactory trash guard can be built of fence posts and woven wire field fence. Wood posts should be pressure-treated and should have a minimum butt diameter of 5 inches. Steel posts are good if adequately braced. The fence should be well-braced and should extend from the ground to above maximum high water, or the top of the enclosed area should be covered with the fence material. The top, bottom, and filler wires should be No. 9 gauge; 11 is the smallest gauge that should be used. All wire should be galvanized. For farm ponds where the diameter of the spillway is not more than 12 in. and the head under full-pipe flow is less than 15 ft, an adequate trash guard can be built with four posts set in the form of a square with sides of 5 feet. The posts should be set at approximately equal distances from the invert of the hood inlet.

For larger and more permanent installations, trash guards of special design are required and justified. The openings through the trash guard should have a cross-sectional area approximately equal to the cross-sectional area of the spillway barrel, and the horizontal dimension of the opening should be about 1.5 times the vertical dimension. The velocities through the clear openings in the trash guard should not exceed 2 feet per second, and preferably should not exceed 1 foot per second, for any stage of the reservoir water surface.

General Comments. The head above the crest required to make a culvert spillway with hood-inlet flow full can be significantly greater than the corresponding head required to make a drop inlet flow full. Comparative cost studies are necessary to determine which of the two types of spillways can be built for the lesser cost for any specific site and set of design criteria.

Problem No. 1: Find the discharges and the location of the hydraulic grade lines for corrugated metal pipe and welded steel pipe in the layout indicated below if both pipes are 12 in. in diameter, and find the minimum absolute pressure for the resulting discharge in both pipes.

Assume n for CMP = 0.025 $\qquad h_a = 26.40$ ft

n for WSP = 0.012 $\qquad$ temp. $H_2O = 60^oF$

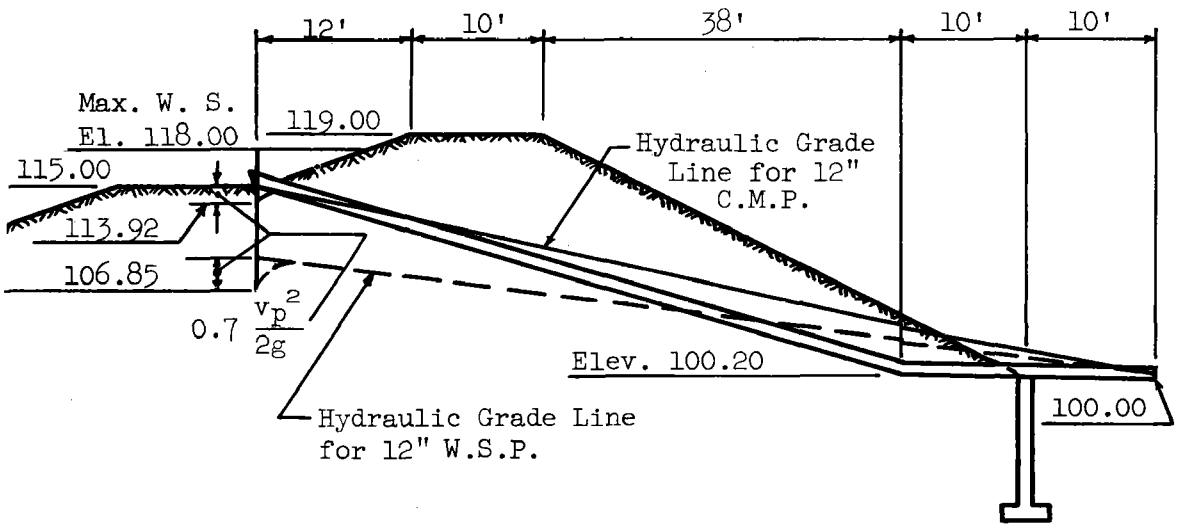

L_1 = length of barrel from inlet to mitered joint at propped outlet, ft

L_2 = length from mitered joint to end of pipe, ft

Solution

$$H = 118.00 - 100.50 = 17.50 \text{ ft}$$

$$L_1 = \sqrt{(60)^2 + (14.8)^2} = 61.80 \text{ ft}$$

$$L_2 = 20 \text{ ft}$$

$$\alpha = \tan^{-1} \frac{14.8}{60} - \tan^{-1} \frac{0.2}{20}$$

$$\alpha = \tan^{-1} 0.2467 - \tan^{-1} 0.01$$

$$\alpha = 13.86^\circ - 0.57^\circ = 13.29^\circ$$

CMP

$$K_m = \frac{n\alpha}{3} = \frac{(0.025)(13.29)}{3} = 0.1108$$

$$K_p = 0.1157 \quad \text{(ES-42)}$$

$$K_e = 1.0$$

$$H = \frac{v_p^2}{2g}\left[1 + K_e + L_1K_p + K_m + L_2K_p\right]$$

$$H = \frac{v_p^2}{64.4}\left[1 + 1 + (61.8)(0.1157) + 0.1108 + (20)(0.1157)\right]$$

$$17.50 = \frac{v_p^2}{64.4}\left[2 + 7.150 + 0.1108 + 2.314\right]$$

$$\frac{v_p^2}{64.4} = \frac{17.50}{11.575} = 1.512 \text{ ft}$$

$$v_p^2 = (1.512)(64.4) = 97.37$$

$$v_p = \sqrt{97.37} = 9.87 \text{ fps}$$

$$Q = av_p = (0.785)(9.87) = 7.75 \text{ cfs}$$

WSP

$$K_m = \frac{n\alpha}{3} = \frac{(0.012)(13.29)}{3} = 0.0532$$

$$K_p = 0.0267 \quad \text{(ES-42)}$$

$$K_e = 1.0$$

$$H = \frac{v_p^2}{2g}\left[1 + K_e + L_1K_p + K_m + L_2K_p\right]$$

$$H = \frac{v_p^2}{64.4}\left[1 + 1 + (61.8)(0.0267) + 0.0532 + (20)(0.0267)\right]$$

$$17.50 = \frac{v_p^2}{64.4}\left[2 + 1.650 + 0.0532 + 0.534\right]$$

$$\frac{v_p^2}{64.4} = \frac{17.50}{4.237} = 4.130 \text{ ft}$$

$$v_p^2 = (4.130)(64.4) = 265.97$$

$$v_p = \sqrt{265.97} = 16.31 \text{ fps}$$

$$Q = av_p = (0.785)(16.31) = 12.80 \text{ cfs}$$

Element	Loss Coeff.	Head Loss	Cumulative Elevation
Outlet Pipe			100.50
L_2	2.314	3.50	104.00
Miter Bend	0.1108	0.17	104.17
L_1	7.150	10.81	114.98
Inlet	1.00	1.51	116.49
Velocity Head	1.00	1.51	118.00
Maximum W.S.			118.00

$$0.7 \frac{v_p^2}{2g} = (0.7)(1.512) = 1.06 \text{ ft}$$

$$h_{ab} = h_a + h - 2.7 \frac{v_p^2}{2g} - D$$

$$= 26.40 + 3.00 - 4.08 - 1.00$$

$$= 24.32 \text{ ft}$$

$h_{ab} > 0.59$ okeh

Element	Loss Coeff.	Head Loss	Cumulative Elevation
Outlet Pipe			100.50
L_2	0.534	2.21	102.71
Miter Bend	0.0532	0.22	102.93
L_1	1.650	6.81	109.74
Inlet	1.00	4.13	113.87
Velocity Head	1.00	4.13	118.00
Maximum W.S.			118.00

$$0.7 \frac{v_p^2}{2g} = (0.7)(4.130) = 2.89 \text{ ft}$$

$$h_{ab} = h_a + h - 2.7 \frac{v_p^2}{2g} - D$$

$$= 26.40 + 3.00 - 11.15 - 1.00$$

$$= 17.25 \text{ ft}$$

$h_{ab} > 0.59$ okeh

Problem No. 2: Find the discharges and the location of the hydraulic grade lines for corrugated metal pipe and welded steel pipe in the layout indicated below if both pipes are 18 in. in diameter, and find the minimum absolute pressure for the resulting discharges in both pipes.

Assume n for CMP = 0.025 $\quad h_a = 29.50$ ft

n for WSP = 0.010 $\quad$ temp. $H_2O = 84^oF$

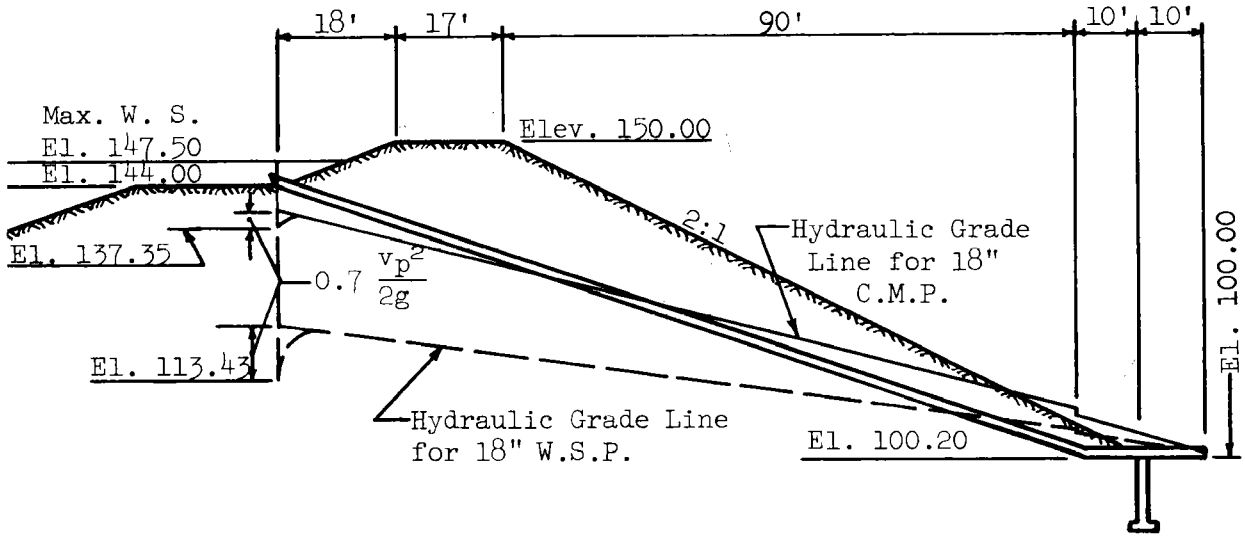

L_1 = length of barrel from inlet to mitered joint at propped outlet, ft

L_2 = length from mitered joint to end of pipe, ft

Solution

$$H = 147.5 - 100.75 = 46.75 \text{ ft}$$

$$L_1 = \sqrt{(43.8)^2 + (125)^2} = 132.45 \text{ ft}$$

$$L_2 = 20 \text{ ft}$$

$$\alpha = \tan^{-1}\frac{43.8}{125} - \tan^{-1}\frac{0.2}{20}$$

$$\alpha = \tan^{-1} 0.3504 - \tan^{-1} 0.01$$

$$\alpha = 19.31^o - 0.57^o = 18.74^o$$

CMP

$$K_m = \frac{n\alpha}{3} = \frac{(0.025)(18.74)}{3} = 0.1562$$

$K_p = 0.0674$ (ES-42)

$K_e = 1.0$

WSP

$$K_m = \frac{n\alpha}{3} = \frac{(0.010)(18.74)}{3} = 0.0625$$

$K_p = 0.01078$ (ES-42)

$K_e = 1.0$

CMP

$$H = \frac{v_p^2}{2g}\left[1 + K_e + L_1K_p + K_m + L_2K_p\right]$$

$$H = \frac{v_p^2}{64.4}\left[1 + 1 + (132.45)(0.0674) + 0.1562 + (20)(0.0674)\right]$$

$$46.75 = \frac{v_p^2}{64.4}\left[2 + 8.927 + 0.1562 + 1.348\right]$$

$$\frac{v_p^2}{64.4} = \frac{46.75}{12.431} = 3.761 \text{ ft}$$

$$v_p^2 = (3.761)(64.4) = 242.21$$

$$v_p = \sqrt{242.21} = 15.56 \text{ fps}$$

$$Q = av_p = (1.77)(15.56) = 27.54 \text{ cfs}$$

Element	Loss Coeff.	Head Loss	Cumulative Elevation
Outlet Pipe			100.75
L_2	1.348	5.07	105.82
Miter Bend	0.1562	0.59	106.41
L_1	8.927	33.57	139.98
Inlet	1.00	3.76	143.74
Velocity Head	1	3.76	147.50
Maximum W.S.			147.50

$$0.7\,\frac{v_p^2}{2g} = (0.7)(3.761) = 2.63 \text{ ft}$$

$$h_{ab} = h_a + h - 2.7\,\frac{v_p^2}{2g} - D$$

$$= 29.50 + 3.50 - 10.15 - 1.50$$

$$= 21.35 \text{ ft}$$

$h_{ab} > 1.33$ okeh

WSP

$$H = \frac{v_p^2}{2g}\left[1 + K_e + L_1K_p + K_m + L_2K_p\right]$$

$$H = \frac{v_p^2}{64.4}\left[1 + 1 + (132.45)(0.01078) + 0.0625 + (20)(0.01078)\right]$$

$$46.75 = \frac{v_p^2}{64.4}\left[2 + 1.428 + 0.0625 + 0.2156\right]$$

$$\frac{v_p^2}{64.4} = \frac{46.75}{3.706} = 12.615 \text{ ft}$$

$$v_p^2 = (12.615)(64.4) = 812.41$$

$$v_p = \sqrt{812.41} = 28.50 \text{ fps}$$

$$Q = av_p = (1.77)(28.50) = 50.45 \text{ cfs}$$

Element	Loss Coeff.	Head Loss	Cumulative Elevation
Outlet Pipe			100.75
L_2	0.2156	2.72	103.47
Miter Bend	0.0625	0.78	104.25
L_1	1.428	18.01	122.26
Inlet	1.00	12.62	134.88
Velocity Head	1.00	12.62	147.50
Maximum W.S.			147.50

$$0.7\,\frac{v_p^2}{2g} = (0.7)(12.615) = 8.83 \text{ ft}$$

$$h_{ab} = h_a + h - 2.7\,\frac{v_p^2}{2g} - D$$

$$= 29.50 + 3.50 - 34.06 - 1.50$$

$$= -2.56 \text{ ft}$$

$h_{ab} < 0$--impossible, cavitation and reduced discharge will occur

Problem No. 3: For the spillway layout indicated (1) calculate the stage-discharge curve, (2) compute and plot the lowest position of the hydraulic grade line, (3) compute the minimum absolute pressure in the pipe when it first starts to flow full of water and for maximum discharge. Assume the atmospheric pressure equal to 29.10 ft of water and a water temperature equal to 60°F.

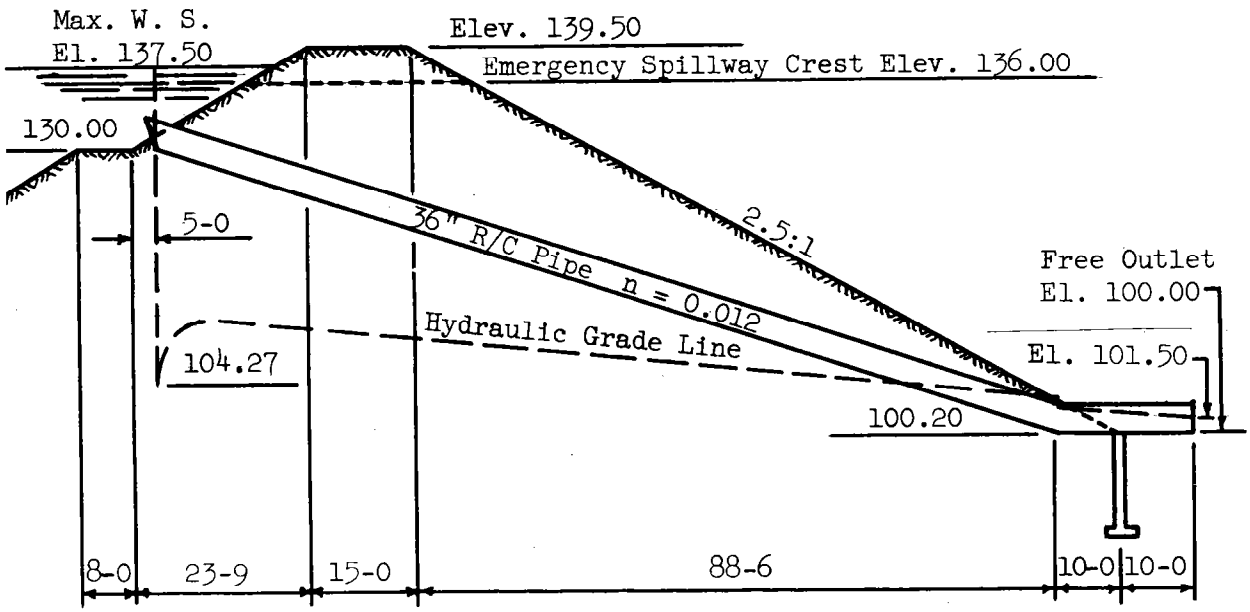

(1) For values of head in the range $0 \leq \frac{h}{D} \leq 1.1$, the inlet controls the discharge. For this condition the discharge is computed from the data given in Table No. 1 and ES-108. It is convenient to tabulate the computations as indicated below.

$\frac{h}{D}$	$\frac{Q}{D^{5/2}}$	Q	h
0	0	0	0
0.2	0.16	2	0.6
0.4	0.46	7	1.2
0.6	0.88	14	1.8
0.8	1.56	24	2.4
1.0	2.20	34	3.0
1.1	2.50	39	3.3

For values of head in the range $\frac{h}{D} > 1.1$ to full-pipe flow, the discharge can be computed from Eq. 8.

From Eq. 13 and 8 find the value of $\frac{h}{D}$ at which full-pipe flow starts. Evaluate M for substitution in Eq. 13.

$$M = 1 + K_e + K_pL_1 + K_m + K_pL_2$$

$$L_1 = \sqrt{(29.80)^2 + (122.25)^2} = 125.83 \text{ ft}$$

$$L_2 = 20 \text{ ft} \; ; \; K_p = 0.00616 \quad \text{(from ES-42)}$$

$$\alpha = \tan^{-1}\frac{29.80}{122.25} - \tan^{-1}\frac{0.20}{20} = 13^o39' = 13.65^o$$

$$K_m = \frac{n\alpha}{3} = \frac{(0.012)(13.65)}{3} = 0.0546$$

$$M = 1 + 1 + (0.00616)(125.83) + 0.0546 + (0.00616)(20)$$
$$= 1 + 1 + 0.7751 + 0.0546 + 0.1232 = 2.9529 \; ; \quad M > 2.7$$

Let $\frac{Q}{D^{5/2}} = x$, then Eq. 13 becomes

$$x^2 - \frac{0.992}{M}x - \frac{39.68}{M}\left(0.538 + \frac{Z}{D}\right) = 0$$

$$x^2 - \frac{0.992}{2.953}x - \frac{(39.68)(10.538)}{2.953} = 0$$

$$x = 12.07 = \frac{Q}{D^{5/2}}$$

From ES-108 for $\frac{Q}{D^{5/2}} = 12.07$, $Q = 188$ cfs

From Eq. 8

$$\frac{h}{D} = 1.1 + 0.025\left(\frac{Q}{D^{5/2}} - 2.5\right)$$
$$= 1.1 + 0.025\,(12.07 - 2.5) = 1.34$$

Hence the pipe will start to flow full when the discharge is 188 cfs and $\frac{h}{D} = 1.34$ or $h = (3)(1.34) = 4.02$ ft.

Equation 8 expresses a linear relationship between h and Q. Hence the stage-discharge curve is a straight line from Q = 39 cfs to Q = 188 cfs.

Full-pipe flow exists for values of Q greater than 188 cfs. The total head H is effective in producing discharge under pipe-flow conditions.

$$H = \frac{v_p^2}{2g} M = h + Z - \frac{D}{2} = h + 30 - \frac{3}{2}$$

$$v_p^2 = \frac{2g\ (h + 28.5)}{M}$$

$$Q = a \sqrt{\frac{2g\ (h + 28.5)}{M}} = \frac{(7.07)(8.02)}{1.718} \sqrt{h + 28.5}$$

$$= 33.0 \sqrt{h + 28.5}$$

h	Q
4.02	188
5	191
6	194
7	197
7.5	198

The stage-discharge curve has been plotted on the following graph.

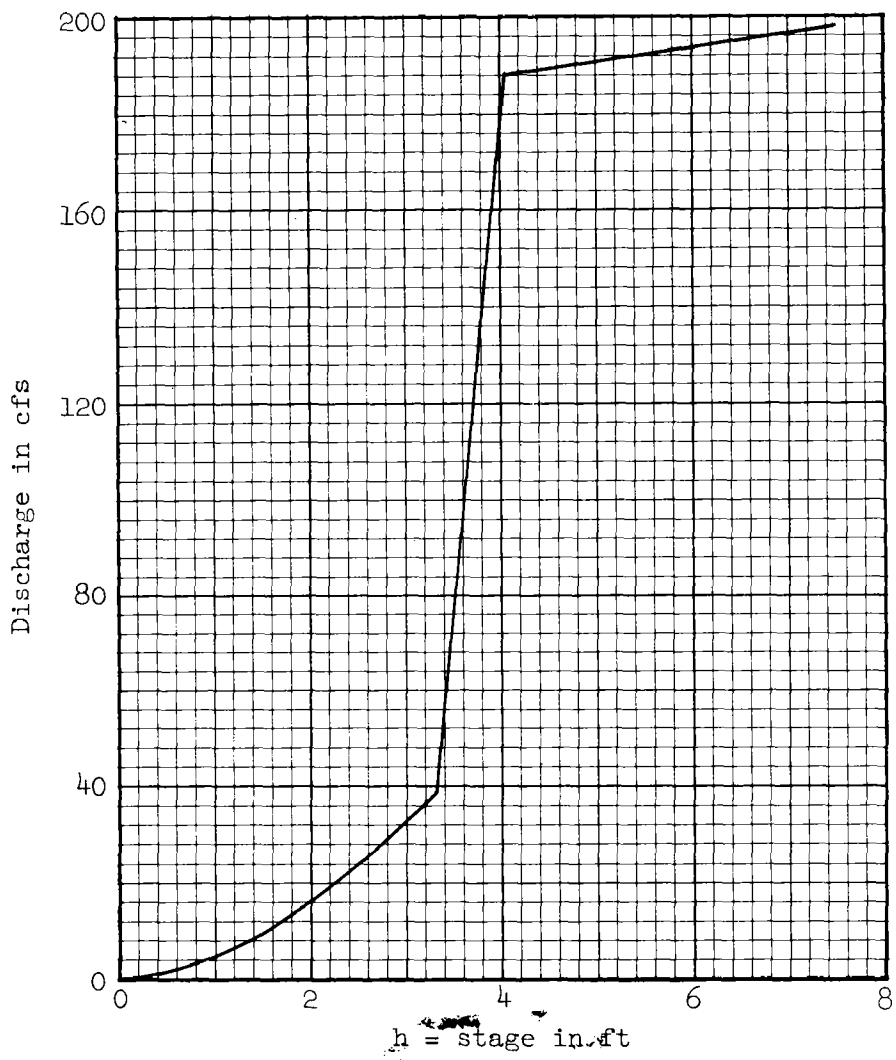

(2) Since M is greater than 2.7 and since the friction losses decrease as the velocity decreases, the lowest position of the hydraulic grade line will exist just at the start of full-pipe flow when Q = 188 cfs.

$$v_p = \frac{Q}{a} = \frac{188}{7.07} = 26.6 \text{ fps} \; ; \quad \frac{v_p^2}{2g} = 11.02 \text{ fps}$$

The following table presents the computations for the hydraulic grade line location.

Computations for Hydraulic Grade Line---Q = 188 cfs

Element	Loss Coefficient	Head Loss	Cumulative Elevation
Outlet			101.50
L_2	0.1232	1.36	102.86
Miter Bend	0.0546	0.60	103.46
L_1	0.7751	8.52	111.98
Inlet	1.0000	11.02	123.00
Velocity Head	1.0000	11.02	134.02
Water Surface	M = 2.9529	H = 32.52	134.02

The local deviation below the hydraulic grade line = $0.7 \frac{v_p^2}{2g} = (0.7)(11.02)$ = 7.71 ft. 111.98 − 7.71 = 104.27 = elevation of the pressure gradient at the crown of the inlet.

(3) When the pipe first starts to flow full (Q = 188 cfs) the minimum absolute pressure is found from Eq. 10 as follows:

$$h_{ab} = h_a + h - 2.7 \frac{v_p^2}{2g} - D$$

$$= 29.10 + 4.02 - (2.7)(11.02) - 3 = 0.37 \text{ ft}$$

The vapor pressure for water at 60°F equals 0.59 ft. Cavitation will occur since the absolute pressure is less than the vapor pressure.

When the water-surface elevation in the reservoir is 137.50 and Q = 198 cfs, the minimum absolute pressure is

$$v_p = \frac{Q}{a} = \frac{198}{7.07} = 28.1 \text{ fps} \; ; \quad \frac{v_p^2}{2g} = 12.28 \text{ ft}$$

h_{ab} = 29.10 + 7.50 − (2.7)(12.28) − 3.00 = 0.44 ft which is also less than the vapor pressure, i.e., a situation which cannot exist.