United States Department of Agriculture

Natural Resources Conservation Service

June 2004

Wetlands Reserve Program

Forest Land Compatible Use Guidelines

June 2004

The U.S. Department of Agriculture (USDA) prohibits discrimination in all its programs and activities on the basis of race, color, national origin, sex, religion, age, disability, political beliefs, sexual orientation, or marital or family status. (Not all prohibited bases apply to all programs.) Persons with disabilities who require alternative means for communication of program information (Braille, large print, audiotape, etc.) should contact USDA's TARGET Center at (202) 720-2600 (voice and TDD).

To file a complaint of discrimination, write USDA, Director, Office of Civil Rights, Room 326W, Whitten Building, 14th and Independence Avenue, SW, Washington, DC 20250-9410 or call (202) 720-5964 (voice and TDD). USDA is an equal opportunity provider and employer.

Preface

This report by the Forest Land Workgroup was developed for use by field conservationists to determine whether forest land compatible use is appropriate for a particular Wetland Reserve Program (WRP) or similar easement. It can also be used by state biologists to develop guidance for forest land types in their state.

The workgroup was established as a result of an Oversight and Evaluation study completed in 2000. The members of this workgroup are representatives from the USDA Natural Resources Conservation Service (NRCS), the U.S. Department of Interior Fish and Wildlife Service (FWS) and U.S. Geological offices (USGS), and the Mississippi State University (MSU). They are listed below.

Mike W. Anderson, national wildlife biologist, NRCS, Washington, DC (retired)

David Brownlie, regional fire ecologist, FWS, Tall Timbers Research Station, Tallahassee, Florida

Jeff Combs, WRP wetland specialist, NRCS, Alexandria, Louisiana

Ed Hackett, wildlife biologist, NRCS, Wildlife Habitat Management Institute, Madison, Mississippi

Chuck Hunter, deputy chief, Division of Migratory Birds, FWS, Atlanta, Georgia

Doug Helmers, team leader, NRCS, Missouri Wetland Emphasis Team, Chillicothe, Missouri

Norman Melvin, Ph.D., plant ecologist, NRCS, Wetland Science Institute, Harrisburg, Pennsylvania

Jody Pagan, biologist, NRCS, Little Rock, Arkansas

Gil Ray, natural resource specialist, NRCS, Jackson, Mississippi

Daniel J. Twedt, Ph.D., wildlife biologist, USGS-BRD, Patuxent Wildlife Research Center, Laurel, Maryland

Jon Wessman, biologist, FWS, Conway, Arkansas

Mark S. Woodrey, Ph.D., research coordinator, Mississippi State University, Coastal Research and Extension Center, Biloxi, Mississippi

Nancy Young, forester, NRCS, Little Rock, Arkansas

Executive Summary

The Wetlands Reserve Program (WRP), as authorized by Congress under the Food Security Act of 1985 and amended in the 1990, 1996, and 2002 Farm Bills, is a voluntary program to restore and protect wetlands on private property. The U.S. Department of Agriculture's Natural Resources Conservation Service (NRCS) administers WRP in consultation with the Farm Service Agency (FSA) and other Federal agencies.

Special emphasis is given to the provision of habitat for migratory birds and wetland-dependent wildlife, including threatened and endangered species. Additionally, WRP seeks to protect and improve water quality, attenuate water flows from flooding, recharge ground water, protect and enhance open space and aesthetic quality, protect native flora and fauna that contribute to the Nation's natural heritage, and contribute to educational and scientific scholarship.

On acreage subject to a WRP easement, participants control access to the property and may lease the land for hunting, fishing, and other undeveloped recreational activities. At any time, the landowner may request that additional activities be evaluated to determine if they are compatible uses for the site. Only activities that further both the long-term protection and enhancement of the wetland and other natural values of the project area may be authorized as a compatible use.

The Forest Land Workgroup was charged with reviewing information on migratory bird responses to timber harvest and developing management guidelines for use when evaluating/developing compatible uses of WRP easements involving timber harvest. The report provides information on the responses of birds to the disturbance caused by even-aged and uneven-aged silvicultural systems in bottomland hardwood forests. Although this original document reviews the impact of timber harvest on migratory birds in the Lower Mississippi Valley, the principles and concepts developed have broader applicability to forested WRP tracts in other parts of the United States.

The approach developed in this report builds on the planning activities undertaken by the bird conservation community and is consistent with the draft Memorandum of Understanding between USDA Natural Resource Conservation Service, USDA Farm Service Agency, and U.S Fish and Wildlife Service on Migratory Bird Conservation.

Similar tables can be generated for forest lands in other physiographic areas. Expanded species response tables could also be readily generated to provide guidance to land managers regarding the effects of other activities on migratory birds.

Decisionmaking process

The challenge faced by NRCS in managing WRP is creating the balance between the longstanding tradition of providing technical assistance that offers management alternatives for a landowner decision that complies with the primary emphasis of the easement for migratory birds and meeting the public's perception of our management of the easement in which

they have invested tax dollars to assist the producer and gain public values. Therefore, decisions regarding timber harvest on bottomland hardwood forests should improve existing avian habitat and possibly generate financial return for the landowner.

This report offers the following process for developing compatible use plans:

- Identify the Partners in Flight (PIF) physiographic area
- Identify joint venture area from North American Waterfowl Management Plan
- Identify Shorebird and Colonial Waterbird Plans
- Identify the PIF priority bird species

Recommendations

After reviewing the above information, the workgroup developed the following recommendations for harvesting bottomland hardwoods in the Lower Mississippi Valley:

- Uneven-aged timber harvest (e.g., thinning, single-tree, and group selection).
- Intensity of uneven-aged harvests should be such that less than 30 percent of the forest canopy (circa <30% of merchantable volume) is removed, but remaining canopy cover should not be less than 60 percent.
- Harvest should occur between August 1 and February 28; however, habitat improving harvests may be undertaken between March 1 and July 31 when the alternative is no habitat improvement.
- A diversity of canopy species should be perpetuated.
- Several large, “free-to-grow,” residual trees should remain.
- Canopy gaps are created of sufficient size to promote understory development.
- Cavity trees or potential cavity trees (e.g., unsound cull trees) should remain.
- Switchcane (*Arundinaria gigantea*) and Spanish moss (*Tillandsia usneoides*) should be encouraged to expand and proliferate.

Wetlands Reserve Program

Forest Land Compatible Use Guidelines

Contents:

Preface **i**

Executive Summary **ii**

Introduction **1**

Wetland Reserve Program (WRP) 1
Compatible uses 1
Forest land workgroup 1
Scope and organization of report 2
Guidelines for hardwood forest management to improve wildlife habitat 3

Recommendation for timber harvest **7**

Background 7
Silvicultural options 7
Tree species importance 8
Special considerations 9
Literature summaries 9
Species-specific assessments 11

Guidelines for landscape level issues for nongame birds **12**

Landscape considerations 12
More detail 13

References **14**

Appendix 1—Forest Management Compatible Use Authorization Request Process **23**

Tables

Table 1 Desired forest conditions to meet habitat needs 5

Table 2 Projected response to timber harvest by Partners in Flight priority forest bird species in the Mississippi Alluvial Valley 6

Wetlands Reserve Program
Forest Land Compatible Use Guidelines

Introduction

Wetland Reserve Program (WRP)

The Wetlands Reserve Program (WRP), as authorized by Congress under the Food Security Act of 1985 and amended in the 1990, 1996, and 2002 Farm Bills is a voluntary program to restore and protect wetlands on private property. The United States Department of Agriculture's (USDA) Natural Resources Conservation Service (NRCS) administers WRP in consultation with the Farm Service Agency (FSA) and other Federal agencies. NRCS's goal is to restore wetland functions and values while optimizing wildlife habitat on every acre enrolled in the program. Specifically, WRP objectives are to

- help eligible landowners protect, restore, and enhance the original hydrology, native vegetation, and natural topography of eligible lands;
- restore and protect the functions and values of wetlands in agricultural landscapes;
- help achieve the national goal of no net loss of wetlands; and
- improve the general environment of the country.

Special emphasis is given to the provision of habitat for migratory birds and wetland-dependent wildlife, including threatened and endangered (T&E) species. Additionally, WRP seeks to protect and improve water quality; attenuate water flows because of flooding; recharge ground water; protect and enhance open space and aesthetic quality; protect native flora and fauna that contribute to the Nation's natural heritage; and contribute to educational and scientific scholarship.

Compatible uses

On acreage subject to a WRP easement, participants control access to the property and may lease the land for hunting, fishing, and other undeveloped recreational activities. At any time, the landowner may request that additional activities be evaluated to determine if they are compatible uses for the site. Only activities that further both the long-term protection and enhancement of the wetland and other natural values of the project area may be authorized as a compatible use. Appendix 1 can be used to assist landowners requesting compatible use authorization for forest management activities on WRP easements.

Forest land workgroup

An Oversight and Evaluation study conducted in 2000 found instances of grazing and timber harvest on WRP easements that appeared to be inconsistent with program goals. Consequently, a critical preliminary finding was issued that resulted in the NRCS National Office putting a hold on all grazing and timber harvesting compatible uses until the States reviewed them to ensure they were compatible with the easement purpose. Two workgroups were established under a Management Action Plan developed by the Deputy Chief for Programs. They both were assigned to look at the compatibility of grazing and timber harvest on WRP easements. The forest land workgroup was charged with reviewing information on migratory bird responses to timber harvest and the development of management guidelines for use by NRCS resource managers when evaluating/developing compatible uses of WRP easements involving timber harvest. Although this document reviews the impact of forest management on migratory birds in the Lower Mississippi Valley, it is recognized that the principles and concepts developed have broader applicability to forested WRP tracts in other parts of the United States.

The forest land workgroup included invited representatives from the NRCS national headquarters, state offices (Arkansas, Louisiana, Missouri, and Mississippi), and the Wetland Science Institute (WSI) and Wildlife Habitat Management Institute (WHMI); U.S. Department of the Interior's Fish and Wildlife Service (FWS) and Geological Survey-Biological Resources Division (USGS/BRD); and Mississippi State University (MSU). Members of the workgroup were Mike W. Anderson (NRCS-NHQ), Ed Hackett (NRCS-WHMI), Dan Twedt (USGS/BRD), Mark Woodrey (MSU), Chuck Hunter (FWS), Nancy Young (NRCS-AR), John Wessman (FWS), Gil Ray (NRCS-MS), Jody Pagan (NRCS-AR), Doug Helmers (NRCS-MO), Jeff Combs (NRCS-LA), Norman Melvin (NRCS-WSI), and Dave Brownlie (FWS).

Scope and organization of report

Whereas guidance clearly is needed regarding the compatibility of all proposed activities on WRP forest lands throughout the United States, this report is narrowly focused on timber harvest and planning for migratory birds within bottomland hardwood forests of the Lower Mississippi Valley. The forest land report consists of an executive summary, introduction, and three major elements:

- Review of bird responses timber harvest
- Proposed framework (decision matrix) for assessing timber harvest effects on migratory birds
- List of literature on timber harvest effects on birds

Approach

The forest land report provides information on the responses of birds to the disturbance caused by even-aged and uneven-aged silvicultural systems in bottomland hardwood forests. Although uneven-aged management is thought to be the most useful option for WRP, care should be taken to understand the even-aged management option.

Species response tables

Based on the workgroup's review of the literature and expert opinion provided by workgroup members, tables were developed depicting the anticipated numeric responses to timber harvest by selected species of migratory birds for the Lower Mississippi Valley physiographic area. Physiographic areas are vegetative communities recognized by The Nature Conservancy and adopted by Partners In Flight (PIF) for bird conservation planning. The Lower Mississippi Valley was selected because of the amount of WRP being established and the research being conducted on migratory birds in the physiographic area. (Note that identification and ranking of physiographic areas based on the frequency of occurrence of WRP projects are not feasible because data needed to precisely map WRP sites by wetland category are not available at this time.)

Responses to timber harvest were indicated as positive (+), neutral (0), negative (–) or left blank when the effect was unknown. The response table indicator was based on changes in abundance, nest success, or survival substantiated by the literature and expert opinion. Species included in the tables are those designated by bird conservation groups as being of greatest concern.

Justification for approach

Variable responses by birds to habitat manipulations contribute to confusion among planners about the net effect of management on bird conservation. For example, with respect to timber harvest effects on forest birds, some species show strong preferences for early succession that has reduced vertical structure, whereas others prefer mature forests with complex structure. Thus, it is apparent that consensus among conservation interests and a priority selection of target species are critical to successful planning, implementation, and evaluation of conservation activities. The focused approach adopted by the forest land workgroup seeks to reduce the ambiguity associated with considering all birds. The approach developed in this report builds on the planning activities undertaken by the bird conservation community and is consistent with the draft Memorandum of Understanding (MOU) (dated 4-22-02) between USDA Natural Resource Conservation Service, USDA Farm Service Agency, and U.S Fish and Wildlife Service on Migratory Bird Conservation. The draft MOU requires that

> *Within established authorities and in conjunction with the adoption, amendment, or revision of agency management plans, programs and technical guidance, ensure that agency plans and actions promote programs and recommendations of the comprehensive planning efforts for migratory birds, such as Partners In Flight Bird Conservation Plans, U.S. National Shorebird, North American Waterfowl Management Plan, North American Colonial Waterbird Plan, and the integration of these and other bird conservation planning efforts through the North American Bird Conservation Initiative.*

The North American Waterfowl Management Plan is the oldest and most established bird conservation plan; however, some sites where WRP has been implemented fall outside of established joint venture areas and species priorities are not designated in joint venture areas. Shorebird and colonial waterbird plans are in early stages of development. Although plans have not been finalized for some physiographic areas, emphasis in this report was placed on species

identified in PIF bird conservation plans because conservation plans will be available for all regions of the country and the procedure used to rank species is consistent across physiographic regions (Carter et al. 2000).

Generality
The approach outlined in this report has broad application to management of forest lands for migratory birds. Similar tables can be generated for forest lands in other physiographic areas. Expanded species response tables could also be readily generated to provide guidance to land managers regarding the effects of other activities on migratory birds.

Guidelines for hardwood forest management to improve wildlife habitat

Although forest management has long been used to enhance habitat for common game species, hardwood forest management has only recently undertaken the challenge of improving forest habitat for priority forest birds (e.g., Swainson's warbler, Cerulean warbler, swallow-tailed kite, white-eyed vireo, orchard oriole, Kentucky warbler, and Mississippi kite). Similarly, silvicultural manipulations have rarely targeted habitat conditions for other wildlife (e.g., black bear, American woodcock). It is important to note that the habitat requirements of many of these species are similar enough that forests managed to meet the general habitat conditions for one species most likely fulfills the habitat requirements of many other priority species. Maximum habitat conditions may not be attained for all species, but habitat conditions for the broad group will be improved. Having merchantable standing timber greatly increases management options and the ability to meet the desired future forest stand conditions. Therefore, merchantability is an important consideration, but should not come at the expense of desired wildlife values.

Desired forest conditions to meet the habitat needs of many priority wildlife species and recommended management guidelines to achieve these desired conditions are described in this section. Table 1 lists target forest conditions and conditions that may warrant management. The frequency of entry into a stand is assumed to be every 10 to 15 years to evaluate the stand based on its forest inventory, stand conditions, and the stand's desired condition using established objectives. Management actions should be based on these evaluations, and in some cases no management action will be necessary. The desired stand conditions and management actions described in this section were developed by a group of foresters and biologists familiar with forest management on Bayou Cocodrie National Wildlife Refuge and Tensas River National Wildlife Refuge. These descriptions are general and will probably be modified as more information becomes available. More detailed information is needed before specific management plans are written and implemented. Timber management should be conducted only after forest inventories are known, stands are evaluated, and management objectives are established.

The long-term objective generally is to improve forest habitat for priority bird species by developing a structurally diverse forest in terms of species, size class, and growth forms (trees, shrubs, vines, and forbs) within a heterogeneous forest canopy. These forests should have canopy gaps where understory vegetation (cane, shrubs, vines) can proliferate and have two to six super-emergent trees per acre. Additionally, to support the needs of wildlife that are dependent on hard mast (black bear, squirrels, turkey), regeneration of shade-intolerant tree species, such as oaks, must be ensured.

To meet these objectives, general guidelines for timber harvest should include a combination of thinning, cutting small groups of trees (<1 acre), and harvesting patches between 1 and 3 acres. This harvest strategy is intended to

- release remaining trees for development of canopies and dominant trees that will eventually become super-emergent trees,
- encourage development of ground and midstory structure, and
- increase the amount of light reaching the forest floor in areas large enough to support regeneration of shade-intolerant tree species.

Specific guidelines include thinning the stand via single-tree and group-selection cuts to a basal area of 70 to 90 square feet per acre (16–20 m^2/ha). Thinning to this basal area can result in a canopy cover between 50 and 70 percent. However, canopy cover of less than 60 percent should be avoided except

within patches that target regeneration of shade-intolerant trees (see below). Depending on the average diameter of unharvested trees, the remaining basal area may represent as few as 20 trees per acre (30-inch dbh trees thinned to 70 ft^2/acre), 200 trees per acre (9-inch dbh trees thinned to 90 ft^2/acre), or significantly more trees per acre if they are of smaller diameter. In his article, *A Stocking Guide for Southern Bottomland Hardwoods*, Goelz (1995) provides equations and figures for relating basal area to trees per acre. These equations and figures are useful for planning timber harvests. In general, thinning enhances wildlife habitat for priority species on any stand that is more than 100 percent stocked (minimum basal area of about 100 ft^2/acre; but see Goelz [1995] for specifics). When available, four to six cavity trees (or unsound culls) per acre should remain after thinning.

Table 2 shows the projected response to timber harvest by priority forest bird species in the Mississippi Alluvial Valley.

To provide for regeneration of shade-intolerant trees, 1-acre to 3-acre patches should be harvested on 5 to 10 percent of the stand. Leaving four to six large trees per acre within these small clearcuts maintains some overstory, and use of these harvested sites by forest birds is more likely. Additionally, some of these "seed trees" may develop into super-emergent trees. Patches should be located where regeneration of shade-intolerant tree species is present or highly likely. As a general guideline, between 30 and 60 percent, preferably 40 to 50 percent, of most stands should be hard mast-producing tree species, such as oaks and hickories. However, this recommendation varies among stands.

Note: Super-emergent trees are large trees (>35 inches dbh) with big crowns that extend well above the plane of the forest canopy (at least 50 to 75 percent of the crown or 20 to 25 feet). Historically, between two and four super-emergent trees per acre is average.

Many stands are in settings, or have conditions or different capabilities that mandate more restrictive forest management options or multiple management entries/actions to achieve desired conditions. No single recipe exists for achieving desired results. Species priorities and forest management objectives require evaluation on a site-by-site basis that involves the skill of a forester and biologist working together to establish objectives, evaluate stand conditions, write management prescriptions, and evaluate results.

Many questions remain in hardwood management that can only be answered with evaluation and research. Hopefully, coordinated work between foresters and biologists will address these questions, and, over time, management capability and confidence will grow to facilitate improved decisions that benefit forest and wildlife resources. Fortunately, we are working with a renewable resource that can recover from imperfect decisions. As is often the case, the biggest mistakes come from never trying management actions. However, evaluation of management decisions and adaptive management are critical to assure the objectives are achieved and management techniques are improved.

Table 1 Desired forest conditions to meet habitat needs

Target forest conditions	Conditions that may warrant management
60%–80% **canopy** cover	>90% **canopy** cover
Basal area 70–90 ft^2/acre (16–20 m^2/ha)	**Basal area** >100 ft^2/acre (>28 m^2/ha)
60%–80% **stocking**	>100% **stocking**
Vines in overstory on 40%–60% of inventory (cruise) plots	**Vines in overstory** on <30% of inventory (cruise) plots
Super-emergent trees on 10%–20% of inventory (cruise) plots (4 to 6 super-emergent trees per acre)	**Super-emergent** trees <5% of inventory (cruise) plots (<1 super-emergent trees per acre)
Midstory canopy on 30%–60% of stand	**Midstory** canopy on <20% of stand
Vines in midstory on 50%–70% of inventory (cruise) plots	**Vines in midstory** on <30% of inventory (cruise) plots
Understory canopy cover on 40%–50% of stand	**Understory** canopy cover on <30% of stand
20%–50% **ground cover** occupancy average across inventory (cruise) plots	<20% **ground cover** occupancy average across inventory (cruise) plots
Cane present on 20%–40% of inventory (cruise) plots	**Cane** present on <20% of inventory (cruise) plots
Regeneration of **hard mast** tree species (oaks and hickories) on 30%–50% of inventory (cruise) plots	Regeneration of **hard mast** tree species (oaks and hickories) on <20% of inventory (cruise) plots
2 to 4 logs/acre that provide **coarse, woody debris**	<2 logs/acre that provide **coarse, woody debris**
4 to 6 **cavity trees** (snags) >4 inches dbh/acre	<4 **cavity trees** (snags) >4 inches dbh/acre
1 to 4 large "**den**" **trees** or "**unsound cull**" trees per 10 acres	<1 large "**den**" **tree** or "**unsound cull**" tree per 10 acres

Table 2 Projected response to timber harvest by Partners in Flight priority forest bird species in the Mississippi Alluvial Valley

Species[1]	Habitat[2]	PIF total score[3]	Ranking criteria[4]	Residence status[5]	Uneven-aged harvest impacts[6]
Prothonotary warbler	MF	28	1	MBR	0
Cerulean warbler	MF	27	1	MBR	+
Swainson's warbler	MF	27	1	MBR	+
Swallow-tailed kite	MF	26	1	MBR	
American woodcock	MF	25	1	RES	+
Mississippi kite	MF–FS	25	1	MBR	
Wood thrush	MF	25	1	MBR	–
Northern parula	MF	24	1	MBR	
Red-headed woodpecker	MF	24	1	RES	+
Orchard oriole	MF	23	1	MBR	+
Painted bunting	SH	23	1	MBR	+
White-eyed vireo	MF–SH	23	1	MBR	+
Brown thrasher	FS	22	2	RES	+
Chuck-will's-widow	MF	22	2	MBR	+
Kentucky warbler	MF	22	3	MBR	+
Ruby-throated hummingbird	MF–FS	22	2	MBR	+
Rusty blackbird	MF	22	2	WTR	
Baltimore oriole	MF	21	2	MBR	+
Carolina chickadee	MF	21	2	RES	
Palm warbler	MF	21	2	WTR	
Wood duck	WE–MF	21	2	RES	
Yellow-billed cuckoo	MF	21	2	MBR	0
Yellow-breasted chat	MF–SH	21	2	MBR	+
Eastern wood-pewee	MF	20	2	MBR	+
Red-bellied woodpecker	MF	20	2	RES	0

1 Species: Official common name from the AOU Checklist, 7th edition.
2 Habitats: MF = mature forest, FS = farmland/suburban, SH = shrubland, WE = wetland.
3 PIF total score: Based on Carter et al. (2000): http://www.rmbo.org/pif/pifdb.html.
4 Ranking criteria for inclusion: 1 = PIF total score ≥23 and species occurs in manageable numbers; 2 = PIF total score 20-22 with sum of AI and PT scores ≥8.
5 Residence status: RES = permanent, year-round resident, MBR = migrant breeder, MIG = migrant, and WTR = migrant winter resident.
6 Timber harvest response: Based on changes in abundance, nest success, or survival: + = positive response, – = negative response, 0 = neutral response, no entry implies no data available or unknown effect.

Recommendation for timber harvest

Background

For many forest bird species of management concern, large patches of mature forest are desirable as breeding habitat. These forest patches should have both vertical and horizontal stratification, a diversity of woody species, well developed midstory and understory associated with canopy gaps, and some trees that emerge above the dominant canopy. Forests of this description are sometimes referred to as *irregular* forests.

Most extant bottomland forests in the Southeastern United States have been subjected to previous timber harvest and therefore support second growth forest conditions. These conditions vary, but generally these forests have somewhat closed canopies, are relatively uniform in height, and have little midstory and understory vegetation. Emergent trees are rarely present, and gaps created by natural disturbance (e.g., windthrow) are not numerous. These forests may be referred to as *regular* forests.

If unmanaged, decadence of individual trees within regular forests eventually shifts them towards irregular forests. This is caused by the increased vertical stratification from the development of more canopy gaps and the slow development of canopy emergent trees. Similar habitat conditions may be achieved by transforming regular forests to irregular forests through judicial forest management, also known as *plentering* (Schutz 2001). However, managers should also be aware that disturbance from logging may result in long-term (>100 year) changes in the forest ecosystem (Bratton 1994).

Silvicultural options

Even-aged management
The impact of even-aged timber harvest on avian abundance is fairly well established. Even-aged management (i.e., clearcut, seed-tree, shelterwood, or 2-age cut) generally results in a dramatically different species composition of breeding and wintering birds within the forest stand. Even-aged management promotes a species shift towards scrub-shrub birds (e.g., yellow-breasted chat, white-eyed vireo, indigo bunting, prairie warbler) and reduces abundance of many mature forest birds (e.g., red-eyed vireo, Acadian flycatcher, summer tanager, wood thrush). Additionally, where forests are fragmented nesting success of forest birds following even-aged management initially is reduced, but gradually increases over time as the forest recovers. Even-aged (clearcut) harvest may also negatively impact nesting success (at least for some species) in adjacent unharvested forests; ground nesting birds, especially ovenbirds, appear particularly vulnerable. Even-aged harvest generally fails to reproduce habitat conditions similar to those that naturally develop in bottomland forests. Some may argue that even-aged harvests mimic natural catastrophic events (hurricanes, fire, and ice storms). However, unlike most even-aged harvests, these natural catastrophes leave considerable vertical structure within the remaining forest.

Uneven-aged management
Uneven-aged management (thinning, single-tree, group selection, and patch cuts) generally results in only moderate shifts in the bird community. Depending on harvest intensity, shrub-scrub birds (yellow-breasted chat, indigo bunting) colonize harvested sites and canopy or midstory species (Acadian flycatcher, wood thrush, summer tanager) may be reduced in abundance for a few years (1 to 4) post-harvest. However, the increase in understory vegetation that results from uneven-aged management will in the long-term increase the abundance of many high priority forest bird species (Kentucky warbler, Swainson's warbler, hooded warbler, white-eyed vireo). Nesting success of canopy and midstory nesting species may decline for the first 1 to 4 years, but nesting success is most likely improved compared to unharvested sites thereafter. Unfortunately, canopy gaps resulting from uneven-aged harvest may attract brown-headed cowbirds and result in increased nest parasitism. However, for most forest breeding species in bottomland hardwood forests, predation has a much greater impact on nesting success than does parasitism. As such, landscape context and forest fragmentation appear to have a greater influence on nesting success than does uneven-aged harvest.

From a management standpoint, at what harvest intensity does group selection harvest become a seed-tree or shelterwood harvest? Although little empirical data exist from which to draw, reduction of the overstory to less than 50 percent canopy cover most likely causes displacement of many forest birds and extensive colonization by shrub-scrub birds. At this harvest intensity, nest success of canopy and midstory nesting species most likely declines (at least for several years). However, failure to reduce the overstory to less than 80 percent canopy cover can result in only a slight increase in the forest understory and a minimal shift in the avian species composition. Limited invasion by shrub-scrub birds occurs, but only a negligible increase occurs in the abundance of high priority species that depend on the forest understory (Swainson's warbler, hooded warbler). A reduction of the forest overstory to 60 to 70 percent canopy cover can improve long-term habitat conditions, but not cause dramatic changes in the species composition with bottomland forests.

In a similar vein, at what area of harvest does a group selection cut become a small clearcut? Some evidence shows increased brood parasitism by brown-headed cowbirds near forest gaps as small as 0.2 hectare (50-meter diameter). However, within bottomland hardwood forest patches of less than 10,000 hectares, brown-headed cowbirds appear to be ubiquitous. Thus, within small forest patches, larger gap sizes most likely have little additional negative impact on breeding birds. Additionally, larger gap sizes (1 to 3 acres) may be essential for regeneration of shade-intolerant tree species (e.g., oaks). Mast from these tree species is important in the diet of many forest wildlife species, and their persistence within the forest is highly desirable. Thus, a small proportion (5% – 10%) of most forest management units should target their regeneration, even at the risk of slightly elevated rates of nest parasitism.

Uneven-aged harvest should reduce the total basal area to 70 to 90 square feet per acre (16 – 20 m^2/ha). Thinning to this basal area will most likely result in a canopy cover of between 50 and 70 percent. However, canopy cover of less than 60 percent should be avoided except within patches that target regeneration of shade-intolerant trees. Depending on the average diameter of unharvested trees, the remaining basal area may represent as few as 20 trees per acre (30-inch dbh trees thinned to 70 ft^2/acre), 200 trees per acre (9-inch dbh trees thinned to 90 ft^2/acre), or significantly more trees per acre if they are of smaller diameter. Goelz (1995) may be useful for planning timber harvests as he provides equations and figures for relating basal area to trees per acre. In general, thinning enhances wildlife habitat for priority species on any stand that is more than 100 percent stocked (minimum basal area ~100 ft^2/acre; but see Goelz [1995] for specifics).

Additionally, uneven-aged harvest should leave two to four trees per acres (5–10 trees/ha) of the largest diameter trees of species that are capable of emergent growth above the predominant forest canopy. When possible, several species should be included as residual trees. When present, residual species should include oaks (*Quercus* spp.), bald cypress (*Taxodium distichum*), cottonwood (*Populus deltoides*), and sweetgum (*Liquidambar styraciflua*). Large residual trees should have the potential to become canopy emergent trees. Residual trees should be identified before marking timber for harvest, and timber harvest used to encourage increased growth of residual trees.

The length of time between stand entries for harvest should be related to the intensity of the last harvest; that is, stands that are harvested more intensely should be allowed longer to recover before subsequent harvest. Because improved habitat conditions are likely to persist for more than 10 years after harvest, subsequent entry for additional harvest should not occur for at least 15 years. (However, if a return to pre-harvest bird populations is desired, an interval of 40 to 70 years between entries may be required.) Harvest should occur between August 1 and February 28. Disturbance should be minimized during the peak-breeding season—between April 1 and July 31. However, wet ground conditions often restrict access during late fall and winter. Thus, habitat improving timber harvests may be undertaken between March 1 and July 31 when the alternative is undertaking no habitat improvement actions.

Tree species importance

Evidence of avian dependence on specific tree species is sparse. Even so, some species, such as cypress, sycamore (*Platanus occidentalis*), sweetgum,

and willow (*Salix nigra*), indicate substantial use by birds. Most tree species exhibit unique phenologies of seasonal development. As such, they have different temporal development of flowering and fruiting. Additionally, trees attract different insects (primarily as hosts for insects that consume their leaves) at different times. Some insects are unique to specific trees species. Because most birds are insectivorous during the breeding season, maintaining a diversity of mature tree species likely buffers against "boom and bust" cycles in the insect forage base available to birds. Therefore, all naturally occurring canopy tree species should be allowed to develop without prejudice. Harvest should likewise be undertaken to ensure floristic diversity within the forest midstory and understory. Even so, small changes in the species composition of bottomland hardwood forests have little effect on the avian community because the high natural diversity of these forests buffers against change. We caution against the tendency to harvest primarily trees of higher economic value. Similarly, managers should not favor development of specific species based solely on their economic value at harvest.

Special considerations

Cavities within standing dead trees are important to many birds. Trees containing cavities and unsound cull trees that will most likely develop cavities should be left uncut within harvested stands. (Note: trees classified as cull because of merchantable defects other than unsoundness may be cut to improve timber quality as part of the overall timber harvest). Care should be taken to minimize damage to cavity trees during harvest and removal operations. When available, four to six cavity trees (or unsound culls) per acre should remain after thinning.

Some nonwoody vegetation has been associated with increased levels of avian activity. When present in forest stands to be harvested, timber should be marked to minimize damage to and encourage proliferation of cane (*Arundinaria* spp.) and Spanish moss (*Tillandsia usneoides*). Creation of gaps surrounding cane patches may encourage their development by providing additional sunlight. Management actions to encourage expansion of Spanish moss are unknown.

Literature summaries

Australian hardwood forests

Species richness and abundance of birds declined by 58 and 98 percent, respectively, following clearcut harvest. After 14 years, they were still 17 and 55 percent below previous levels. Richness returned to levels comparable to old-growth after 30 to 50 years, abundance required about 70 years to recover (Williams et al. 2001). Shelterwoods that retained 30 to 50 percent of the canopy resulted in reduced abundance of forest birds (Taylor and Haseler 1995). A few species increased in abundance, but some were extirpated.

Northern hardwood-coniferous forest

In a predominately forested landscape, on 30 to 50 hectare plots, nesting mortality was greater near clearcut edges (<300 m) for ground nesting birds than at more than 600 meters from edge (Manolis et al. 2000). Distance to edge was the best indicator of nesting success for ground nests of ovenbird. However, higher nests of least flycatcher and red-eyed vireo were not impacted by distance to clearcut edges. Cowbird parasitism was low (2.6%). Artificial nests near clearcut edges (<10 m) were depredated more than those at a distance (>200 m) from clearcut edges. In summarizing seven studies of how nesting success or pairing success was impacted by distance to clearcut edge, Manolis et al. (2000) found differences only for ground nesting species, specifically ovenbird, but not for shrub and canopy nesters. In summarizing 19 studies that examined the impact of edges using artificial nests, 11 reported negative edge effects. Overall, the evidence of decline in nesting success associated with edges is relative to decreased nest success of ovenbirds, a widespread species of low priority for management. Furthermore, King et al. (1996) and Thompson et al. (2000) suggest that the overall bird populations are not reduced despite lowered nesting success along edges.

Deciduous scrub oak forest

Yahner (2000), in a study of even-aged harvest of scrub oak in Pennsylvania, found nesting success increased over time as stands recovered from clearcut harvest.

Eastern and southern upland forests
Duguay et al. (2000) found nesting success greater in unharvested stands than in either clearcut or in 2-aged harvested stands (15 years post-harvest). Conversely, Duguay et al. (2001) reported nest survival did not differ with varying distances from the edge of harvested stands. Nests of wood thrush, veery, rose-breasted grosbeak, and red-eyed vireo were unaffected by timber harvest.

Thompson et al (2000) stated that in southern forests, artificial nests fail to measure predation by snakes, one of the most important predators. Thus, artificial nest studies may be biased. Changes in abundance of forest birds clearly occurred in response to timber harvest. For example, yellow-breasted chat, indigo bunting, and prairie warbler all increased in recently clearcut stands, whereas red-eyed vireo and wood thrush were more numerous in mature unharvested forests. In upland hardwoods, hooded warbler and Kentucky warbler were more abundant in selectively cut (uneven-aged management) stands, whereas densities of worm-eating warbler and ovenbird declined following uneven-aged treatment.

Uneven-aged harvest promoted increased abundance of some species (eastern wood peewee, red-eyed vireo, summer tanager, and worm-eating warbler) whereas other species (pine warbler, ovenbird, scarlet tanager, yellow-billed cuckoo, and wood thrush) declined in abundance (E. Annand and F. Thompson, unpublished; Thompson et al. 1995). Uneven-aged harvest may promote brood parasitism by brown-headed cowbird.

Southern bottomland forests
From 1992 to 1994, Ouchley (1996) assessed avian survivorship and nesting success at four bottomland forests sites in Louisiana. Two sites in the Tensas Basin were in an approximate 4,000 hectare tract: one site was older-growth (last harvest circa 50 years ago) whereas the other was subjected to selection (diameter-cut) harvest about 10 years earlier (early 1980's). The other two sites were younger forests in the Atchafalya Basin. One site was in a 20,000 hectare forest tract that had sustained 40 percent tree damage from a hurricane in August 1992. The last site was in a 100,000 hectare forest tract that was relatively undamaged by the hurricane. Tract sizes are confounded with geographic location and treatments (harvest and hurricane damage) were unreplicated.

From 1994 to 1997, Twedt et al. (1999) assessed avian abundance on 13 bottomland forest plots (6 mixed species bottomland hardwood sites in Louisiana and 7 cottonwood plantations in Mississippi). Nesting success was evaluated on eight of these sites (Twedt et al. 2001). The mixed species bottomland hardwood sites were all within a single 9,000 hectare forest tract. Three of the six bottomland hardwood sites were subjected to uneven-aged timber harvest that reduce canopy cover by about 20 percent and removed about 30 percent of the trees that were more than 10 centimeters dbh. Although unique habitats, structurally, cottonwood plantations resemble bottomland hardwood stands regenerating after even-aged harvest. This is particularly true for cottonwood stands that were coppiced following an even-aged harvest. Within the same 9,000 hectare bottomland hardwood forest tract and another 25,000 hectare forest tract, Lind (1998) assessed the effect of forest edge versus forest interior on nesting success of birds.

Hurst and Bourland (1996) examined bird abundance with respect to clearcut harvests (with and without residual trees) within a 24,000 hectare bottomland hardwood forest tract in Mississippi. Cooper and his colleagues (Cooper 2001) compared two timber harvest techniques (single-tree selection and patch cuts) with unharvested forest within a single large forest tract along the White River, Arkansas.

Abundances of some high priority forest birds, such as Acadian flycatcher, prothonotary warbler, Swainson's warbler, cerulean warbler, wood thrush, red-eyed vireo, hooded warbler, and Kentucky warbler, were reduced by timber harvest. Conversely, abundances of other high priority bird species, such as white-eyed vireo, eastern wood peewee, yellow-breasted chat, and red-headed woodpecker, increased following uneven-aged harvest. Overall nesting success (all species combined) appears to be initially reduced by uneven-aged harvest, at least for a few years after harvest. Decreased nesting success is most likely transitory, returning to pre-harvest levels within 10 years. Proximity to forest edges had little effect on nesting success. Annual survival of birds (i.e., return rate) was reduced by reduction in timber volume.

Parasitism has generally been overshadowed by the effects of predation within southern bottomland hardwood forests. Within the Mississippi Alluvial Valley (MAV), overall parasitism rates have ranged from 9 to 20 percent. However, increased parasitism has been noted near edges (25 – 55%), and very high rates have been noted for some species (white-eyed vireo 86%).

Species-specific assessments

Acadian flycatcher—negatively or neutrally impacted by timber harvest
Abundance reduced by uneven aged harvest. Nesting success in small (4,000 ha) tracts (<7%) 10 years post timber harvest was similar to unharvested sites. Nesting success in midsized tracts (9,000 ha) was reduced from 32 to 11 percent during first 2 years after timber harvest and nesting success was reduced by proximity to forest edge (24% in interior, 13% near edge). In large tracts (>20,000 ha), hurricane damage reduced success from 43 percent to only 12 percent and reduced number of fledglings. However, Cooper (2001) was unable to detect any affect of timber harvests on nesting success because of high annual variation (5–36%). Annual variation in nesting success on unharvested sites within a 60,000 hectare tract ranged from 10 to 25 percent (Wilson 1997).

White-eyed vireo—Positively impacted by timber harvest
Nesting success in small tract was poor (<2%), but better and with more young after timber harvest. In midsized tracts, nesting success was greater (35%) near forest edges than in forest interior (17%). In larger tracts, nesting success was 17 to 19 percent. The number of young fledged was greater after hurricane damage. Abundance measured by captures increased linearly for 10 years post-harvest.

Prothonotary warbler—No influence by timber harvest
Effects of uneven-aged timber harvest are most likely secondary to landscape and local habitat conditions (e.g., water and cavities). In small tracts, nesting success was 3 percent in areas that had not been harvested and 8 percent following harvest. In larger tracts, nesting success was 30 to 32 percent. Nest success in artificial cavities within cottonwood plantations was 44 percent. More young fledged per nest (3.0) in cottonwood plantations than on larger bottomland hardwood tracts (2.1) or on smaller bottomland hardwood tracts (1.3).

Northern cardinal—Relatively unaffected by uneven-aged timber harvest
No differences detected in nesting success or number of young fledged because of tract size or reduction in timber volume. Nesting success at forest edge (24%) similar to that in forest interior (30%).

Carolina wren—Unaffected or positively affected by uneven-aged timber harvest
Higher nesting success and more young fledged per nest following a reduction in timber volume (both harvest and hurricane). Nesting success at forest edges and interior similar (about 34%). Increased capture rates more than 5 years post-harvest.

Ruby-throated hummingbird—Somewhat positively affected by uneven-aged timber harvest
Greater abundance, higher nesting success, and more young fledged per nest following a reduction in timber volume. Nesting success at forest edges and interior similar (about 52%).

Hooded warbler—Positively affected by uneven-aged timber harvest
Increased capture rates more than 5 years post-harvest.

Indigo bunting—Positively affected by uneven-aged timber harvest.
Increased capture rates between 1 and 7 years post-harvest.

Yellow-breasted chat—Positively affected by uneven-aged timber harvest.
Increased capture rates between 1 and 7 years post-harvest.

Guidelines for landscape level issues for nongame birds

Landscape considerations

Within-stand considerations are important for providing basic wildlife needs of food, cover, water, and space. Management favoring different habitat features on the same property supports different groups of wildlife species. Many species, however, are more dependant on broader habitat conditions including those on the remainder of the property as well as surrounding properties. Some groups (species) of wildlife require large areas of similar habitat. Sometimes having too much habitat diversity on one property results in the loss of some wildlife species targeted for management even when within-stand considerations are being met. Placing stand management recommendations in context with land uses within and surrounding the property under consideration can minimize loss or reduction of favored wildlife species.

The term *fragmentation* often is used by biologists to describe the effects of surrounding land use patterns on wildlife occurring within a specific property, especially when a variety of land uses are in evidence. Ecologists and wildlife managers still debate how these terms can be applied for managing wildlife at the local level. Simply stated, many species (particularly birds) appear to have thresholds on the acreage of appropriate habitat necessary for supporting healthy populations. Below this threshold a species may still occur, but not as a healthy population, or the species may disappear altogether although within-stand habitat requirements are seemingly being met. The reason for decline of many species with decreasing habitat patch size is not fully understood, but increasing numbers and efficiency of predators and parasites are probable culprits. For nonmigratory species, smaller and isolated habitat patches may not be able to support large enough populations for all species to persist over many years, especially if immigration from other habitat patches is restricted.

The problem is that different species appear to have different patch size thresholds even within a specific habitat. Some species associated with mature forests, particularly birds in hardwoods, may be lost from or suffer low reproductive success within habitat patches smaller than 10,000 acres within fragmented landscapes. Other area-sensitive species may persist and have moderate to high reproductive success in patches larger than 500 acres. Many grassland and shrub-scrub birds may also be area-sensitive, but the threshold appears to be 40 to 100 acres for the most sensitive species. Grassland and shrub-scrub species are better adapted to frequent disturbance and perhaps greater levels of depredation and nest parasitism than most mature forest species. Other animals and plants may exhibit area-sensitivity, but the best data exists for birds when assessing opportunities on managed lands in context with the surrounding landscape.

A question frequently asked is whether landscapes dominated by active forestry results in the same kind of problems for area-sensitive bird species using isolated habitats as in landscapes dominated by agriculture or urban/suburban development. The answer appears to be no. Largely forested landscapes, including areas where harvesting of timber is widespread and frequent, do not show the same frequency of reproductive failure among area-sensitive forest birds when compared to isolated woodlands in agricultural or suburban dominated landscapes. In highly managed forested landscapes, the issues affecting the health and make up of wildlife communities is more closely tied to habitat quality and quantity within stands.

The concept of edge effect has had a long history in wildlife management circles based on the principles first described by Aldo Leopold. Where two habitats or successional stages meet, vegetation mixes. This generally makes the edges richer in food resources and provides important protective cover that is not available on either side of the edge. The concept of edge has been particularly important for managing game species. Recently, however, continuous emphasis about the benefits of creating edge habitat for wildlife has come into question as popularity of Neotropical migratory birds has reached alltime heights. Many species of Neotropical migratory birds

have low reproductive success near edge habitats that appear to concentrate the negative effects of nest predators and brown-headed cowbirds. However, many species susceptible to problems along edges are in fact most commonly observed along edges, therefore presenting a paradox. Recent research suggests the issue is not whether edge is bad or good, but should additional edge be established if the management objective is to maintain healthy populations of species susceptible to problems associated with excessive edge.

What constitutes excessive edge varies from species to species. However, some consistent patterns emerge. In landscapes that are largely forested, establishing edge appears to be neutral to beneficial for most mature forest bird species as long as mature forest characteristics are maintained in ample supply to support healthy populations. Some mature forested bird species, described as area sensitive, are often most abundant along edges and may feed or nest in adjacent early successional habitat. The key in these situations is that the edge and early successional habitat is being established within a largely mature forested landscape where predators and cowbirds are not as concentrated or absent. This is not the case in isolated forest patches smaller than 10,000 acres. In these areas attention must be given to minimizing the negative effects of edge establishment if management is for area-sensitive birds. As yet, no concise cookbook is available to follow, but some general guidelines are helpful when developing management plans.

More detail

Defining landscape context for area-sensitive species

A useful breakdown of landscape categories may help determine whether fragmentation and associated problems should be considered in the development of a management plan for a specific property where forest management is the primary land use. The following landscape categories are based on work by Drs. Scott Robinson, Frank Thompson, and John Faaborg, and their colleagues from the Midwest.

1. Largely forested regions (Ozarks, Northern Cumberland Plateau, Southern Blue Ridge)—Ask whether the area encompassed within a circle with a 6-mile radius from the center of the property under consideration (or about 75,000 acres) has more than 70 percent of all cover types classified as forested (regardless of successional stage). If the area is more than 70 percent forested, consideration of landscape effects on wildlife management become progressively less important as the percentage of forested land use increases.

2. Landscape with between 50 and 70 percent of all cover types classified as forested (East Gulf Coastal Plain, Southern Piedmont)—Landscape effects within a 6-mile radius of a mostly forested property may (more likely for hardwood species) or may not (more likely for pine species) be important in deciding the best strategy for developing a wildlife management plan. In other words, deciding whether to consider external landscape effects in developing a wildlife management plan for a specific property probably depends on the stated objectives of the manager or owner of the property and what forest types are being managed.

3. Landscapes with less than 50 percent of all cover types classified as forested (Southern Ridge and Valley, Shawnee Hills, Mississippi Alluvial Plain)—Developing a wildlife management plan for a specific property cannot be accomplished for many species without consideration of the potential problems associated with habitat fragmentation. There are nevertheless management options, at least for nongame birds in hardwood forests, for discrete forest patches of various size categories:

a. Macrosites where between 85 and 95 percent of the area is forested (reproductive success for area-sensitive species is good to excellent, with some species progressively more successful in the larger forested patches):
   - Over 50,000 acres (like 1 above)
   - 25,000 to 50,000 acres (like 2 above)
   - 10,000 to 25,000 acres (the absolute smallest patch sizes are in this range for species most highly susceptible to nest depredation and parasitism).

b. Mesosites where 85 to 95 percent of area is forested (above a minimum size a number of species moderately susceptible to problems can have reasonably high breeding success; the larger the patch the higher the breeding success):
   - 10,000 to 25,000 acres (particularly good for Kentucky warblers, worm-eating warblers, Acadian flycatchers; marginally good for wood thrush, both tanagers, hooded warbler, yellow-throated vireo)
   - 5,000 to 10,000 acres
   - 2,000 to 5,000 acres
   - 500 to 2,000 acres

c. Microsites where 85 to 95 percent of area is forested (some area-sensitive birds may be present, but reproductive success is likely to be low; many other breeding species will be absent):
   - Less than 500 acres

The key to areas falling under category 3b is to develop management plans that help to consolidate forested patches into the next highest size category if possible or avoid dropping a forest patch into the next lowest category. For areas in category 3c, focusing on area-sensitive species may not be fruitful other than to investigate opportunities to increase patch size by reforestation or consolidation to a patch size between 500 and 2,000 acres. For forested patches less than 500 acres, important habitat still can be provided for many resident and wintering bird and game species, and, most importantly, attention to fleshy fruit producing plants can be essential for birds during migration. Properties under consideration of less than 100 acres to more than 1,000 acres can still be important for area-sensitive breeding birds as long as forested habitat is contiguous with that on adjacent properties.

References

Alterman, L.E. 2002. Nesting success and postfledging survival of Neotropical migratory birds in the Ouachita Mountains of Arkansas. Masters thesis, Arkansas State University, Jonesboro, AR, 115 p.

Anderson, S.H., and H.H. Shugart. 1974. Habitat selection of breeding birds in an east Tennessee deciduous forest. Ecology 55:828-837.

Annand, E.M., and F.R. Thompson, III. 1997. Forest bird response to regeneration practices in central hardwood forests. Journal of Wildlife Management 61:159-171.

Anonymous. 1988. Clearcutting: Effects on the forest environment, Tombigbee and Black Warrior River Basins, Alabama and Mississippi. Report prepared for the Department of the Army Mobile District, Corps of Engineers, Mobile, AL. Contract no. DACW 01-87-C-0140.

Askins, R.A. 2001. Sustaining biological diversity in early successional communities: the challenge of managing unpopular habitats. Wildlife Society Bulletin 29:407-412.

Atlegrim, Ola, and Kjell Sjoberg. 1995. Effects of clearcutting and selective felling in Swedish Boreal coniferous forest: response of invertebrate taxa eaten by birds. Entomol. Fennica 6:79-90.

Bancroft, G.T., A.M. Strong, and M. Carrington. 1995. Deforestation and its effects on forest-nesting birds in the Florida Keys. Conservation Biology 9:835-844.

Barber, D.R., T.E. Martin, M.A. Melchiors, R.E. Thill, and T.B. Wigley. 2001. Nesting success of birds in different silvicultural treatments in Southeastern U.S. pine forests. Conservation Biology 15:196-207.

Barber, J.D., E.P. Wiggers, and R.B. Renken. 1998. Nest-site characterization and reproductive success of Mississippi kits in the Mississippi River floodplains. Journal of Wildlife Management 62:1373-1378.

Barrow, W.C. Jr. 1990. Ecology of small insectivorous birds in a bottomland hardwood forest. Ph.D. dissertation, Louisiana State University, Baton Rouge, LA, 212 p.

Bayne, E.M., and K.A. Hobson. 1997. Comparing the effects of landscape fragmentation by forestry and agriculture on predation of artificial nests. Conservation Biology 11:1418-1429.

Bourque, J., and M. Villard. 2001. Effects of selection cutting and landscape-scale harvesting on the reproductive success of two Neotropical migrant bird species. Conservation Biology 15:184-195.

Brand, L Arriana, and George T Luke. 2000. Predation risks for nesting birds in fragmented coast redwood forest. Journal of Wildlife Management 64:42-53.

Bratton, S.P. 1994. Logging and fragmentation of broadleaved deciduous forests: Are we asking the right ecological questions? Conservation Biology 8:295-297.

Brawn, J.D. 1979. The relationship of cavity nesting birds to snags in the oak-hickory forest. Masters thesis, University of Missouri, Columbia, MO, 151 p.

Brawn. J.D., and S.K. Robinson. 1996. Source-sink population dynamics may complicate the interpretation of long-term census data. Ecology 77:3-12.

Brittingham, M.C., and S.A. Temple. 1983. Have cowbirds caused forest songbirds to decline? BioScience 33:31-35.

Buffington, J.M., J.C. Kilgo, R.A. Sargent, and others. 1997. Comparison of breeding bird communities in bottomland hardwood forests of different successional stages. Wilson Bulletin 109:314-319.

Campi, Monica J., and Ralph MacNally. 2001. Birds on edge: avian assemblages along forest-agricultural boundaries of central Victoria, Australia. Animal Conservation 4:121-132.

Carter, M.F., W.C. Hunter, D.N. Pashley, and K.V. Rosenberg. 2000. Setting conservation priorities for landbirds in the U.S.: the Partners In Flight approach. Auk 117:541-548.

Christian, Donald P., Joann M Hanowski, Marlys Reuvers-House, and others. 1996. Effects of mechanical strip thinning of aspen on small mammals and breeding birds in northern Minnesota, U.S.A. Canadian Journal of Forest Research 26:1284-1294.

Cieslak, M. 1994. The vulnerability of breeding birds to forest fragmentation.

Conner, R.N., and J.G. Dickson. 1997. Relationships between bird communities and forest age, structure, species composition, and fragmentation in the West Gulf Coastal Plain. Texas Journal of Science 49:123-138.

Conner, R.N., S.D. Jones, and G.D. Jones. 1994. Snag condition and woodpecker foraging ecology in a bottomland hardwood forest. Wilson Bulletin 106:242-257.

Cooper, R.J. 2001. Forest management and breeding birds. Final report submitted to USGS Biological Resources Division under Cooperative Agreement No. 1434-HQ-97-RU-01551 (unpublished).

Cooper-Ellis, S., D.R. Foster, G. Carlton, and A. Lezberg. 1999. Forest response to catastrophic wind: results from an experimental hurricane. Ecology 80:2683-2696.

Daniel, R.S., and R.R. Fleet. 1999. Bird and small mammal communities of four similar-aged forest types of the Caddo Lake area in east Texas. Texas Journal of Science 51:65-80.

Darveau, M., L Belanger, J. Huot, E. Melancon, and S. DeBellefeuille. 1997. Forestry practices and the risk of bird nest predation in a boreal coniferous forest. Ecological Applications 7:572-580.

DeGraaf, R.M. 1992. Effects of even-aged management on forest birds at northern hardwood stand interfaces. Forest Ecology and Management 47:95-110.

DeGraaf, R.M., W.M. Healy, and R.T. Brooks. 1991. Effects of thinning and deer browsing on breeding birds in New England oak woodlands. Forest Ecology and Management 41:179-192.

Dickson, J.G. 1974. Seasonal bird populations and vertical distribution of birds in a south central Louisiana bottomland hardwood forest. Ph.D. dissertation, Louisiana State University, Baton Rouge, LA, 132 p.

Dickson, J.G. 1978. Forest bird communities of the bottomland hardwoods. Management of southern forests for nongame birds. USFS, p. 66-73.

Dickson, J.G. 1979. Seasonal populations of insectivorous birds in a mature bottomland hardwood forest in south Louisiana. The Role of Insectivorous Birds in Forest Ecosystems (book), p. 261-268.

Dickson, J.G. 1991. Birds and mammals of pre-colonial southern old-growth forests: Natural Areas Journal 11:26-33.

Dickson, J.G., J.H. Williamson, R.N. Conner, and others. 1995. Streamside zones and breeding birds in eastern Texas. Wildlife Society Bulletin 23:750-755.

Dickson, James G., and Robert E. Noble. 1978. Vertical distribution of birds in a Louisiana bottomland hardwood forest. Wilson Bulletin 90:19-30.

Dijak, W.D., and F.R. Thompson, III. 2000. Landscape and edge effects on the distribution of mammalian predators in Missouri. Journal of Wildlife Management 64:209-216.

Donovan, T.M., F.R. Thompson, J. Faaborg, and others. 1995. Reproductive success of migratory birds in habitat sources and sinks: Conservation Biology 9:1380-1395.

Donovan, T.M., P.W. Jones, E.M. Annand, F.R. Thompson III. 1997. Variation in local-scale edge effects: mechanisms and landscape context. Ecology 78:2064-2075.

Donovan, T.M., R.H. Lamberson, A. Kember, F.R. Thompson III, and J. Faaborg. 1995. Modeling the effects of habitat fragmentation on source and sink demography of neotropical migrant birds. Conservation Biology 9:1396-1407.

Duguay, J.P., P.B. Wood, and G.W. Miller. 2000. Effects of timber harvests on invertebrate biomass and avian nest success. Wildlife Society Bulletin 28:1123-1131.

Duguay, J.P., P.B. Wood, and J.V. Nichols. 2001. Songbird abundance and avian nest survival rates in forests fragmented by different silvicultural treatments. Conservation Biology 15:1405-1415.

Faaborg, J., M. Brittingham, T.M. Donovan, and J. Blake. 1995. Habitat fragmentation in the temperate zone. *In* T.E. Martin and D.M. Finch, eds., Ecology and management of Neotropical migratory birds: a synthesis and review of critical issues. Oxford University Press, New York, NY, p. 357-380.

Farnsworth, G.L., and T.R. Simons. 1999. Factors affecting nesting success of wood thrushes in Great Smoky Mountains National Park. Auk 116:1075-1082.

Freemark, K.E., J.B. Dunning, S.J. Hejl, and J.R. Probst. 1995. A landscape ecology perspective for research, conservation, and management. *In* T.E. Martin and D.M. Finch, eds., Ecology and management of Neotropical migratory birds: a synthesis and review of critical issues, Oxford University Press, New York, NY, p. 381-427.

Fuller, C.M. 1998. Some effects of a timber harvest on the productivity of birds breeding in a Louisiana bottomland hardwood forest. M.S. thesis, Louisiana State University, Baton Rouge, LA, 69 p.

Garner, G.W. 1969. Short-term succession of vegetation following habitat manipulation of bottomland hardwoods for swamp rabbits in Louisiana. M.S. thesis, Louisiana State University, Baton Rouge, LA, 138 p.

Gath, R.E. 1964. The ecology of Spanish moss (Tillandsia usneoides): its growth and distribution. Ecology 45:470-481.

Goelz, J.C.G. 1995. A stocking guide for southern bottomland hardwoods. Southern Journal of Applied Forestry 19:103-104.

Haas, C.A. 1995. Dispersal and use of corridors by birds in wooded patches on agricultural landscape. Conservation Biology 9:845-854.

Hamel, Paul B. 1992. Land manager's guide to the birds of the south. The Nature Conservancy, Atlanta, U.S. Forest Service, Southern Region, Chapel Hill, NC, 367 p.

Hanski, I.K., T.J. Fenske, and G.J Niemi. 1996. Lack of edge effect in nesting success of breeding birds in managed forest landscapes. Auk 113:578-585.

Hartley, M.J., and M.L. Hunter, Jr. 1998. A meta-analysis of forest cover, edge effects, and artificial nest predation rates. Conservation Biology 12:465-469.

Haveri, Bruce A., and A.B. Carey. 2000. Nongame avifauna—forest management strategy, spatial heterogeneity and winter birds in Washington. Wildlife Society Bulletin 28:643-652.

Hayden, T., J. Faaborg, and R.L. Clawson. 1985. Estimates of minimum area requirements for Missouri forest birds. Transactions of the Missouri Academy of Science 19:11-22.

Heckert, J.R., R.E. Szafoni, V.M. Kleen, and others. 1993. Habitat establishment, enhancement, and management for forest and grassland birds in Illinois. Illinois Department of Conservation, Springfield, IL, 20 p.

Herkert, James R., Robert E Szafoni, Vernon M. Kleen, and John E. Schwegman. 1993. Habitat establishment, enhancement, and management for forest and grassland birds in Illinois. Available at Northern Prairie Wildlife Research Center home page: http://www.npwrc.usgs.gov/resource/othrdata/manbook/manbook.htm.

Hill, G.E. 1998. Use of forested habitat by breeding birds in the Gulf Coastal Plain. Southern Journal of Applied Forestry 22:133-137.

Hunter, W.C., D.A. Buehler, R.A. Canterbury, J.L. Confer, and P.B. Hamel. 2001. Conservation of disturbance-dependent birds in eastern North America. Wildlife Society Bulletin 29:440-455.

Hunter, W.C., D.N. Pashley, and R.E.F. Escano. 1993. Neotropical migratory landbird species and their habitats of special concern within the southeast region. *In* D.M. Finch and P.W. Stangel, eds., Status and Management of Neotropical Migratory Birds, General Technical Report RM-229, Rocky Mountain Forest and Range Experiment Station, U.S. Forest Service, Fort Collins, CO, p. 159-171.

Hurst, G.A., and T.R. Bourland. 1996. Breeding birds on bottomland hardwood regeneration areas on the Delta National Forest. Journal of Field Ornithology 67:181-187.

Johnson, D., and E. Odum. 1956. Breeding bird populations in relation to plant succession in the Piedmont of Georgia. Ecology 37:50-62.

Karriker, K.S. 1993. Effects of intensive silviculture on breeding and wintering birds in North Carolina pocosins. M.S. thesis, North Carolina State University, Raleigh, NC, 217 p.

Keyser, Amber J., Geoffrey E. Hill, and Eric C. Soehren. 1998. Effects of forest fragment size, nest density and proximity to edge on the risk of predation to ground-nesting passerine birds. Conservation Biology 12:986-994.

Kilgo, J.C., K.V. Miller, and W.P. Smith. 1999. Effects of group-selection timber harvest in bottomland hardwoods on fall migrant birds. Journal of Field Ornithology 70:404-413.

Kilgo, J.C., R.A Sargent, K.V Miller, and B.R. Chapman. 1996. Effects of riparian width on Swainson's warbler abundance. *In* K.M. Flynn, ed., Proceedings of the Southern Forested Wetlands Ecology and Management Conference, March 1996, Clemson University, Clemson, SC, p. 177-180.

King, D.I., C.R. Griffin, and R.M. Degraaf. 1996. Effects of clearcutting on habitat use and reproductive success of the ovenbird in forested landscapes. Conservation Biology 10:1380-1386.

King, D.I., C.R. Griffin, and R.M. DeGraaf. 1997. Effect of clearcut borders on distribution and abundance of forest birds in northern New Hampshire. Wilson Bulletin 109:239-245.

King, D.I., R.M. DeGraaf, and C.R. Griffin. 2001. Productivity of early successional shrubland birds in clearcuts and groupcuts in an eastern deciduous forest. Journal of Wildlife Management 65:345-350.

King, S.L., W. Barrow, T. Spengler, and B. Keeland. 1996. Canopy gap/avian relationship in bottomland hardwoods of the Cache River, Arkansas. In K.M. Flynn, ed., Proceedings of the Southern Forested Wetlands Ecology and Management Conference, March 1996, Clemson University, Clemson, SC, p. 182.

Knutson, M.G. 1995. Birds of large floodplain forests: Local and regional habitat associations on the Upper Mississippi River. Ph.D. dissertation, Iowa State University, Ames, IA, 121 p.

Kroodsma, R.L. 1987. Edge effect on breeding birds along power-line corridors in east Tennessee. The American Midland Naturalist 118:275-283.

Law, J.R., and C.G. Lorimer. 1989. Managing uneven-aged stands. *In* F.B. Clark and J.G. Hutchinson, eds., Central hardwood notes. North Central Forest Experimental Station, St. Paul, MN, p. 6.080-6.086.

Lee, D.M. 1991. Density of natural cavities suitable for nesting wood ducks in baldcypress and tupelo gum stands. M.S. thesis, Mississippi State University, MS, 51 p.

Lee, D.S. 1987. Breeding birds of Carolina bays: succession-related density and diversification on ecological islands. Chat 51:85-102.

Leonard, D.L., Jr. 1994. Avifauna of forested wetlands adjacent to river systems in central Florida. Florida Field Naturalist 22:97-105.

Lind, J.W. 1998. A comparison of nest success between forest edge and interior habitats: Data from natural and artificial songbird nests. Masters thesis, Louisiana State University, Baton Rouge, LA, 52 pp.

Lindenmayer, D.B. 1994. Wildlife corridors and the mitigation of logging impacts on fauna in wood-production forests in Southeastern Australia: a review. Wildlife Research 21:323-340.

MacNally, R.C. 1995. On large-scale dynamics and community structure in forest birds: Lessons from some eucalypt forests of southeastern Australia. Philosophical Transactions of the Royal Society of London B Biological Sciences, p. 369-379.

Mannan, R. William, E. Charles Meslow, and Howard M. Wight. 1980. Use of snags by birds in Douglas-fir forests, western Oregon. Journal of Wildlife Management 44:787-797.

Manolis, J.C., D.E. Anderson, and F.J. Cuthbert. 2000. Patterns in clearcut edge and fragmentation effect studies in northern hardwood-conifer landscapes: retrospective power analysis and Minnesota results. Wildlife Society Bulletin 28:1088-1101.

Martin, T.E. 1992. Landscape considerations for viable populations and biological diversity. Transactions North American Wildlife Natural Resources Conference 57:283-291.

Martin, T.E., and G.R. Geupel. 1993. Nest-monitoring plots: methods for locating nests and monitoring success. Journal of Field Ornithology 64:507-519.

Marzluff, J.M., M.G. Raphael, and R. Sallabanks. 2000. Understanding the effects of forest management on avian species. Wildlife Society Bulletin 28:1132-1143.

Maurer, B.A., L.B. McArthur, and R.C. Whitmore. 1981. Effects of logging on guild structure of a forest bird community in West Virginia. American Birds 35:11-13.

McCombs, W.C., and R.C. Noble. 1980. Small mammal and bird use of some unmanaged and managed forest stands in the mid-South. Proceedings of the Southeastern Association of Fish and Wildlife Agencies Annual Conference 34:482-491.

Meadows, J.S., and J.A. Stanturf. 1997. Silvicultural systems for southern bottomland hardwood forest. Forest Ecology and Management 90:127-140.

Mitchell, L.J. 1989. Effects of clearcutting and reforestation on breeding bird communities of baldcypress-tupelo wetlands. M.S. thesis, North Carolina State University, Raleigh, NC. 92 p.

Mitchell, L.J., and R.A. Lancia. 1990. Breeding bird community changes in a baldcypress-tupelo wetland following timber harvesting. Proceedings of the Southeastern Association of Fish and Wildlife Agencies Annual Conference 44:189-201.

Moore, F.R., S.A. Gauthrewux, Jr., P. Kerlinger, and others. 1993. Stopover habitat: management implications and guidelines. *In* D.M. Finch and P.W. Stangel, eds., Status and management of Neotropical migratory birds, USDA Forest Service, Rocky Mountain Forest and Range Experiment Station, Ft Collins, CO, p. 58-69.

Moorman, C.E. 1999. Relationships between artificially created gaps and breeding birds in a South Carolina bottomland forest. Ph.D. dissertation, Clemson University, Clemson, SC, 106 p.

Morse, S.F., and S.K. Robinson. 1999. Nesting success of a Neotropical migrant in a multiple-use, forested landscape. Conservation Biology 13:327-337.

Murray, L.A. 1992. Habitat use by nongame birds in central Appalachian riparian forests. M.S. thesis, Virginia Polytechnic Institute and State University, Blacksburg, VA, 140 p.

Noss, R.F. 1988. Effects of edge and internal patchiness on habitat use by birds in a Florida hardwood forest. Ph.D. dissertation, University of Florida, Gainesville, FL, 117 p.

Ouchley, K. 1996. Breeding ecology of songbirds in bottomland hardwood forests of Louisiana. Ph.D. dissertation, Louisiana State University, Baton Rouge, LA, 183 p.

Paton, P.W.C. The effect of edge on avian nest success: how strong is the evidence? Conservation Biology 8:17-26

Perry, R.W., R.E. Thill, D.G. Peitz, and P.A. Tappe. 200. Effects of different silvicultural systems on initial soft mast production. Wildlife Society Bulletin 27:915-923.

Petit, L.J., D.R. Petit, and T.E. Martin. 1995. Landscape-level management of migratory birds: looking past the trees to see the forest. Wildlife Society Bulletin 23:420-429.

Pettersson, R.B., J.P. Ball, K.E. Renhorn, and others. 1995. Invertebrate communities in boreal forest canopies as influenced by forestry and lichens with implications for passerine birds. Biological Conservation 74:57-63.

Ralph, C.J., G.R. Geupel, P. Pyle, T.E. Martin, and D.F. DeSante. 1993. Handbook of field methods for monitoring landbirds. USDA Forest Service, Pacific Southwest Research Station, Albany, CA, General Technical Report PSW-GTR-144.

Robbins, C.S. 1979. Effect of forest fragmentation on bird populations. Proceedings of the Workshop Management of Northcentral and Northeastern Forests for Nongame Birds, USDA Forest Service, General Technical Report NC-51.

Robbins, C.S., D.K. Dawson, and B.A. Dowell. 1989. Habitat area requirements of breeding forest birds of the middle Atlantic States. Wildlife Monograph 103:1-34.

Robinson, S.K., F.R. Thompson III, T.M. Donovan, D.R. Whitehead, and J. Faaborg. 1995. Regional forest fragmentation and the nesting success of migratory birds. Science 267:1987-1990.

Robinson, S.K., J.A. Gryzbowski, S.I. Rothstein, and others. 1993. Management implications of cowbird parasitism on neotropical migrant songbirds. *In* D.M. Finch and P.W. Stangel, eds., Status and Management of Neotropical Migratory Birds, USDA Forest Service, Rocky Mountain Forest and Range Experiment Station, Ft Collins, CO, p. 93-102.

Robinson, W.D., and S.K. Robinson. 1999. Effects of selective logging on forest bird populations in a fragmented landscape. Conservation Biology 13:58-66.

Rodewald, P.G., and K.G. Smith. 1998. Short-term effects of understory and overstory management on breeding birds in Arkansas oak-hickory forests. Journal of Wildlife Management 62:1411-1417.

Rodriguez, A., H. Andren, and G. Jansson. 2001. Habitat-mediated predation risk and decision making of small birds at forest edges. Oikos 95:383-396.

Rosenberg, K.V., R.W. Rohrbaugh, Jr., S.E. Barker, and others. 1999. A land manager's guide to improving habitat for scarlet tanagers and other forest-interior birds. Cornell Laboratory of Ornithology, Ithaca, NY, 24 p.

Rudis, V.A. 1993. Forest fragmentation of southern U.S. bottomland hardwoods. *In* J.C. Brissette, ed., Proceedings of the 7th Biennial Southern Silvicultural Research Conference, U.S. Dep. Agric. Forest Service, General Technical Report SO-93, p. 35-46.

Rudis, V.A., and R.A. Birdsey. 1986. Forest resource trends and current conditions in the lower Mississippi Valley. U.S. Dep. Agric. Forest Service, Research Bulletin SO-116, New Orleans, LA, 7 p.

Schreiber, B., and D.S. deCalesta. 1992. The relationship between cavity-nesting birds and snags on clearcuts in western Oregon. Forest Ecology and Management 50:299-9-316.

Schutz, J.P. 2001. Opportunities and strategies of transforming regular forests to irregular forests. Forest Ecology and Management 151:87-94.

Simons, T.R., G.L. Farnsworth, and S.A. Shriner. 2000. Evaluating Great Smoky Mountains National Park as a population source for the wood thrush. Conservation Biology 14:1133-1144.

Strelke, William K., and James G. Dickson. 1980. Effect of forest clear-cut edge on breeding birds in east Texas. Journal of Wildlife Management 44:559-567

Suarez, A.V., K.S. Pfennig, and S.K. Robinson. 1997. Nesting success of a disturbance-dependent songbird on different kinds of edges. Conservation Biology 11:928-935.

Suthers, H.B., J.M. Bickal, and P.G. Rodewald. 2000. Use of successional habitat and fruit resources by songbirds during autumn migration in central New Jersey. Wilson Bulletin 112:249-260.

Taylor, R.J., and M.E. Haseler. 1995. Effects of partial logging systems on bird assemblages in Tasmania. Forest Ecology and Management 72:131-149.

Temple, S.A. 1986. Predicting impacts of habitat fragmentation on forest birds: a comparison of two models. *In* J. Verner, M.L. Morrison, and C.J. Ralph, eds., Wildlife 2000: Modeling habitat relationships of terrestrial vertebrates, University of Wisconsin Madison, WI, p. 301-304.

Thompson, F.R., III, and E.K. Fritzell. 1990. Bird densities and diversity in clearcut and mature oak-hickory forest. UDSA Forest Service Research Paper NC-293, North Central Experiment Station, St. Paul, MN, 7 p.

Thompson, F.R., III, J.R. Probst, and M.G. Raphael. 1995. Impacts of silviculture: overview and management recommendations. *In* T.E. Martin and D.M. Finch, eds., Ecology and Management of Neotropical Migratory Birds: A Synthesis and Review of Critical Issues, Oxford University Press, New York, NY, p. 201-219.

Thompson, F.R., III, W.D. Dijak, T.G. Kulowiec, and D.A. Hamilton. 1992. Breeding bird populations in Missouri Ozark forests with and without clearcutting. Journal of Wildlife Management 56:23-30.

Thompson, F.R., III. 1993. Simulated response of a forest-interior bird population to forest management options in central hardwood forests of the United States. Conservation Biology 7:325-333.

Thompson, N.E. 1995. Clearcutting and breeding bird communities in a water tupelo-baldcypress wetland. M.S. thesis, North Carolina State University, Raleigh, NC, 130 p.

Thompson, R.F., III, J.D. Brawn, S.K. Robinson, J. Faaborg, and R.L. Clawson. 2000. Approaches to investigate effects of forest management on birds in eastern deciduous forests: How reliable is our knowledge? Wildlife Society Bulletin 28:1111-1122.

Twedt, D.J., and J.L. Henne-Kerr. 2001. Artificial cavities enhance breeding bird densities in managed forests. Wildlife Society Bulletin 29:680-687.

Twedt, D.J., J.L. Henne-Kerr, W.H. Tomlinson, and R.B. Hamilton. 1996. Preliminary estimates of avian density in intensively managed forests of the Mississippi Alluvial Valley. *In* Proceedings, The DELTA: Connecting points of View for Sustainable Natural Resources, August 1996, Memphis, TN, p. 111-119.

Twedt, D.J., R.R. Wilson, J.L. Henne-Kerr, and D.A. Grosshuesch. 2002. Avian response to bottomland hardwood reforestation: the first ten years. Restoration Ecology10(4):645-655.

Twedt, D.J., R.R. Wilson, J.L. Henne-Kerr, and R.B. Hamilton. 1999. Impact of bottomland hardwood forest management on avian densities. Forest Ecology and Management 123:261–274.

Twedt, D.J., R.R. Wilson, J.L. Henne-Kerr, and R.B. Hamilton. 2001. Nest survival of forest birds in the Mississippi Alluvial Valley. Journal of Wildlife Management 65:450-460.

Villard, M.A. 1998. On forest-interior species, edge avoidance, area sensitivity, and dogmas in avian conservation. Auk 115:801-805.

Villard, M.A., and P.D. Taylor. 1994. Tolerance to habitat fragmentation influences the colonization of new habitat by forest birds. Oecologia 98:393-401.

Wharton, C.H., W.M. Kitchens, E.C. Pendleton, and T.W. Sipe. 1982. The ecology of bottomland hardwood swamps of the southeast: a community profile. U.S. Fish and Wildlife Service, Washington, DC, FWS/OSB-81/37, 133 p.

Whitcomb, B.L., R.F. Whitcomb, and D. Bystrak. 1977. Island biogeography and “habitat islands” of eastern forest. Long-term turnover and effects of selective logging on the avifauna of forest fragments. American Birds 31:17-23.

Wigley, T.B., Jr., and T.H. Roberts. 1994. A review of wildlife changes in southern bottomland hardwoods due to forest management practices. Wetlands 14:41-48.

Wigley, T.B., Jr., and T.H. Roberts. 1997. Landscape-level effects of forest management on faunal diversity in bottomland hardwoods. Forest Ecology and Management 90:141-154.

Williams, M.R., I. Abbott, G.L. Liddelow, C. Vellios, I.B. Wheeler, and A. E. Mellican. 2001. Recovery of bird populations after clearfelling of tall open ecalypt forest in western Australia. Journal of Applied Ecology 38:910.

Wilson, R.R. 1997. Breeding biology of Acadian flycatchers in a bottomland hardwood forest. Masters thesis, University of Memphis, Memphis, TN, 138 p.

Yahner, R.H. 2000. Long-term effects of even-aged management on bird communities in central Pennsylvania. Wildlife Society Bulletin 28:1088-1101.

Yahner, Richard H. 1993. Effects of long-term forest clear-cutting on wintering and breeding birds. Wilson Bulletin 105:239-255.

Zarnowitz, J.E., and D.A. Manuwal. 1985. The effects of forest management on cavity-nesting birds in northwestern Washington. Journal of Wildlife Management 49:255-263.

Appendix 1 Forest Management Compatible Use Authorization Request Process

Purpose
To help field office personnel assist landowners requesting a compatible use authorization (CUA) for forest management activities on Wetlands Reserve Program (WRP) easements.

The emphasis of WRP is to protect, restore, and enhance the functions and values of wetland ecosystems. Special emphasis is given to the provision of habitat for migratory birds and wetland dependent wildlife, including threatened and endangered species. Additionally, WRP seeks to protect and improve water quality, attenuate water flows from flooding, recharge ground water, protect and enhance open space and aesthetic quality, protect native flora and fauna, contribute to the Nation's natural heritage, and contribute to educational and scientific scholarship.

The CUA process only considers activities that further the long-term protection and enhancement of the wetland and other natural values of the project area. All compatible uses will protect or enhance habitat for migratory birds or threatened and endangered species.

All forest management activities will enhance the objectives of the easement as found in the Wetlands Reserve Plan of Operations (WRPO). Harvest guidelines will be formulated on a regional or state basis.

Steps for evaluating a CUA request for forest management activities:

1. Identify landowner objectives for the requested management activities.
   - Habitat management
   - Control of invasive/nuisance species
   - Financial goals

2. Collect information on existing conditions relevant to program goals of habitat for migratory birds and threatened and endangered species.
   - Technical service provider* and/or multidiscipline team
   - Complete attached worksheet to determine habitat conditions for migratory birds

3. Compare existing conditions to target conditions.
   - See table 1.
   - Technical service provider* and/or multidiscipline team

4. Make recommendations for CUA (made by multidiscipline team).

5. Formulate prescription to achieve target wildlife habitat conditions, if warranted.
   - Technical service provider* and/or multidiscipline team participation (forester, biologist, F&WS, others).
   - Follow Field Office Technical Guide standards and specifications.
   - See Wetlands Reserve Program Forest Land Compatible Use Guidelines.
   - Follow state forestry Best Management Practices.

6. Submit to State Conservationist or designee for approval or denial of the compatible use authorization request.

*All technical service provider work will be reviewed by multidiscipline team.

Evaluation Form for Forest Management CUA Request

Plot Data

Contract #:_____ **Stand #:**_____* **Plot #:**_____

Overstory plot (radius + 32.24 ft) (10th acre plot) (Use angle gage or 10 factor prism)

Species	**DBH (inches)**				

Number of species present _____ Total basal area_____ ft^2/ac (total dbh × 10)

Percent hard mast species in stand _____%

Number of cavity trees > 4 inches_____

Percent canopy cover_____%

Number of den trees (unsound cull trees) present_____

Number of super emergent trees present_____

Percent stocking_____% *(use Goelz stocking table)*

Mid-story vines present_____(Y or N)

Canopy vines present_____ (Y or N)

Percent mid-story canopy_____% (stems > 11 feet in height to overstory canopy)

Percent understory canopy_____%

Percent ground cover_____%

Number of logs (>12 inches) present_____

Invasive or nuisance species present_____(Y or N)

Cane present_____(Y or N) Regeneration of hard mast species_____(Y or N) (11.8 feet radius plot)

**Minimum of three plots per stand = < 10 acres or > 10 acres = One plot per 10 acres up to 50 plots per stand*

10th Acre Plot Design

(37.24-foot radius plot with 11.8 feet nested regeneration subplot 15 feet from center of plot)

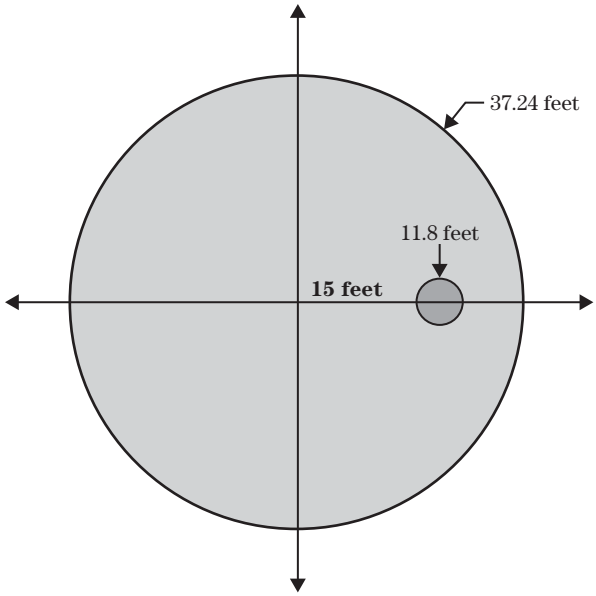

Table 1 Example target bottomland hardwood forest conditions for migratory birds in the Lower Mississippi Alluvial Valley

Target forest conditions	Conditions that may warrant management	Current site conditions
60% to 80% canopy cover	>90% canopy cover	_____ % canopy cover
Basal area 70 to 90 ft^2/acre	Basal area >100 ft^2/acre	Basal area _____ ft^2/acre
60% to 80% stocking	>100% stocking	_____ % stocking
No invasive or nuisance plant species present	Invasive or nuisance plant species present	Invasive or nuisance plant species present: **Y** or **N**
Regeneration of hard mast tree species (oaks and hickories) on 30% to 50% of inventory (cruise) plots	Regeneration of hard mast tree species (oaks and hickories) on <20% of inventory (cruise) plots	Regeneration of hard mast tree species (oaks and hickories) on ____ % of inventory (cruise) plots
Species diversity: 3 or more overstory tree species with 30% to 50% hard mast species composition	<3 overstory tree species present and/or less than 30% hard mast species composition	_____ overstory tree species present and ____ % hard mast species composition
Vines in overstory on 40% to 60% of inventory (cruise) plots	Vines in overstory on <30% of inventory (cruise) plots	Vines in overstory on ____ % of inventory (cruise) plots
Super-emergent trees on 10% to 20% of inventory (cruise) plots (4 to 6 super-emergent trees per acre)	Super-emergent trees <5% of inventory (cruise) plots (<1 super-emergent trees per acre)	Super-emergent trees ____ % of inventory (cruise) plots
Mid-story canopy on 30% to 60% of stand	Mid-story canopy on <20% of stand	Mid-story canopy on _____ % of stand

Table 1 Example target bottomland hardwood forest conditions for migratory birds in the Lower Mississippi Alluvial Valley—Continued

Target forest conditions	Conditions that may warrant management	Current site conditions
Vines in midstory on 50% to 70% of inventory (cruise) plots	Vines in midstory on <30% of inventory (cruise) plots	Vines in midstory on ____ % of inventory (cruise) plots
Understory canopy cover on 40% to 50% of stand	Understory canopy cover on <30% of stand	Understory canopy cover on ____ % of stand
20% to 50% ground cover occupancy average across inventory (cruise) plots	<20% ground cover occupancy average across inventory (cruise) plots	____ % ground cover occupancy average across inventory (cruise) plots
Cane present on 20% to 40% of inventory (cruise) plots	Cane present on <20% of inventory (cruise) plots	Cane present on ____ % of inventory (cruise) plots
2 to 4 logs (12 inches or greater diameter) per acre that provide coarse woody debris	<2 logs (12 inches or greater diameter) per acre that provide coarse woody debris	_____ logs (12 inches or greater diameter) per acre that provide coarse woody debris
4 to 6 cavity trees >4 inches dbh/acre	<4 cavity trees >4 inches dbh/acre	_____ cavity trees >4 inches dbh/acre
1 to 4 large den trees or unsound cull trees per 10 acres	<1 large den tree or unsound cull tree per 10 acres	_____ large den tree or unsound cull tree per 10 acres

Definitions:

Overstory canopy—canopy layer of dominant and co-dominant trees
Midstory canopy—11 feet to lower overstory canopy
Understory canopy—3 to 10 feet in height
Ground cover—<3 feet in height

Recommendation: _____

_____

_____

NRCS representative _____ Date _____

USF&W Service representative _____ Date _____

Landowner _____ Date _____