United States
Department of
Agriculture

Soil
Conservation
Service

P.O. Box 2890
Washington, D.C.
20013

December 11, 1984

SOIL MECHANICS NOTE NO. 8
210-VI

SUBJECT: ENG - SOIL MECHANICS TESTING STANDARDS

Purpose. To distribute Soil Mechanics Note No. 8.

Effective Date. Effective when received.

All soil mechanics testing for planning and design of structural measures for Service work is to comply with established SCS standards. Most procedures are adapted from or follow established industry standards published by the American Society for Testing and Material (ASTM). Some tests used by SCS have not yet been published by ASTM.

This soil mechanics note gives the current procedures to be used by soil mechanics testing for SCS work. In-service testing work, as well as testing done by commercial or other laboratories for SCS work, should comply with these standards. The appendix contains suggested standard specifications for use in A&E contracting for soil mechanics testing and analysis work. They can be used along with specific details for each job in preparing procurement packages as needed.

Filing Instructions. File with other soil mechanics notes.

Distribution. Initial distribution (shown on the reverse side) to each state and NTC is sufficient to provide a copy to each professional engineer and engineering geologist. Additional copies may be obtained from central supply by ordering SMN-8.

Gerald D. Seinwill

GERALD D. SEINWILL
Associate Deputy Chief
for Technology

DIST: Distribution list enclosed.

U.S. DEPARTMENT OF AGRICULTURE
SOIL CONSERVATION SERVICE

NO-ADS-4
9-80

DISTRIBUTION AND CHECK LIST SMN-8

STATE	
AL-01	30
AK-02	5
AZ-04	30
AR-05	40
CA-06	70
CO-08	35
CN-09	10
DE-10	10
FL-12	20
GA-13	40
HA-15	10
ID-16	20
IL-17	40
IN-18	25
IA-19	40
KS-20	45
KY-21	25
LA-22	30
ME-23	15
MD-24	15
MA-25	15
MI-26	20
MN-27	30
MS-28	40
MO-29	30
MT-30	35
NE-31	30
NV-32	10
NH-33	10
NJ-34	15
NM-35	40
NY-36	35
NC-37	30
ND-38	20
OH-39	40
OK-40	75
OR-41	20
PA-42	35
PR-72	5
RI-44	5
SC-45	25
SD-46	20
TN-47	30
TX-48	100
UT-49	15
VT-50	10
VA-51	25
WA-53	35
WV-54	35
WI-55	20
WY-56	20
Total States	1430

TSC'S	
MTSC-63	30
WTSC-64	25
NETSC-61	25
STSC-62	30
Total TSC Staff	110
DC-75	
Total SCS	
OTHER	
Engineering Division at Cotton Annex	15
Engineering Division Room 6134-S	20
Central Supply	420
Grand Total SCS	2,000

REMARKS

Total Printing

U.S. Department of Agriculture
Soil Conservation Service
Engineering

Soil Mechanics Note No. 8

Soil Mechanics Testing Standards

October 1984

Table of Contents

		Page No.
I.	Purpose and Scope	1
II.	Definitions	1
III.	References	1
IV.	Test Procedures	2
	A. Moisture Content/Consistency Tests	2
	1. Laboratory Determination of Moisture Content of Soil	2
	2. Liquid Limit of Soils	2
	3. Plastic Limit and Plasticity Index of Soils	2
	4. Shrinkage Factors of Soils	3
	B. Gradation/Dispersion Tests	3
	1. Particle-Size Analysis of Soils	3
	2. Material Finer Than No. 200 (75-μm) Sieve in Mineral Aggregates by Washing	3
	3. SCS Dispersion Test (Double Hydrometer Test)	3
	4. Crumb Test	3
	5. Soluble Salts in Pore Water	4
	6. Pinhole Test	4
	C. Density/Moisture-Density Tests	12
	1. Specific Gravity of Soil	12
	2. Specific Gravity and Absorption of Coarse Aggregates	12
	3. Moisture-Density Relationships of Soils Using 5.5-lb (2.5-kg) Rammer and 12-in (305-mm) Drop	12
	4. Moisture-Density Relationships of Soils Using 10-lb (4.5-kg) Rammer and 18-in (457-mm) Drop	12
	5. Maximum Index Density of Soils Using a Vibratory Table	14

Page No.

6. Minimum Index Density of Soils 14

7. Moisture-Density Relations of Soil-Cement Mixtures 14

D. Shear Strength Tests 14

1. Unconfined Compression Strength of Cohesive Soil 14

2. Direct Shear Test of Soils Under Consolidated Drained Conditions 14

3. Triaxial Compression Tests 14

4. Repeated Direct Shear Test Under Consolidated Drained Conditions 16

5. Compressive Strength of Molded Soil-Cement Cylinders 16

E. Compressibility/Consolidation Tests 16

1. One-Dimensional Consolidation Properties of Soils 16

2. Permeability and Consolidation of Soil Containing Particles up to 3-in Diameter 16

3. Permeability and Consolidation of Soil Containing Particles up to 3/4-in Diameter 16

F. Permeability Tests 17

1. Permeability of Soil Containing Particles up to 3-in Diameter 17

2. Permeability of Soil Containing Particles up to 3/4-in Diameter 17

3. Constant-Head Permeability Test 17

4. Permeability Tests with Consolidometer 17

G. Durability Tests 17

1. Resistance to Abrasion of Small Size Coarse Aggregate by Use of the Los Angeles Machine . . . 17

2. Resistance to Abrasion of Large Size Coarse Aggregate by Use of the Los Angeles Machine . . . 17

Page No.

3. Soundness of Aggregates by Use of Sodium Sulfate 17

4. Soundness of Rock by Use of Sodium Sulfate . . . 18

5. Wetting-and-Drying Tests of Compacted Soil-Cement Mixtures 18

6. Freezing-and-Thawing Tests of Compacted Soil-Cement Mixtures 18

7. Clay Lumps and Friable Particles in Aggregates . 18

8. Scratch Hardness of Coarse Aggregate Particles . 18

9. Organic Impurities in Sands for Concrete 19

H. Chemical Tests 19

1. Potential Reactivity of Aggregates (Chemical Method) 19

2. pH Value (Soil Suspensions) 19

3. Resistivity of Soil 19

Attachment No. 1. Procedure for Back-pressure Saturation 20

Attachment No. 2. Floating Mold Compaction 22

Appendix Suggested Standard Specifications for Use in Contracting for Soil Mechnanics Testing and Analyses Work

U.S. Department of Agriculture
Soil Conservation Service
Engineering

October 1984

Soil Mechanics Note No. 8: Soil Mechanics Testing Standards

Trade names are used in this publication solely for the purpose of providing specific information. The mention of a trade name does not constitute a guarantee of the product by the U.S. Department of Agriculture nor does it imply an endorsement by the Department over other products not mentioned.

I. Purpose and Scope.

This note contains current procedures for testing soil and rock materials for engineering purposes. Most of these procedures comply with the American Society for Testing and Materials (ASTM) Standards. Deviations from these standards are noted.

Procedures adopted for physical or index properties must be followed consistently. Otherwise, comparison and correlation of data will not be valid.

Procedures used for determining engineering properties must be adapted to existing or anticipated site conditions and to the load conditions that will be imposed on the structure or foundation. If this is not done, the data may not be representative. It is imperative that the engineer responsible for the test program and design analyses inform testing personnel about site conditions and the purpose of each test.

II. Definitions.

Soil Mechanics Note No. 6 contains a collection of terms used in SCS soil mechanics.

III. References.

A. Annual Book of ASTM Standards, Section 4, Volume 04.08.

B. Highway Materials-Tests, AASHTO, Part II, 12th Edition, 1978.

C. Earth Manual, Bureau of Reclamation, USDI, First Edition, revised 1963.

This note prepared by Donald M. Sundberg and Lorn P. Dunnigan, Soil Mechanics Laboratory, Lincoln, Nebraska.

D. "Soil-Cement Slope Protection for Earth Dams: Laboratory Tests," Portland Cement Assn., CB 11, 1967.

E. "Procedures for Collecting Soil Samples and Methods of Analysis for Soil Survey," Soil Survey Investigations Report No. 1, USDA-SCS, 1984.

F. Diagnosis and Improvement of Saline and Alkali Soils, Agriculture Handbook No. 60, 1954.

G. "Laboratory Soil Testing," Engineer Manual EM1110-2-1906, November 30, 1970, Headquarters, Department of the Army, Office of the Chief of Engineers.

IV. Test Procedures.

Test procedures are grouped in the following categories: (A) moisture content/consistency; (B) gradation/dispersion; (C) density/moisture--density; (D) shear strength; (E) compressibility (consolidation); (F) permeability; (G) durability; (H) chemistry; and (I) miscellaneous.

A. Moisture Content/Consistency Tests.

1. SM Test A1. Laboratory Determination of Moisture Content of Soil.

a. Purpose. The determination of the weight of water in relation to the weight of solid particles in a given soil mass.

b. Procedure. ASTM D 2216-80.

2. SM Test A2. Liquid Limit of Soils.

a. Purpose. The determination of the moisture content at which the consistency of a soil changes from the liquid to the plastic state.

b. Procedure. ASTM D 4318-83.

(1) Procedure B unless wet preparation is specified.

(2) Use Procedure A when soil is suspected of being a laterite, an organic silt or clay, or other material that will change irreversibly with thorough drying, the sample shall not be dried prior to testing. The test shall be performed by either gradually wetting or drying the sample.

3. SM Test A3. Plastic Limit and Plasticity Index of Soils.

a. Purpose. The determination of (1) the moisture content at which the consistency of a soil changes from the plastic to the semisolid state and (2) the range of moisture within which the soil is plastic.

b. Procedure. ASTM D 4318-83.

4. SM Test A4. Shrinkage Factors of Soils.

a. Purpose. The determination of the moisture content at which a reduction in moisture content will not cause a decrease in the volume of a soil mass.

b. Procedure ASTM D 427-83.

B. Gradation/Dispersion Tests.

1. SM Test B1. Particle-Size Analysis of Soils.

a. Purpose. The quantitative determination of the distribution of particle sizes in soils.

b. Procedure. ASTM D 422-63.

2. SM Test B2. Material Finer Than No. 200 (75-μm) Sieve in Mineral Aggregates by Washing.

a. Purpose. The determination of the amount of fines in sand and gravel aggregate by washing.

b. Procedure. ASTM Designation C 117-80.

3. SM Test B3. SCS Dispersion Test (Double Hydrometer Test).

a. Purpose. The identification of dispersive clay soils by determining the amount of water-stable aggregates finer than 5 μm in a soil-water suspension to which a dispersing agent has not been added.

b. Procedure ASTM D 427-83a.

(1) Distilled water required.

4. SM Test B4. Crumb Test.

a. Purpose. An indicator test that can be used either in the field or in the laboratory for preliminary classification of clay soils as nondispersive or dispersive.

b. Procedure. A crumb of soil (about one-quarter of an inch) preserved at the natural water content is dropped gently into a beaker or clear plastic container of distilled water (about 150 ml). The tendency for the clay particles to go into colloidal suspension is observed after 1 h of immersion, using the following interpretation guide:

Evaluation of Results

Grade	Definition
1	No Reaction: Crumb may slake and run out on bottom of the beaker in a flat pile but there is no sign of cloudy water caused by colloids in suspension.

2 Slight Reaction: Bare hint of cloud in water near the surface of crumb. (If the cloud is easily visible, use group 3.)

3 Moderate Reaction: Easily recognizable cloud of colloids in suspension. Usually spreading out in thin streaks on bottom of beaker.

4 Strong Reaction: Colloidal cloud covers nearly whole bottom of beaker, usually in a very thin skin. In extreme cases, all the water in the beaker becomes cloudy.

5. SM Test B5. Soluble Salts in Pore Water.

a. Purpose. This is a standard test of the agricultural soil scientist used by the U.S. Department of Agriculture and others. Results of this test are used with the attached interpretation chart to identify dispersive clay soil.

b. Procedure. Use the following methods contained in the "Procedures for Collecting Soil Samples and Method of Analysis for Soil Survey," Soil Survey Investigations Report No. 1 (1984) are used.

(1) Saturated paste, mixed--method 8A.

(2) Saturation extract--method 8A1.

(3) Calcium--method 6N1B.

(4) Magnesium--method 60lb.

(5) Sodium--method 6P1a or 6P1b.

(6) Potassium--method 6Q1a or 6Q1b.

c. Calculations and Report.

(1) Calculate Ca, Mg, Na and K in meq/L as shown in the test methods.

(2) Sum up the total meq/L of Ca, Mg, Na, and K and report as total dissolved salts (TDS).

(3) Compute the percent Na in the TDS. Percent

$$\text{Na (meq/L)} = \frac{\text{Na}(100)}{\text{Ca} + \text{Mg} + \text{Na} + \text{K}}$$

(4) Use attached figure 2 to determine if soil contains dispersive clay.

6. SM Test B6. Pinhole Test.

a. Purpose. This is a test for direct measurement of the dispersibility (colloidal erodibility) of compacted fine-grained soils. Water is caused to flow through a small hole punched in a specimen. The water running through samples of dispersive clay carries a cloudy colored suspension of colloidal particles, whereas the water running through erosion resistant clays is crystal clear.

State: _____

Site: _____

NOTE: PERCENT SODIUM (MEQ./LITER) = $\frac{Na(100)}{Ca + Mg + Na + K}$

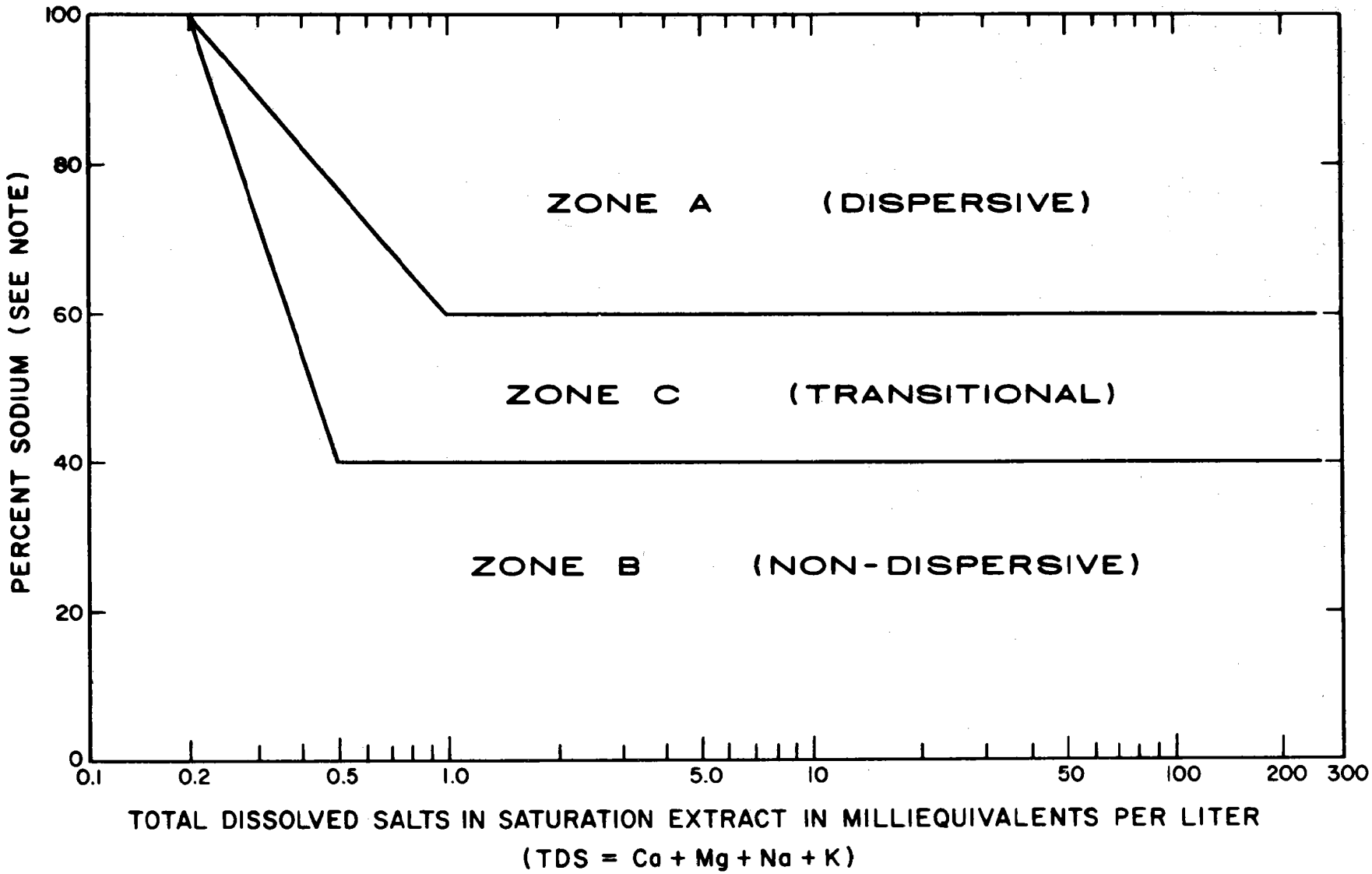

Figure 1

b. Sample preparation.

(1) Soil samples must be preserved at natural moisture contents by shipping and storing them in airtight bags or containers.

(2) If the material contains coarse sand or gravel particles, the particles are removed by gently working the material through the No. 10 (2 mm) sieve.

(3) The natural moisture content is measured and the moisture content is brought to near the plastic limit by adding distilled water (or by gradually drying, if too wet).

c. Procedure.

(1) The test specimen and the apparatus are shown schematically in figures 3 and 4.

(2) The test specimen is compacted in the cylinder on top of pea gravel and a wire screen. It is compacted in five layers, with 16 tamps per layer (15 lb spring), using a Harvard miniature compaction test tamper. This procedure gives about 95 percent of ASTM D 698 compaction.

(3) The plastic nipple is pushed into the top of the specimen with finger pressure, and a hole is punched in the specimen through the nipple with a 1.0 mm diameter stiff steel wire (hypodermic needle).

(4) After the apparatus is assembled, water is percolated through the hole in the sample under heads of 2 in, 7 in, 15 in, and 40 in for time periods of 5 to 10 min at each head. The quantity of flow is measured with a stop watch and graduated cylinders. Start with a 10 ml graduated cylinder and, as flow increases, go to a 25 ml or 50 ml graduated cylinder as necessary. Measure the flow continuously and record the time to fill each graduated cylinder as shown in typical data sheets (figures 4 and 5). Cloudiness of water is observed by looking both through the side of the flask and vertically through the column of fluid in the flask.

(5) At the end of successive flow tests, the apparatus is dismantled. The soil specimen is extruded from the cylinder and broken open so the size of the hole can be examined. The size is measured approximately by comparison with the needle used for punching the hole.

d. Criteria for evaluating results.

(1) <u>At 2-in head</u>.

(a) The test is started with a head of 2 in. (If no flow occurs, stop the test, dismantle top of apparatus, and repunch the hole or seal the first hole and make a new one. Flow generally occurs.)

(b) The principal differentiation between dispersive and nondispersive soils is given by test results under 2 in of head. If flow under 2 in of head is visibly cloudy and does not become clearer with time, the specimen is failing in the fashion typical of dispersive clays. The

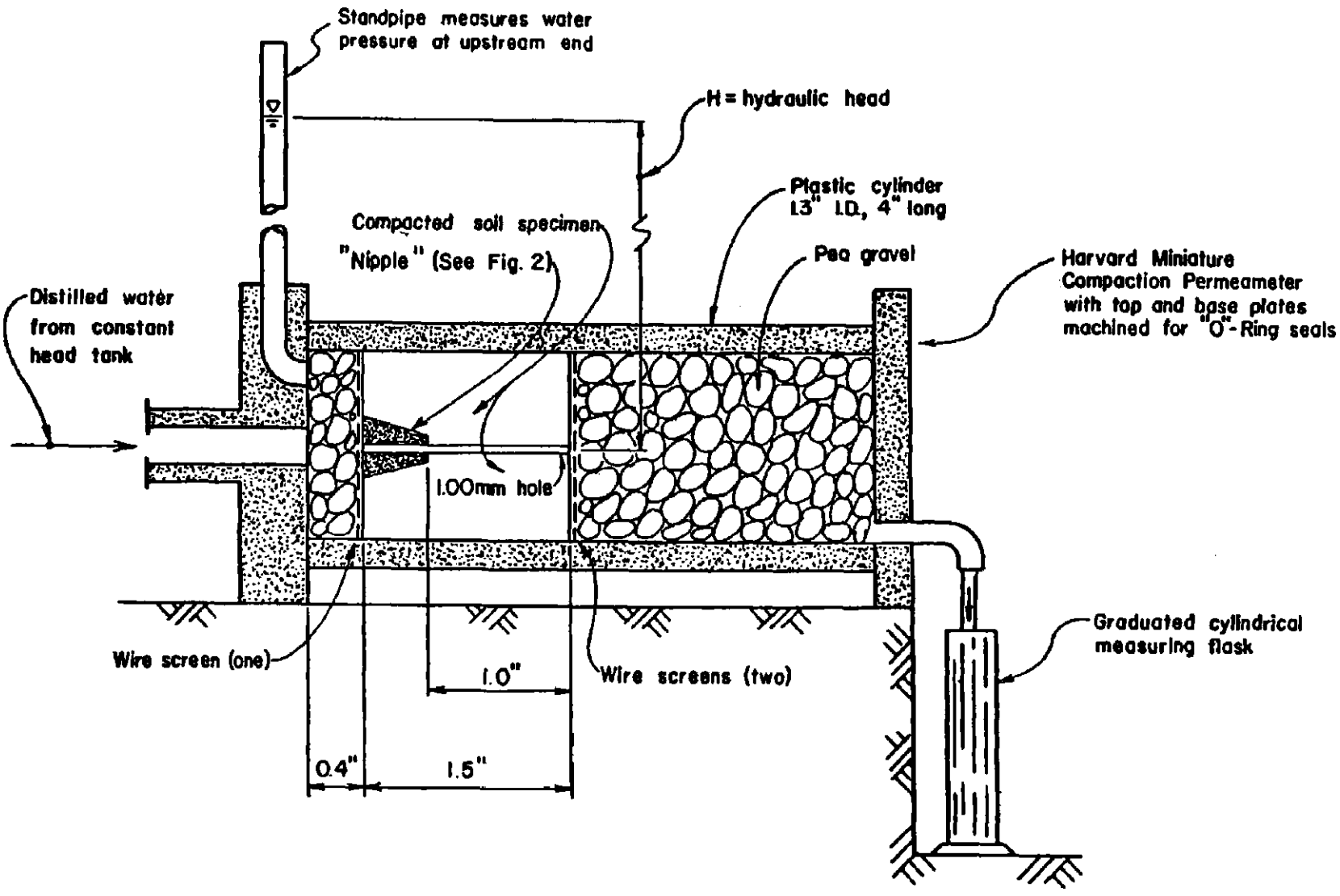

Figure 2 PINHOLE TEST APPARATUS

(Schematic - Not to scale)

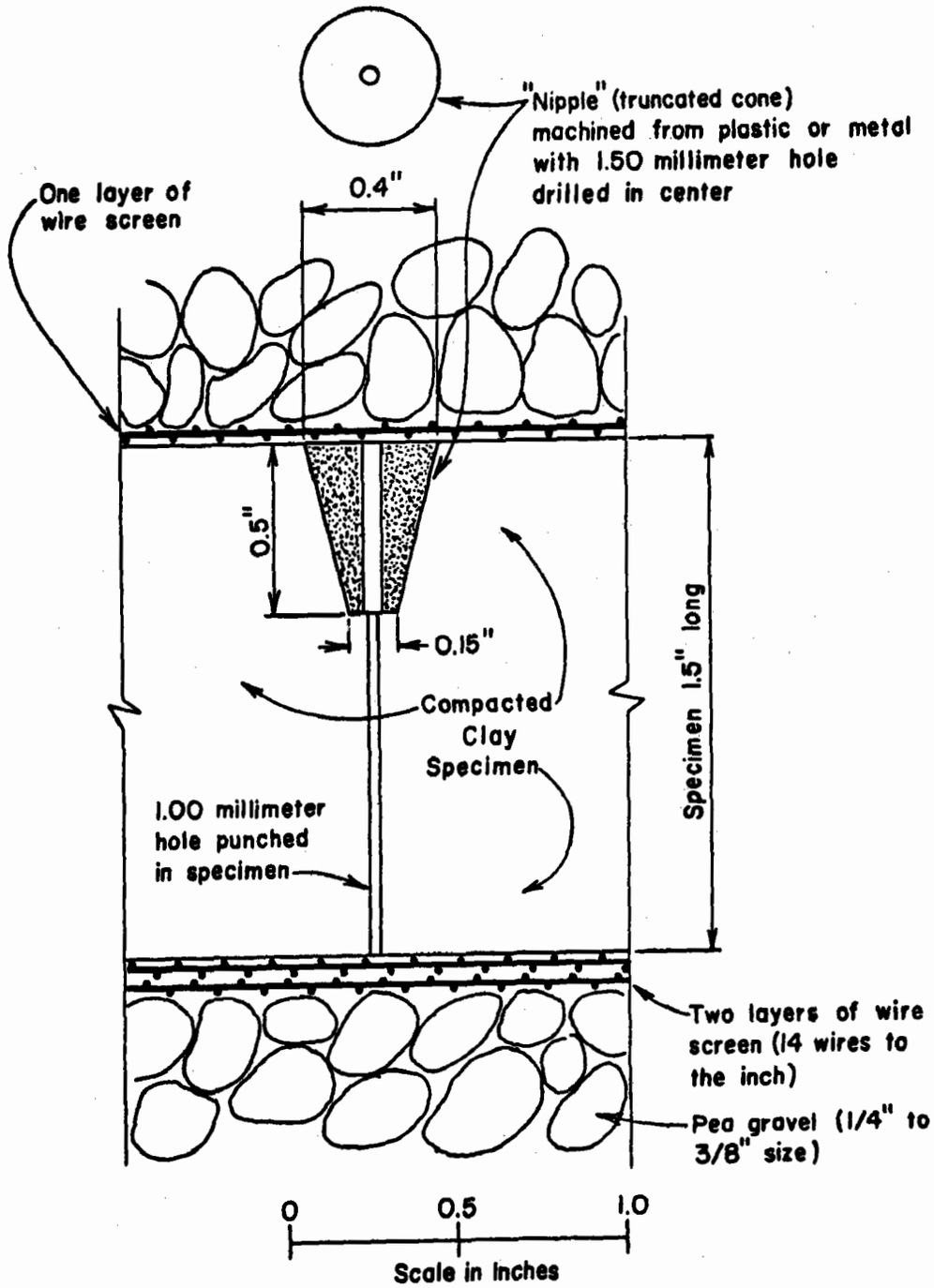

SECTION THROUGH PINHOLE TEST SPECIMEN

Figure 3

PIN HOLE TEST DATA

Pin Hole Test No. _____ Date: _____ Page: _____

Sample No. _____

Compaction Characteristics *good*

Water Content *near optimum*

Distilled water added: ✓ (Yes) or ____ (No)

Specimen after test:

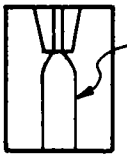

Final hole about 2.5 mm

Curing time: *none*

Flow started on *1st* trial.

Clock Time	Head	Flow Rate		Color from Side				Completely Clear from Top	Particles Falling			Remarks
		ml	sec	Dark	Slight to Medium	Barely Visible	Completely Clear		None	Few	Heavy	
9:30	2"	10	25	✓					✓			Highly colloidal
		10	8	✓					✓			
		25	18	✓					✓			
		25	17	✓						✓		" "
		25	16	✓						✓		
		25	15	✓						✓		
		25	14	✓						✓		" "
9:35		25	14	✓						✓		Stop test -
												Obvious failure (D1)

TYPICAL DATA FOR DISPERSIVE CLAY (D1)

Figure 4

PIN HOLE TEST DATA

Pin Hole Test No. _____ Date: _____ Page: _____

Sample No. _____

Compaction Characteristics *Soft sample*

Water Content *19.3%*

Distilled water added: ____ Yes or ✓ No

Specimen after test:

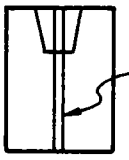

No erosion of hole

Curing time: *None compacted at natural water content* Flow started on *1st* trial.

Clock Time	Head	Flow Rate		Color from Side				Completely Clear from Top	Particles Falling			Remarks
		ml	sec	Dark	Slight to Medium	Barely Visible	Completely Clear		None	Few	Heavy	
10:33	2"	10	23				✓	✓	✓			Sparkling clear
		10	22					✓	✓			
		=										
		10	22					✓	✓			
10:38		10	22					✓	✓			
10:38	7"	25	27					✓	✓			
		25	27					✓	✓			
		=										
10:42		25	27					✓	✓			" "
10:43		25	27					✓	✓			
10:43	15"	50	31					✓	✓			
		50	31					✓	✓			
10:45		50	30					✓	✓			
10:47		50	31					✓	✓			" "
		50	31					✓	✓			
10:48	40"	50	16					✓	✓			
		50	16					✓	✓			
		=										
10:50		50	16					✓	✓			
		50	15.5					✓	✓			" "
		=										
10:52		50	15					✓	✓			
		50	16					✓	✓			
10:53		50	16					✓	✓			End Test (ND1)

TYPICAL DATA FOR DISPERSIVE CLAY (D1)

Figure 5

main indicator of failure is the colloidal color of the water. Most dispersive clays erode rapidly under 2 in of head, with pronounced color in the water coming through the specimen. For dispersive clays, usually the flow continuously increases and reaches a maximum value limited by the hydraulic capacity of the equipment in 2 to 5 min of flow (about 1.5 to 2.0 ml/s, using the nipple and the Harvard miniature permeameter). Run the test for 10 min. Unless the color of the water clears substantially, the test is completed for the typical dispersive clay. The hole will normally be increased to about 3 needle diameters after 10 min of flow. Classify as highly dispersive (DI).

(c) If the flow at 2 in of head has slight but easily visible color as seen from the side of the flask at the end of 5 min, continue test for total of 10 min. If the flow remains colored, stop the test. If the rate of flow at the end of 10 min has not exceeded 0.8 ml/s, and the hole diameter does not exceed 1.5 needle diameters, classify the results as intermediate (ND4). If the flow at the end of 10 min exceeds 1.0 ml/s, and hole diameter exceeds 2 needle diameters, classify as dispersive (D2). If the test is stopped at the end of 10 min and the results are classified as ND4 and D2, the test should be repeated with a new specimen to see what happens by raising the head to 7 in.

(d) If flow under 2 in of head is clear (or has only a very slight trace of color, as seen from the side of the flask) raise the head to 7 in at the end of 5 min and continue the test (rate of flow is usually 0.3 to 0.6 ml/s).

(2) At 7-in head.

(a) At 7-in head, if the water continues to flow clear or has only a trace of color as seen from the side of the flask, raise the head to 15 in after 5 min of flow and continue the test (rate of flow is usually less than 1.8 ml/s).

(b) If the water has color and rate of flow increases rapidly, stop the test. Classify the results as intermediate (ND3). The flow at end of test will generally exceed 2.5 ml/s, and the hole size will be larger than 2 needle diameters.

(3) At 15-in head.

(a) If the flow is completely clear as seen from the top of the measuring flask, raise the head to 40 in after 5 min (rate of flow is usually less than 2.5 ml/s).

(b) If the flow has slight color or exceeds 3.5 ml/s, stop test and classify the results as nondispersive (ND3).

(4) At 40-in head.

(a) If the flow continues to be completely clear at a rate usually less than 4.0 ml/s, classify the results as nondispersive (ND1). There should be no noticeable erosion of the hole in the sample at the end of the test.

(b) If the flow has a bare trace of color or exceeds 5.0 ml/s, classify the results as nondispersive (ND2).

(5) Examples of test data for a typical dispersive clay (D1) and for a typical nondispersive clay (ND1) are shown in figures 5 and 6.

(6) Criteria for evaluating test results are summarized in table 1.

e. Interpretation and report. The interpretation of test results is outlined in table 2.

C. Density/Moisture-Density Tests.

1. SM Test C1. Specific Gravity of Soil.

a. Purpose. The determination of the specific gravity of soil finer than a No. 4 (4.75 mm) sieve by means of a pycnometer.

b. Procedure. ASTM D 854-83 with the following exceptions:

(1) Paragraph 1.1. The minus No. 8 (2.36 mm) or minus No. 10 (2.0 mm) fraction of a soil may be used.

(2) Paragraph 5.1. A 20-g sample may be used.

(3) Paragraph 5.3. Soaking the sample in distilled water for 12 h may be omitted.

2. SM Test C2. Specific Gravity and Absorption of Coarse Aggregates.

a. Purpose. The determination of bulk and apparent specific gravity and absorption of soil retained on a No. 4 (4.75 mm) sieve.

b. Procedure. ASTM C 127-81.

3. SM Test C3. Moisture-Density Relationships of Soils Using 5.5-lb (2.5-kg) Rammer and 12-in (305-mm) Drop.

a. Purpose. The determination of the relationship between moisture content and density of soil by the standard compaction process.

b. Procedure. ASTM D 698-78.

4. SM Test C4. Moisture-Density Relationships of Soils Using 10-lb (4.5-kg) Rammer and 18-in (457-mm) Drop.

a. Purpose. The determination of the relationship between moisture content and density of soil by the modified compaction process.

b. Procedure. ASTM D 1557-78.

TABLE 1 SUMMARY OF CRITERIA FOR EVALUATING RESULTS

Classification (Table 1)	Head (Inches)	Test Time For Given Head (minutes)	Visual Final Flow Through Specimen (ml/sec)	Color of Flow at End of Test (cloudy or color)	Hole Size After Test (Needle Diameters)
D1	2	5	> 1.5	Very distinct	2x
D2	2	10	> 1.0	Distinct to slight	2x
ND4	2	10	< 0.8	Slight but easily visible	1.5x
ND3	7-15	5	> 2.5	Slight but easily visible	2x
$\overline{\text{N}}$D2	40	5	> 3.5	Clear or barely visible	2x
ND1	40	5	< 5.0	Crystal clear	No erosion

TABLE 2 CATEGORIES OF TEST RESULTS

Classification of Individual Test Results	Classification of Soil
D1 and D2	Dispersive soils: fail rapidly under 2-inch head.
ND4 and ND3	Intermediate soils: erode slowly under 2-inch or 7-inch head.
ND2 and ND1	Non-dispersive soil: no colloidal erosion under 15-inch or 40-inch head.

5. SM Test C5. Maximum Index Density of Soils Using a Vibratory Table.

a. Purpose. Maximum density represents the densest condition of a cohesionless, free draining soil that can be attained by a standard laboratory procedure. Maximum density is used to determine relative density. Relative density expresses the degree of compaction with respect to the loosest and the densest condition defined by standard laboratory procedures.

b. Procedure. ASTM D 4253-83.

6. SM Test 6. Minimum Index Density of Soils.

a. Purpose. Minimum density represents the loosest condition of a cohesionless, free draining soil that can be attained by a standard laboratory procedure. Minimum density is used to determine relative density. Relative density expresses the degree of compaction with respect to the loosest and the densest condition defined by standard laboratory procedures.

b. Procedure. ASTM D 4254-83

7. SM Test C7. Moisture-Density Relations of Soil-Cement Mixtures.

a. Purpose. The determination of the relationship between moisture and density of soil-cement mixtures when compacted by the standard compaction process before the cement hydrates.

b. Procedure. ASTM D 558-82.

D. Shear Strength Tests.

1. SM Test D1. Unconfined Compression Strength of Cohesive Soil.

a. Purpose. The determination of the unconfined compressive strength of cohesive soils in undisturbed and remolded conditions.

b. Procedure. ASTM D 2166-66.

2. SM Test D2. Direct Shear Test of Soils Under Consolidated Drained Conditions.

a. Purpose. The determination of the consolidated drained shear strength of all soil materials in direct shear and on undisturbed and remolded samples.

b. Procedure. ASTM D 3080-72.

3. SM Test D3. Triaxial Compression Tests.

a. Purpose. The determination of shear strength of soil under controlled drainage conditions.

b. Procedure. Appendix X: Engineering and Design Laboratory Soils Testing, Engineer Manual EM 1110-2-1906, November 30, 1970, Headquarters, Department of the Army, Office of the Chief of Engineers.

The procedures of Appendix X are used with some exceptions. The exceptions are referenced to the paragraph and subparagraph of Appendix X where they apply as follows:

2. Types of tests. Substitute UU for Q, CU for R, and CD for S.

(a) Substitute UU for Q.

(b) Substitute CU for R.

(c) Substitute CD for S.

3.b. A triaxial compression chamber like Wykeham Farrance Model WF10210 is acceptable when the actual piston friction is measured before the start of the test as outlined in subparagraph 3.b.(2).

3.d. Prophylactics are made of very thin rubber and make good membranes. Sheik brand No. 23 works very well for 1.4 in diameter test specimens. A double thickness (two per specimen) is suggested. Sealing with two O-rings at each end is also suggested.

4.a.(2). The floating mold compaction procedure outlined in attachment No. 2 may be used.

5.b.(4). No membrane correction is required when using very thin rubber membranes such as Sheik No. 23 prophylactics.

5.c. Form SCS-ENG-355A is used.

6.b.(2) through (6). Alternate procedure for back-pressure saturation, saturation check, and leak checks are given in Attachment No. 1.

6.b.(7). If pore pressure measurements are to be made, refer to "The Triaxial Test" by Bishop and Hinkel, pages 192 to 204 for allowable strain rates. For many soils, a strain rate of 0.002 in/min on 1.4" x 3" specimen is satisfactory if filter strips are used.

6.c.(6). Membrane correction is not necessary if very thin rubber membranes such as prophylactics (Sheik No. 23) are used.

6.d. Forms SCS-ENG-355A and 355B are used.

7.a. Controlled strain can be used for relatively impervious soils if a slow enough strain rate is used.

7.b.(2). The minimum time to failure required to ensure a drained test can be estimated by multiplying 50 x t_{50} time, where the t_{50} time is determined from the plot of volume change vs. time determined during the consolidation stage.

7.d. Form SCS-ENG-355A is used.

4. SM Test D4. Repeated Direct Shear Test Under Consolidated Drained Conditions.

a. Purpose. The determination of the consolidated drained shear strength of a soil (primarily clay shale material under drained conditions).

b. Procedure. Appendix IXA: Engineering and Design Laboratory Soils Testing, Engineer Manual EM1110-2-1906, November 30, 1970, Headquarters, Department of the Army, Office of the Chief of Engineers.

5. SM Test D5. Compressive Strength of Molded Soil-Cement Cylinders.

a. Purpose. The determination of the compressive strength of soil-cement to be used for slope protection for earth dams in relation to the rate of hardening and whether the soil mixture is reacting normally. The compressive strength is not used for design purposes.

b. Procedure. ASTM D 1633-63 except: 4.0-in (101.6 mm) diameter by 4.58-in (116.33 mm) high specimens formed in a compaction mold may be used.

E. Compressibility/Consolidation Tests.

1. SM Test E1. One-Dimensional Consolidation Properties of Soils.

a. Purpose. The determination of the magnitude, rate of consolidation, and the rebound of undisturbed and remolded soil when it is restrained laterally and loaded (or unloaded) under axial drainage conditions.

b. Procedure. ASTM D 2435-80.

2. SM Test E2. Permeability and Consolidation of Soil Containing Particles up to 3-in Diameter.

a. Purpose. The determination of the permeability and the consolidation of compacted soil having particles as large as 3-in diameter.

b. Procedure. Designation E-14, Earth Manual, Bureau of Reclamation, USDI.

3. SM Test E3. Permeability and Consolidation of Soil Containing Particles up to 3/4-in Diameter.

a. Purpose. The determination of the permeability and the consolidation of compacted soil having particles as large as 3/4-in diameter.

b. Procedure. Designation E-14, Earth Manual, Bureau of Reclamation, USDI, except that an 8-in-diameter permeability cylinder (see Designation E-13) is used.

F. Permeability Tests.

1. SM Test F1. Permeability of Soil Containing Particles up to 3-in Diameter. See SM Test E2.

2. SM Test F2. Permeability of Soil Containing Particles up to 3/4-in Diameter. See SM Test E3.

3. SM Test F3. Constant-Head Permeability Test.

a. Purpose. The determination of the coefficient of permeability for remolded soils passing the No. 4 sieve and the permeability of fine grained undisturbed soils.

F-13

b. Procedure. Designation E-31, Earth Manual, Bureau of Reclamation, USDI, except that the permeameters and method of applying constant head can vary from those shown in this designation.

4. SM Test F4. Permeability Tests with Consolidometer.

a. Purpose. The determination of the coefficient of permeability of saturated test specimens in conjunction with the consolidation test.

b. Procedure. Appendix VII, Engineering and Design, Laboratory Soils Testing, Engineer Manual EM1110-2-1906, November 30, 1970, Headquarters, Department of the Army, Office of the Chief of Engineers. The permeability test is performed at the end of the consolidation phase under each of at least three different load increments.

G. Durability Tests.

1. SM Test G1. Resistance to Abrasion of Small Size Coarse Aggregate by Use of the Los Angeles Machine.

a. Purpose. The determination of the resistance to abrasion of gravel and coarse sand smaller than 1½ in (37.5 mm) using the Los Angeles testing machine.

b. Procedure. ASTM Designation C 131-81.

2. SM Test G2. Resistance to Abrasion of Large Size Coarse Aggregate by Use of the Los Angeles Machine.

a. Purpose. The determination of the resistance to abrasion of coarse gravel larger than 3/4 in (19 mm) using the Los Angeles testing machine.

b. Procedure. ASTM Designation C 535-81.

3. SM Test G3. Soundness of Aggregates by Use of Sodium Sulfate.

a. Purpose. The determination of the resistance of sand and gravel to disintegration by saturated solution of sodium sulfate. The test furnishes information that is helpful in judging the soundness of sand and gravel subject to weathering action, particularly when adequate field performance data are not available.

b. Procedure. ASTM C 88-76, except that sodium sulfate only shall be used.

4. SM Test G4. Soundness of Rock by Use of Sodium Sulfate.

a. Purpose. The determination of the resistance to disintegration of rock by use of saturated solution of sodium sulfate. The test furnishes information that is helpful in judging the soundness of rock subject to weathering action, particularly when adequate field performance data are not available.

b. Procedure. AASHTO T 104-68 with the following exceptions:

(1) Use only sodium sulfate.

(2) Use only the ledge rock procedure specified in paragraph 5.3.

5. SM Test G5. Wetting-and-Drying Tests of Compacted Soil-Cement Mixtures.

a. Purpose. The determination of the soil-cement losses, moisture changes, and volume changes (swell and shrinkage) produced by repeated wetting and drying of hardened soil-cement specimens.

b. Procedure. ASTM D 559-82.

6. SM Test G6. Freezing-and-Thawing Tests of Compacted Soil-Cement Mixtures.

a. Purpose. The determination of the soil-cement losses, moisture changes, and volume changes (swell and shrinkage) produced by repeated freezing and thawing of hardened soil-cement specimens.

b. Procedure. ASTM D 560-82.

7. SM Test G7. Clay Lumps and Friable Particles in Aggregates.

a. Purpose. The approximate determination of clay lumps and friable particles in natural sands and gravels.

b. Procedure. ASTM C 142-78.

8. SM Test G8. Scratch Hardness of Coarse Aggregate Particles.

a. Purpose. The determination of the quantity of soft and poorly bonded particles in gravel on the basis of scratch hardness.

b. Procedure. ASTM C 851-76.

9. SM Test G9. Organic Impurities in Sands for Concrete.

a. Purpose. The approximate determination of the presence of injurious organic compounds in natural sands used in cement mortar or concrete.

b. Procedure. ASTM C 40-79.

H. Chemical Tests.

1. SM Test H1. Potential Reactivity of Aggregates (Chemical Method).

a. Purpose. The chemical determination of the potential reactivity of an aggregate with alkalies in portland cement concrete.

b. Procedure. ASTM C 289-81.

2. SM Test H2. pH Value (Soil Suspensions).

a. Purpose. The determination of the degree of acidity or alkalinity of a soil.

b. Procedure. Either of the following methods contained in Procedures for Collecting Soil Samples and Methods of Analysis for Soil Survey, Soil Survey Investigations Report No. 1 (1984), may be used.

(1) Saturated paste--method 8C1b.

(2) Water Dilution--method 8C1a.

3. SM Test H3. Resistivity of Soil.

a. Purpose. The determination of the electrical resistance of a soil paste for use in evaluating the corrosion potential of buried iron or steel pipe.

b. Procedure. Method 8A2, Procedures for Collecting Soil Samples and Methods of Analysis for Soil Survey, Soil Survey Investigations Report No. 1 (1984) except that this method is not used to estimate percentage of soluble salts.

Procedure for Back-pressure Saturation

1. The magnitude of the required back pressure may be computed as follows:

$$U_b \ (kg/cm^2) = \frac{100 - S}{2}$$

where S is the degree of saturation of the test specimen expressed as a percent

$kg/cm^2 \times 14.223 = lb/in^2$

2. To reach saturation, the chamber pressure and the back pressure are increased in increments. The number of increments required will depend on the back pressure required. The size of each increment will depend on the consolidating pressure that will be used.

3. The upper limit ($\bar{s}_U$) of each increment should not be more than one-half of the consolidating pressure. A value less than one-half is suggested where consolidating pressures are less than 50 lb/in^2.

4. The lower limit ($\bar{s}_L$) must be high enough to ensure that the membrane on the specimen is not blown out. A minimum of 3 lb/in^2 and a maximum of 5 lb/in^2 is suggested.

5. Start the back-pressure saturation by applying a chamber pressure and a back pressure with the drain valves closed.

The chamber pressure applied should equal 7 lb/in^2 or one-half of the upper limit for each increment, whichever is smaller.

The back pressure applied should equal the difference between the chamber pressure applied and the lower limit or zero, whichever is greater.

6. Open the drain valves and plot burette and axial dial readings vs. logarithm of time until water has essentially stopped entering the specimen.

7. Close the drain valve.

8. Increase the chamber pressure to the upper limit determined in step 3 and increase the back pressure by an amount equal to the upper limit minus the lower limit.

9. Repeat steps 6 and 7.

10. Increase both the chamber pressure and the back pressure in increments equal to the upper limit minus the lower limit. Then repeat steps 6 and 7.

11. Repeat step 10 until the back pressure has been increased to the desired value. (Note that during the final saturation step the increase in chamber pressure and back pressure might have to be less than ($\bar{s}_U - \bar{s}_L$) in order to achieve the desired value of U_b.)

12. Following step 11, close the drain valve. Increase the chamber pressure about 5 to 10 lb/in^2 to verify the completeness of saturation. If the measured increase in pore pressure (WU) immediately is equal to the applied increase in chamber pressure (Ws), $\bar{B} = \frac{WU}{Ws}$ is unity and the test specimen and the system are completely saturated.

An increase in pore water pressure less than the applied cell pressure is due to either air still remaining in the sample and/or pore waterlines or the stiffness of the sample.

13. Following the saturation check, monitor the pore water pressure as a function of time to determine if there are any leaks in the system. An external leak shows up as an approximately constant rate of decrease in pore pressure with time whereas an internal leak causes an approximately constant rate of increase with time. If a leak is detected stop the test, correct the problem and start over again. A new test specimen is needed if the leak caused overconsolidation.

14. If the saturation check indicates a $\bar{B}$ parameter less than unity, add another increment of pressure to the chamber and to the specimen (step No. 11).

15. Repeat step 12. If the new value of $\bar{B}$ is larger than the first value obtained at the lower back pressure but still less than unity, the system is not yet completely saturated. Repeat step 14.

If the new value of $\bar{B}$ is still less than unity but equal to the value obtained at the lower back pressure, the system is completely saturated.

16. When it is determined that the system is completely saturated, increase the chamber pressure to a value equal to the back pressure plus the consolidating pressure.

17. Repeat step 6 and allow consolidation to proceed well into secondary.

18. Following the consolidation period, close the drain valve and monitor pore pressure as a function of time to determine if consolidation is complete and to determine if there are any leaks in the system. Leaks will be evident as outlined in step 13. Residual pore water pressure due to incomplete consolidation will be evident by an increase in pore pressure that does not change with time.

19. If everything checks out, start the axial loading.

Floating Mold Compaction

The floating mold equipment is shown in figure 6. It consists of two plungers that compress the soil inside a split steel mold. The mold floats between the two plungers with its weight being entirely supported against the soil by friction. This procedure differs from the standard laboratory method of static compaction in one very important way. With this method, the final length of the specimen is controlled by an external jig. This allows both plungers to move right up to the instant that the final compaction is achieved and helps to ensure that the specimen is compacted equally from both ends. When using this molding technique, the SCS procedure is to form the specimen in two sections initially and then press the two sections together for the test specimen.

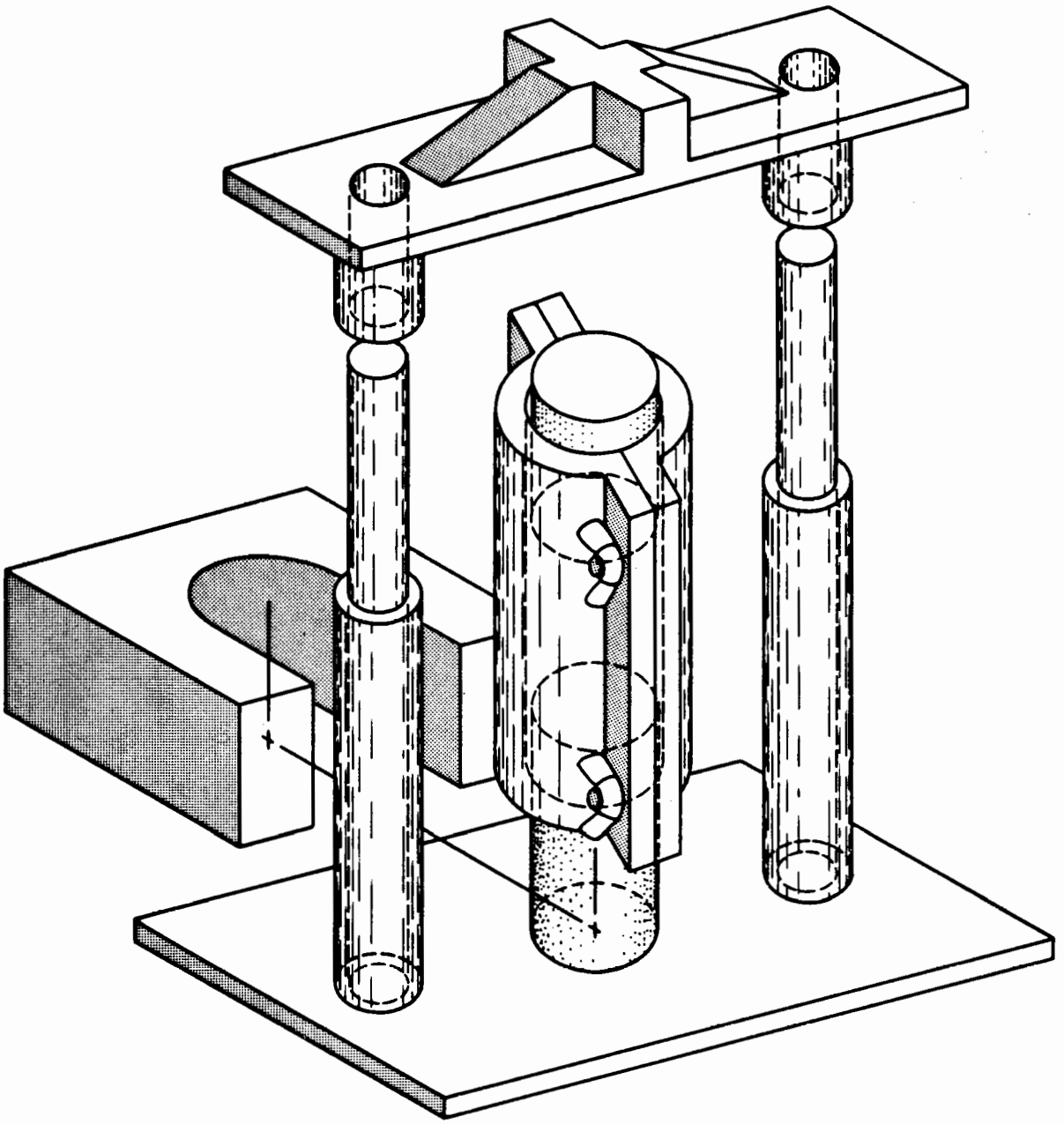

FLOATING MOLD COMPACTION DEVICE

Figure 6

APPENDIX
Suggested Standard Specifications for use in Contracting for Soil Mechanics Testing and Analysis Work

SUBPHASE _____ SOIL MECHANICS LABORATORY TESTING

Scope: Perform adequate soil mechanics laboratory testing to serve as a basis for design and construction of the structure and appurtenances. The soil testing program shall include both index and engineering property tests when appropriate. All testing shall be done on samples that represent the range of materials at the site. Testing methods shall be compatible with the type of engineering analysis made and the field conditions that will exist.

Coordination:

1. Before the laboratory testing program is started, the contractor shall submit for review and approval a plan detailing the number and kinds of tests to be performed, the sources of the materials to be tested, and a schedule for completion of the testing program. The plan shall include narrative statements indicating the purpose for making the proposed tests, the proposed use of the test results, and a reference to the delineated materials represented by the samples to be tested. ____ copies of this plan will be furnished to the contracting officer.

2. When approximately 75% of the testing has been completed, the contractor and the contracting officer will review the testing program and results, and agree on remaining needs and testing requirements.

General Requirements:

1. All soil samples shall be tested as soon as possible after they are received by the laboratory in order to reduce storage time and possible disturbance from unnecessary handling. Particular care is to be taken with undisturbed samples to assure that the water content (except for removal of free water) and physical condition do not change prior to testing. If undisturbed samples are to be stored in excess of seven days before testing, they must be removed from the tubes, waxed, and stored in a room with controlled, high humidity.

2. All samples shall be inspected prior to testing and their general condition noted. Any unusual conditions shall be reported. Any sample disturbance shall be described and, in the case of tube samples, the amount of wash material, compression, or other distortion shall be measured and reported.

   Any other information that the testing organization feels will be pertinent to the engineering application of the test results shall be reported.

3. The laboratory shall visually describe all samples and classify each according to the Unified Soil Classification System. A log of each undisturbed sample will be made if changes in the character of the soil are noted within a single sample. This log will show the exact location of test samples.

4. All necessary soil tests will be made on a sufficient number of samples to provide adequate data for design and subsequent construction control of the works.

Specific Requirements for Testing:

Soil testing shall be done in accordance with the methods or procedures listed in the technical specifications for each test. If other procedures are used or other tests are deemed necessary, they shall be those generally accepted by the soil engineering profession and must be approved by the contracting officer prior to beginning the test. The report forms shall identify the project and sample and show all data pertinent to the test, including weights and measurements of the sample, method of testing, and conditions of test such as density and water content. Test results should be shown graphically where possible. A tabulated summary of test results shall be compiled for inclusion in the report.

Reporting:

Upon completion of the testing program, _____ copies of a report, including test data and a summary of the engineering properties and suggested design parameters, will be submitted to the contracting officer.

The original test data sheets (or suitable copies) for all tests performed shall be included in a separate report that accompanies the test data.

Test results shall be recorded on Standard SCS forms as identified under each Technical Specification. Use of any forms other than those specified must be approved by the contracting officer prior to their use. Alternative forms must contain all the data reported on the Standard SCS forms.

TECHNICAL SPECIFICATIONS FOR LABORATORY DETERMINATION OF WATER CONTENT OF SOIL

1. Preparation of Samples

Not applicable.

2. Test Procedures

The water content of a sample shall be determined in accordance with ASTM D 2216.

3. Presentation of Test Results

The test results shall be expressed to the nearest tenth as a percent of the ovendry weight of the soil and shall be recorded on forms to be furnished to the contractor by the contracting officer. However, the contractor may use alternative forms if they contain the same data as the furnished forms and if they are approved in writing by the contracting officer prior to their use. In addition, the original work data sheet, or a copy thereof, shall be furnished to the contracting officer.

4. Measurement and Payment

The number of water content tests performed and accepted under the terms of this contract will be counted. Payment for water content tests performed as a part of another test will be included in the compensation for that test. Payment for each test accepted will be made at the agreed unit price per test for Laboratory Determination of Water Content of Soil. This payment will be considered full compensation for all labor, materials, equipment, and incidentals necessary for the completion of the work.

TECHNICAL SPECIFICATIONS FOR

ATTERBERG LIMITS TEST

1. Scope

This test covers the determination of the liquid limit, plastic limit, and plasticity index of a soil. The determination of the shrinkage limit is included in Technical Specification SCS-SM-TEST A4, Shrinkage Factors of Soils.

2. Preparation of Samples

Samples should be prepared for the Atterberg Limits test in accordance with ASTM D 421.

3. Test Procedure

Consistency of a soil sample shall be determined by performing Atterberg Limits tests in accordance with ASTM Standard D 4318. The onepoint method will not be acceptable. A minimum of four points shall constitute an acceptable test, with at least three points plotting in a straight line.

4. Presentation of Data

The liquid limit (LL), plastic limit (PL), and the plasticity index (PI) shall be calculated to the nearest whole number for each sample. These values shall be recorded on forms furnished to the contractor by the contracting officer. However, the contractor may use alternative forms if they contain the same data as the furnished forms if they are approved in writing by the contracting officer prior to their use. In addition, the original work data sheet, or a copy thereof, shall be furnished to the contracting officer.

5. Measurement and Payment

The number of Atterberg Limits tests performed and accepted under the terms of this contract will be counted. Payment for each test accepted will be made at the agreed unit price per test for Atterberg Limits Test. This payment will be considered full compensation for all labor, materials, equipment, and incidentals necessary for completion of the work.

TECHNICAL SPECIFICATIONS FOR

SHRINKAGE FACTORS OF SOILS

1. Preparation of Samples

Samples for this test shall be prepared in accordance with ASTM D421.

2. Test Procedures

The shrinkage limit, shrinkage ratio, volumetric shrinkage and linear shrinkage shall be determined on a soil sample in accordance with ASTM D 427.

3. Presentation of Test Results

Test results for the shrinkage limit, shrinkage ratio, volumetric shrinkage and linear shrinkage shall be recorded on forms furnished to the contractor by the contracting officer. However, the contractor may use alternative forms if they contain the same data as the furnished forms if they are approved in writing by the contracting officer prior to their use. In addition, the original work data sheets, or a copy thereof, shall be furnished to the contracting officer.

4. Measure and Payment

The number of shrinkage factor tests performed and accepted under the terms of this contract will be counted. One test will consist of the shrinkage limit, shrinkage ratio, volumetric shrinkage, and linear shrinkage data for one sample. Payment for each test accepted will be made at the agreed unit price per test for Shrinkage Factors of Soils. This payment will be considered full compensation for all labor, materials, equipment, and incidentals necessary for completion of the work.

TECHNICAL SPECIFICATIONS FOR

SAMPLE PREPARATION--WET METHOD

1. Pickup Condition

Samples for double hydrometer dispersion tests, crumb tests, and pinhole tests shall be stored in airtight containers prior to testing to preserve their in situ moisture content.

2. Procedure

A. A minimum of three 1/4-in. size clods will be selected from the sample and retained in a moistureproof container to run the Crumb Dispersion Test.

B. The remainder of the moist sample will be worked through the No. 10 sieve with no additional moisture added. The soil retained on the No. 10 sieve can then be airdried and used for gravel sieve analysis if necessary.

The soil finer than the No. 10 sieve shall be stored in moistureproof containers for the following tests:

Sand Sieve Analysis, SCS-SM-TEST B1.A
Double Hydrometer Dispersion Test, SCS-SM-TEST B3
Hydrometer Analysis, SCS-SM-TEST B7
Pinhole Test, SCS-SM-TEST B6

All Minus No. 10 soil not used in the above tests shall be stored in moistureproof containers and retained by the contractor until the soil mechanics laboratory testing phase is accepted by the contracting officer.

The soil retained on the No. 10 sieve may be discarded after the gravel sieve analysis is completed.

3. Handling and Transportation

All moistureproof containerized samples will be handled and transported in a manner to prevent damage to bags and resulting spillage of soil in storage and in transit.

4. Measurement and Payment

No payment will be made for this item. Cost incurred by the contractor will be included in the agreed-to unit price for the applicable tests.

TECHNICAL SPECIFICATION FOR

DRY UNIT WEIGHT AND LOG OF UNDISTURBED SAMPLE

1. Application

This specification covers the determination of the dry unit weight (mentioned below) for undisturbed samples.

2. Procedure

The test shall be performed in accordance with the U.S. Army Corps of Engineers EM111021906, Appendix II.

In addition, the condition of the sample is to be reported. This will include consistency, texture, field classification, identification and location of sample, size and type of sample, and the amount and size of sample saved for additional testing. Other information deemed appropriate by the contractor should also be included.

3. Presentation of Test Results

The dry unit weight of the sample in pounds per cubic foot and a description of the condition of the sample shall be reported on forms to be supplied by the contracting officer to the contractor. However, the contractor may use alternative forms if they contain the same data as the furnished forms if they are approved in writing by the contracting officer prior to their use. The original data sheet, or a suitable copy, will be furnished to the contracting officer.

4. Measurement and Payment

The number of dry unit weight tests performed and accepted under the terms of this contract will be counted. Payment for each test accepted will be made at the agreed-to unit price per test for Dry Unit Weight and Log of Undisturbed Sample. This payment will be considered full compensation for all labor, materials, equipment, and incidentals necessary for the completion of the work.

TECHNICAL SPECIFICATIONS FOR

PARTICLE-SIZE ANALYSIS OF SOILS

(GRAVEL SIEVE)

1. Preparation of Samples

Samples for gravel sieve analysis shall be prepared in accordance with ASTM D 421.

2. Test Procedures

Soil particles of each sample to be tested shall be separated into fractions by mechanical agitation in accordance with ASTM Designation D 422. Separation shall be made on the following sieve sizes: 3 in , 1-1/2 in, 1 in, 3/4 in, 1/2 in, 3/8 in, and the No. 4 sieve. Other sizes may be substituted for the above list, if they provide a full grain-size curve over the range of gravel sizes. Substitutions must be approved by the contracting officer prior to testing.

3. Presentation of Test Results

Test results shall be recorded as the percent passing each sieve size on forms to be furnished to the contractor by the contracting officer. However, the contractor may use alternative forms if they contain the same data as the furnished forms if they are approved in writing by the contracting officer prior to their use. In addition, the original work data sheet, or a copy thereof, shall be furnished to the contracting officer.

4. Measurement and Payment

The number of gravel sieve tests performed and accepted under the terms of this contract will be counted. Payment for each test accepted will be made at the agreed-to unit price for Particle-Size Analysis of Soils (Gravel Sieve). This payment will be considered full compensation for all labor, materials, equipment, and incidentals necessary for completion of the work.

TECHNICAL SPECIFICATIONS FOR

PARTICLE-SIZE ANALYSIS OF SOILS

(SAND SIEVE)

1. Preparation of Samples

Samples for sand sieve analysis shall be prepared in accordance with ASTM D 421.

2. Test Procedures

Soil particles of each sample to be tested shall be separated into fractions by mechanical agitation in accordance with ASTM D 422. Separation shall be made on the following sieve sizes: No. 4, No. 10, No. 20, No. 40, No. 60, No. 140, and No. 200. Other sizes may be substituted if they provide a full gradation curve over the range of sand sizes. Substitutions must be approved in writing by the contracting officer prior to testing.

3. Presentation of Test Results

Test results shall be recorded as the percent passing each sieve size on forms to be furnished to the contractor by the contracting officer. However, the contractor may use alternative forms if they contain the same data as the furnished forms if they are approved in writing by the contracting officer prior to their use. In addition, the original work data sheet, or a copy thereof, shall be furnished to the contracting officer.

4. Measurement and Payment

The number of sand sieve tests performed and accepted under the terms of this contract will be counted. Payment for each test accepted will be made at the agreed-to unit price per test for Particle-Size Analysis of Soils (Sand Sieve). This payment will be considered full compensation for all labor, materials, equipment, and incidentals necessary for completion of the work.

TECHNICAL SPECIFICATIONS FOR

PARTICLE-SIZE ANALYSIS OF SOILS

(HYDROMETER)

1. Preparation of Samples

Samples for hydrometer analysis shall be prepared in accordance with ASTM D 421.

2. Test Procedures

Hydrometer analysis shall be performed using the sedimentation process in accordance with ASTM Designation D 422. Reporting sizes required are 0.074 mm, 0.05 mm, 0.02 mm, 0.005 mm, and 0.002 mm.

3. Presentation of Results

Test results shall be recorded as the percent finer than each size requested on forms furnished to the contractor by the contracting officer. However, the contractor may use alternative forms if they contain the same data as the furnished forms if they are approved in writing by the contracting officer prior to their use. In addition, the original work data sheet, or a copy thereof, shall be furnished to the contracting officer.

4. Measurement and Payment

The number of hydrometer analysis tests performed and accepted under the terms of this contract will be counted. Payment for each test will be made at the agreed-to unit price per test for Particle-Size Analysis of Soils (Hydrometer). This payment will be considered full compensation for all labor, materials, equipment, and incidentals necessary for completion of the work.

TECHNICAL SPECIFICATIONS FOR

DOUBLE HYDROMETER DISPERSION TEST*

1. Introduction

This test requires running two hydrometer tests on samples of the same soil. One hydrometer test is the standard test in which the sample is dispersed by using mechanical agitation with a chemical dispersant as a control. (Refer to Technical Specification SCS-SM-TEST B 7 for Hydrometer Analysis.) The second test procedure shall be in accordance with ASTM Standard Method D 4221.

2. Sample Preparation

A representative sample from the moistureproof container shall be selected and processed through a No. 10 sieve. The water content of the material passed through the No. 10 sieve is determined.

3. Test Procedure

The test procedure given in ASTM Standard Method D 4221 shall be used.

4. Presentation of Test Results

The results shall be reported as the percent dispersion for each sample tested on forms provided to the contractor by the contracting officer. However, the contractor may use alternative forms if they contain the same data as the furnished forms if they are approved in writing by the contracting officer prior to their use. Original data sheets or suitable copies shall also be furnished to the contracting officer.

5. Measurement and Payment

The number of double hydrometer dispersion tests performed and accepted under the terms of this contract will be counted. Payment for each test accepted will be made at the agreed-to unit price for Double Hydrometer Dispersion Test. This payment will be considered full compensation for all labor, materials, equipment, and incidentals necessary for completion of the work.

* The Double Hydrometer Dispersion Test is the same test as the SCS Laboratory Dispersion Test.

TECHNICAL SPECIFICATIONS FOR

CRUMB DISPERSION TEST

1. Equipment and Apparatus Needed

- Small plastic glasses (8oz. flatbottomed cocktail glasses work best).
- Supply of fresh distilled water.
- Small moist clods of sample to be tested.

2. Sample Preparation

Three 1/4-in size moist clods of soil to be tested shall be selected from the moistureproof container.

3. Test Procedure

- Fill three glasses about one-third full of distilled water.
- Place one 1/4-in size moist clod in each glass containing distilled water, very carefully, toward side of glass.
- Let stand for one hour without disturbance.
- Observe and record reaction as outlined below:

REACTION TO CRUMB TEST

1. No Reaction: Crumb may slake and run out on bottom of container in flat pile, but no sign of cloudy water caused by colloids in suspension.
2. Slight Reaction: Cloud in water is visible at the surface of the crumb and may extend partially around the bottom of the container, but cloud is not continuous all around the bottom.
3. Moderate Reaction: Cloud of colloids is easily recognizable and extends outward from the crumb to completely encircle the bottom of the container, but does not completely cover the bottom.
4. Strong Reaction: Colloidal cloud covers whole bottom of container, usually in a very thin skin. In some cases, all water in the container becomes cloudy.

4. Presentation of Results

Report the numerical average of reactions for the three clods, rounded to the nearest whole number.

5. Measurement and Payment

The number of crumb tests (three clods will constitute one test) performed and accepted under this contract will be counted. Payment for each test accepted will be made at the agreed-to unit price for Crumb Dispersion Test. This payment will be considered full compensation for all labor, materials, equipment, and incidentals necessary for completion of the work.

TECHNICAL SPECIFICATIONS FOR

PINHOLE DISPERSION TEST

1. Application

This test provides for a direct determination of the dispersibility of certain finegrained soils in which distilled water flows through a small hole punched in a specimen. The test is applicable only to those soils with 12% or more passing the 0.005-mm size and with a plasticity index of 4 or more.

2. Sample Preparation

A. Soil samples must be preserved at their in situ water contents by being shipped and stored in airtight containers.

B. If the soil contains coarse sand or gravel particles, these shall be removed by sieving the soil through a No. 10 (2-mm) sieve.

C. The in situ water content shall be determined and adjusted to that of the Plastic Limit by adding the required distilled water (or by gradually air-drying, if too wet). The pH of the distilled water shall be between 5.5 and 7.0.

3. Procedure

A. The test specimen and the apparatus are shown schematically in figures 1 and 2.

B. The test specimen shall be compacted in the cylinder on top of pea gravel and a wire screen. It shall be compacted in five layers with 16 tamps per layer (15-lb spring) using a Harvard miniature compaction test tamper. This procedure results in about 95% of ASTM D 698A compaction.

C. The plastic nipple shall be pushed into the top of the specimen with finger pressure, and a hole punched in the specimen through the nipple with a 1.0-mm diameter stiff steel wire (hypodermic needle).

D. After the apparatus is assembled. a 2-in (50-mm) hydraulic head is applied to the inlet end of the hamber, causing distilled water to flow horizontally through the 1-mm-diameter hole punched in the specimen.

E. Flow through the pinhole shall be measured as soon as it emerges from the apparatus. The flow shall be measured using a stop watch

and an appropriately sized graduated cylinder (10 ml, 25 ml, or 50 ml is generally used). Flow measurements may be made as often as every 10s, but in no instance less frequently than every 30s. Flow measurements shall be recorded against elapsed time. The flow rates shall also be recorded in units of milliliters per second.

F. The turbidity of the water collected shall be noted and described for each flow rate increment according to the following criteria; very dark, dark, moderately dark, slightly dark, barely visible, or completely clear.

Note: If no flow occurs when the test is started, stop the test, dismantle the inlet end of the apparatus and repunch the hole; or seal the original hole and punch a new one.

G. Continue the test under the 2-in (50 mm) head for at least 5-min. If, at the end of 5 min, the collected water is very dark, dark, or moderately dark, and/or the flow rates have progressively increased to 1.0 to 1.3 ml/s, the test may be stopped. Dismantle the apparatus and carefully extrude the soil specimen from the cylinder. Break open the specimen, transversely and longitudinally, measure and record the diameter of the hole by comparing with the needle (or wire) used to punch the hole. For classification of the results, refer to Section 4 of this specification, entitled Criteria For Evaluating Results.

Note: Extensive testing has shown that the hydraulic capacity of the system using a nipple with a 1.5 mm hole is 1.2 to 1.3 ml/s under a 2-in head. Flow rates greater than this at a 2-in head indicate that the outlet is operating under a partial vacuum condition, or that the actual hydraulic head is greater than 2 in.

H. If, at the end of 5 min of flow at the 2-in head, the turbidity of the collected water is slightly dark or lighter and the flow rate is less than 1.0 ml/s, continue the test for 5 more minutes at the 2-in head.

At the end of this additional 5 min, if the flow is still moderately dark or darker and/or the flow rate is greater than 0.8 ml/s, stop the test. Dismantle the apparatus, and measure and record the diameter of the hole as specified in Step G. For classification of the results, refer to Section 4 of this specification.

I. If the collected flow under the 2-in head has a turbidity of slightly dark or lighter after 10 minutes of flow, and the flow rate is between 0.4 and 0.8 ml/s, raise the hydraulic head to 7 in (180 mm) and continue the test.

J. After 5 min of flow at the 7-in head, if the collected flow has a turbidity of slightly dark or darker and the rate of flow has progressed to 1.4 to 2.7 ml/s, stop the test. For classification, refer to Section 4 of this specification.

K. If, after 5 min of flow at the 7-in head, the collected flow has a barely visible or clear turbidity and the flow rate is between 0.8 and 1.4 ml/s, raise the head to 15 in (380 mm).

L. After 5 min of flow under the 15-in head, if the collected flow has a turbidity described as slightly dark or darker or the flow rate is 1.8 to 3.2 ml/s, stop the test. Dismantle the apparatus, measure and record the diameter of the hole as specified in Step G. For classification of the results, refer to Section 4 of this specification.

M. If, after 5 min of flow under the 15-in head, the turbidity is barely visible or completely clear, and the flow rate is 1.0 to 1.8 ml/s, raise the head to 40 in (1020 mm) and continue the test.

N. After 5 minutes of flow at the 40-in head, the test is complete. Dismantle the apparatus, measure and record the hole diameter as specified in Step G. For classification of the results, refer to Section 4 of this specification.

4. Criteria For Evaluating Results

A. General

The principal differentiation between dispersive and nondispersive soils is given by test results under 2 in of head. If flow under 2-in of head is visibly cloudy and does not become clearer with time, the specimen is failing in the fashion typical of dispersive clays. The main indicator of failure is the colloidal turbidity of the water. Most dispersive clays erode rapidly under 2 in of head, with pronounced turbidity in the water coming through the specimen. For dispersive clays, usually the flow continuously increases and reaches a maximum value limited by the hydraulic capacity of the equipment in 2 to 5 min of flow (about 1.2 to 1.3 ml/s, using the nipple specified).

B. At a Hydraulic Head of 2 In (50 mm)

(1) If, at the end of 5 min of flow, the turbidity of the flow is moderately dark or darker and/or the flow rates have progressively increased to 1.0 to 1.3 ml/s, classify as D-1. The hole measured should be more than 2 times the original diameter.

(2) If, at the end of 10 min of flow, the turbidity is described as slightly dark or darker, and the flow rate is more than 1.0 ml/s, and the hole diameter is more than 1.5 times the original size, classify the results as D-2.

If the flow rate is less than 1.0 ml/s or the hole diameter is less than 1.5 times the original size, but the turbidity is described as slightly dark or darker, classify the results as ND-4.

Note: If the specimen is classed as an ND-4, prepare a new test specimen and rerun the test beginning at the 7-in head.

C. At a Hydraulic Head of 7 In (180 mm)

If, at the end of 5 min of flow, the turbidity of the collected flow is described as slightly dark or darker and the rate of flow as progressively increased to 1.4 to 1.7 ml/s, classify the results as ND-3. The measured hole diameter will usually be greater than 1.5 times the original size. If this is a rerun of an ND-4 specimen and the flow rate is more than 1.4 ml/s, leave the class as ND-4.

D. At a Hydraulic Head of 15 In (380 mm)

If, at the end of 5 min of flow, the turbidity of the collected water is described as slightly dark or darker or the flow rate is more than 1.8 ml/s, classify the results as ND-3. The measured hole diameter should be more than 1.5 times the original size.

E. At a Hydraulic Head of 40 In (1,020 mm)

(1) If, at the end of 5 min of flow, the collected water is anything except completely clear, classify the results as ND-2. The flow rate should be more than 3.0 ml/s and the measureed hole diameter should be less than 1.5 times the original size.

(2) If, at the end of 5 min of flow, the turbidity of the collected water is completely clear, classify the results as ND-1. Flow rates should be less than 3.0 ml/s and the hole diameter should still be about 1 mm.

5. Presentation of Results

The results should be tabulated on forms furnished to the Contractor by the oontracting officer. However, the contractor may use alternative forms if they contain the same data as the furnished forms if they are approved in writing by the contracting officer prior to their use. The original test data sheet or a suitable copy shall also be furnished.

6. Measurement and Payment

The number of pinhole dispersion tests performed and accepted under the terms of this contract will be counted. Payment for each test will be at the agreed-to unit price per test for Pinhole Dispersion Test. These payments shall be considered full compensation for all labor, materials, equipment, and incidentals necessary for completion of the work.

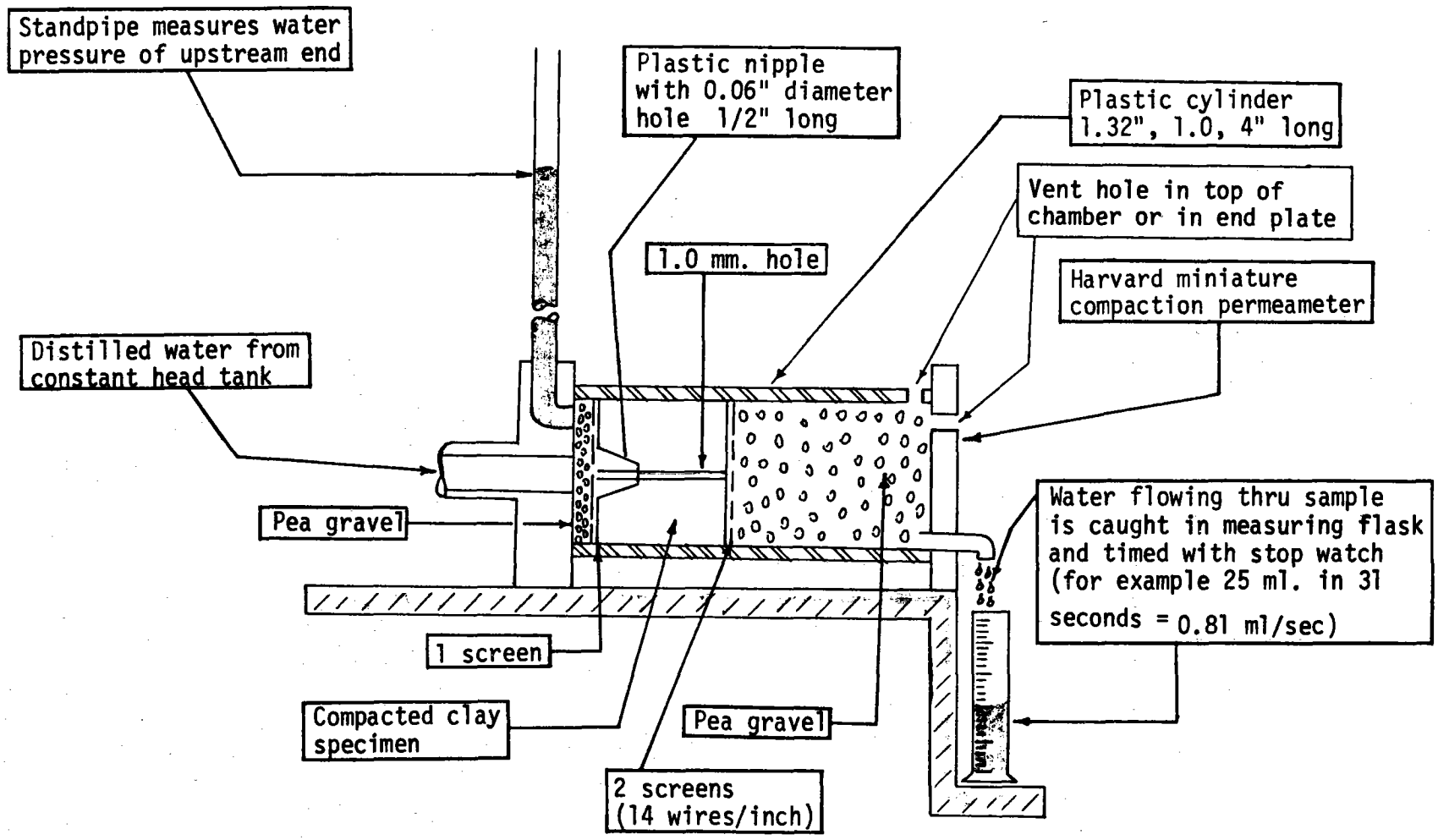

PIN HOLE TEST APPARATUS

NOT TO SCALE

FIGURE 1

Figure 2

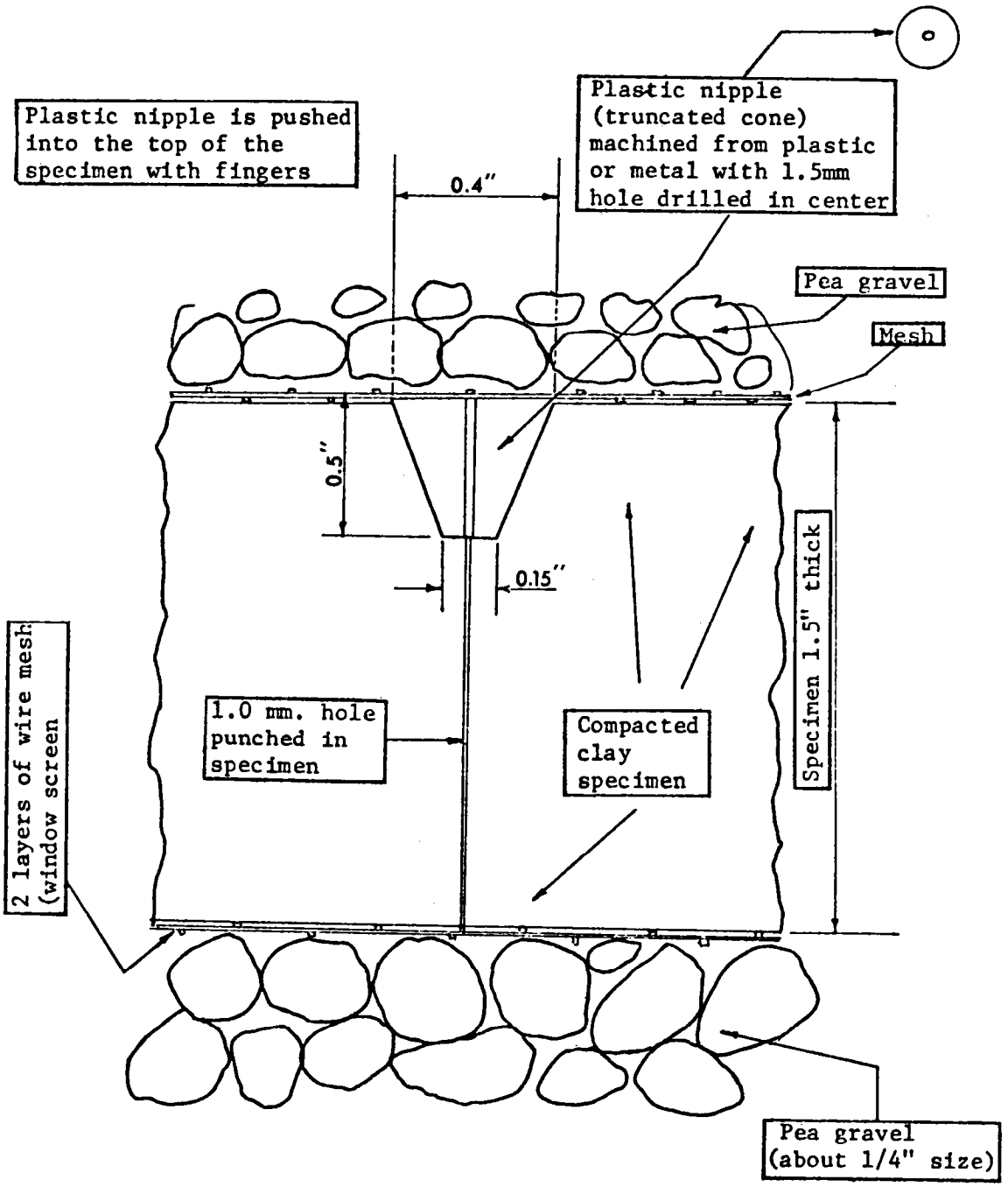

DETAIL OF PIN HOLE TEST SPECIMEN

Figure 3

PINHOLE TEST DATA

Sample No. F79-2816
Compaction Characteristics good
Water Content near optimum
Distilled water added: Yes ✓ or No ____
Curing Time none
State ____
Project ____ Site No. ____

Specimen after test

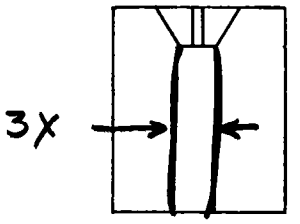

Date 7-9-80
Page 1

Flow started on 1st trial

Clock Time	Head	Flow ml.	Flow sec.	Flow Rate ml/s	Turbidity from Side: Very Dark	Dark	Moderately Dark	Slightly Dark	Barely Visible	Completely Clear	Completely clear from top	Remarks
3:05	2"	10	25	0.4	✓							high colloidal flow
		10	10	1.0	✓							" " "
		25	22	1.14	✓							" " "
		25	21	1.19	✓							" " "
		25	20	1.25	✓							" " "
		25	20	1.25	✓							" " "
		25	20	1.25	✓							" " "
		25	19	1.31	✓							" " "
3:08		25	19	1.31	✓							" " "
												Stopped test -
												obvious failure
												(D-1)

Figure 4

PINHOLE TEST DATA

Sample No. F79-2820
Compaction Characteristics soft specimen
Water Content 19.3%
Distilled water added: Yes ____ or No ✓
Curing Time none
State ____
Project ____ Site No. ____

Specimen after test

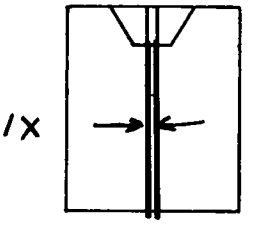

Date 7-80
Page 1

Flow started on 1st trial

Clock Time	Head	Flow ml.	Flow sec.	Flow Rate ml/s	Turbidity from Side: Very Dark	Dark	Moderately Dark	Slightly Dark	Barely Visible	Completely Clear	Completely clear from top	Remarks
9:33	2"	10	22	0.45						✓	✓	Sparkling clear
		10	20	0.5						✓	✓	
		10	19	0.53						✓	✓	
		‡										
9:38		10	19	0.53						✓	✓	
"	7"	25	20	1.25						✓	✓	
		25	20	1.25						✓	✓	
		‡										
9:42		25	20	1.25						✓	✓	
9:43		25	20	1.25						✓	✓	
9:43	15"	50	27	1.85						✓	✓	
		50	27	1.85						✓	✓	
9:45		50	26	1.92						✓	✓	
9:47		50	27	1.85						✓	✓	
		50	26	1.92						✓	✓	
9:48	40"	50	15	3.33						✓	✓	
		50	15	3.33						✓	✓	
		‡										
9:50		50	16	3.13						✓	✓	
		50	16	3.13						✓	✓	
		‡										
9:52		50	15	3.33						✓	✓	
		50	16	3.13						✓	✓	
9:53		50	16	3.13						✓	✓	End Test (ND-1)

TABLE 1.--SUMMARY OF CRITERIA FOR EVALUATING RESULTS

Classification (Table 2)	Head (inches)	Test Time For Given Head (minutes)	Final Flow Rate Through Specimen (m/s)	Turbidity* of Flow at End of Test	Hole Size After Test (Needle Diameters)
D1	2	5	> 1.0	Moderately dark darker	2x
D2	2	10	> 1.0	slightly dark darker	1.5x
ND4	2	10	< 1.0	slightly dark	1.5x
ND3	7 15	5	> 1.4 > 1.8	slightly dark	1.5x
ND2	40	5	> 3.0	Completely clear or barely visible	1.5x
ND1	40	5	< 3.0	completely clear	virtually no erosion

* Use very dark, dark, moderately dark, slightly dark, barely visible, or completely clear.

TABLE 2.--CATEGORIES OF TEST RESULTS

Classification of Individual Test Results	Classification of Soil
D1 and D2	Dispersive soils: fall rapidly under 2-in head.
ND4 and ND3	Intermediate soils: erode slowly under 2-in or rapidly under a 7-in head and/or under a 15-in head.
ND2 and ND1	Nondispersive soil: no colloidal erosion under 15-in or 40-in head.

TECHNICAL SPECIFICATIONS FOR

SPECIFIC GRAVITY TESTS

ON THE MINUS NO. 10 FRACTION

1. Preparation of Samples

Soil used in this test shall be prepared in accordance with ASTM D 421 and shall be processed further so that only material smaller than the No. 10 sieve is used.

2. Test Procedures

Test procedures used shall be in accordance with ASTM D854, except as noted in Item 1. above.

3. Presentation of Test Results

Test results shall be recorded on forms furnished to the contractor by the contracting officer. However, the contractor may use alternative forms if they contain the same data as the furnished forms if they are approved in writing by the contracting officer prior to their use. The values shall be recorded to the nearest hundredth (for example, 2.68). In addition, the original work data sheet, or a copy thereof, shall be furnished to the contracting officer.

4. Measurement and Payment

The number of specific gravity tests performed on the Minus No. 10 fraction of a soil and accepted under the terms of this contract will be counted. Payment for each test accepted will be made at the agreed-to unit price per test for Specific Gravity Test on the Minus No. 10 Fraction. This payment will be considered full compensation for all labor, materials, equipment, and incidentals necessary for completion of the work.

TECHNICAL SPECIFICATIONS FOR SPECIFIC GRAVITY TESTS ON THE PLUS NO. 4 FRACTION

1. Application

This test is designed to determine the specific gravity of rock materials greater than the No. 4 sieve. It shall be run on this fraction of any soil that contains more than 35% greater than the No. 4 sieve.

2. Preparation of Samples

Samples for this test will be prepared in accordance with ASTM D 421.

3. Test Procedure

The specific gravity of the Plus No. 4 fraction of a soil sample shall be determined in accordance with ASTM C 127.

4. Presentation of Test Results

Test results for the bulk specific gravity, bulk specific gravity (Saturated-Surface Dry Basis), the apparent specific gravity, and the percent absorption shall be recorded on forms furnished to the contractor by the contracting officer. However, the contractor may use alternative forms if they contain the same data as the furnished forms if they are approved in writing by the contracting officer prior to their use. In addition, the original work data sheet, or a copy thereof, shall be furnished to the contracting officer.

5. Measurement and Payment

The number of specific gravity tests on the Plus No. 4 fraction performed and accepted under the terms of this contract will be counted. Payment for each test accepted will be made at the agreed-to unit price per test for Specific Gravity Tests on Plus No. 4 Fraction. This payment will be considered full compensation for all labor, materials, equipment, and incidentals necessary for completion of the work.

TECHNICAL SPECIFICATIONS FOR STANDARD PROCTOR WATER CONTENT-DENSITY TEST

1. Preparation of Samples

Samples for this test shall be prepared in accordance with ASTM D421 except as noted in ASTM D 698.

2. Test Procedure

The moisturedensity relationship of the soil sample shall be determined in accordance with ASTM D 698, Method A, unless otherwise specified and in accordance with the following special requirements:

a. A minimum of five points shall be used to define the water content-density curves. At least two points shall fall above the optimum water content and at least two points shall fall below the optimum water content.
b. Develop the water content-density curve on the wet side of optimum to densities below 95% of the maximum density.
c. If the sample contains more than 35% gravel, use Method C or D, as appropriate.
d. A test is defined as the completion of one water content-density curve.

3. Presentation of Test Results

Test results showing the wet density, dry density, and water content for each point shall be recorded on forms to be furnished to the contractor by the contracting officer. The dry and wet densities shall be expressed in pounds per cubic foot to the nearest tenth, and the optimum water content shall be expressed in percent to the nearest tenth. Plotted curves showing the test results shall be plotted on forms furnished to the contractor by the contracting officer. The zero air voids, or 100% saturation curve, shall also be plotted. However, the contractor may use alternative forms if they contain the same data as the furnished forms if they are approved in writing by the contracting officer prior to their use. In addition, the original work data sheet, or a copy thereof, shall be furnished to the contracting officer.

4. Measurement and Payment

The number of moisturedensity tests performed and accepted under terms of this contract will be counted. Payment for each test accepted will be made at the agreed-to unit price per test for Standard Proctor Moisture Density Tests. This payment will be considered full compensation for all labor, materials, equipment, and incidentals necessary for completion of the work.

TECHNICAL SPECIFICATIONS FOR

MAXIMUM INDEX DENSITY OF SOILS USING A VIBRATORY TABLE*

1. Test Procedure

The maximum index density for cohesionless, free draining soils containing 12% or less passing the No. 200 sieve shall be determined in accordance with ASTM D 4253.

2. Presentation of Test Results

The maximum density obtained shall be rounded to the nearest 0.5 lb/ft^3 and shall be recorded on forms to be furnished by the contracting officer to the contractor. However, the contractor may use alternative forms if they contain the same data as the furnished forms if they are approved in writing by the contracting officer prior to their use. The original data sheet or a suitable copy shall be furnished to the contracting officer.

3. Measurement and Payment

The number of maximum index density tests performed and accepted under terms of this contract will be counted. Payment for each test accepted will be made at the agreed-to unit price per test for Relative Density of Cohesionless Soils. This payment will be considered full compensation for all labor, materials, equipment, and incidentals necessary for the completion of the work.

* This test was formerly covered by ASTM D 2049, Relative Density of Cohesionless Soils.

TECHNICAL SPECIFICATION FOR MINIMUM INDEX DENSITY OF SOILS AND CALCULATION OF RELATIVE DENSITY*

1. Test Procedure

The minimum index density and relative density for cohesionless, free draining soils containing 12% or less passing the No. 200 sieve shall be determined in accordance with ASTM D 4254.

2. Presentation of Test Results

The minimum density obtained shall be rounded to the nearest 0.5 lb/ft^3 and shall be recorded on forms to be furnished by the contracting officer to the contractor. However, the contractor may use alternative forms if they contain the same data as the furnished forms if they are approved in writing by the contracting officer prior to their use. The original data sheet or a suitable copy shall be furnished to the contracting officer.

3. Measurement and Payment

The number of minimum index density tests performed and accepted under terms of this contract will be counted. Payment for each test accepted will be made at the agreed-to unit price per test for Relative Density of Cohesionless Soils. This payment will be considered full compensation for all labor, materials, equipment, and incidentals necessary for the completion of the work.

*This test was formerly covered by ASTM D 2049, Relative Density of Cohesionless Soils.

TECHNICAL SPECIFICATIONS FOR UNCONFINED COMPRESSIVE STRENGTH OF COHESIVE SOIL

1. Application

This specification covers the determination of the unconfined compressive strength of cohesive soils in the undisturbed and remolded conditions, using either stresscontrolled or straincontrolled loading. This test is often referred to as a q_u test.

2. Procedure

Testing procedures shall be in accordance with ASTM D 2166.

3. Presentation of Data

The results shall be plotted on forms furnished to the contractor by the contracting officer. However, the contractor may use alternative forms if they contain the same data as the furnished forms if they are approved in writing by the contracting officer prior to their use. As a minimum, the following information shall be shown:

a. Initial dry density, moisture content, and percent of saturation.

b. Size of sample.

c. Height to diameter ratio.

d. Type of sample.

e. Visual description of the soil.

f. Stressstrain curve.

g. Strain at failure.

h. Unconfined compressive strength.

i. Any unusual conditions that affect the test interpretation.

j. Original test data sheets or suitable copies.

4. Measurement and Payment

The number of unconfined compression tests performed and accepted under the terms of this contract will be counted. Payment for each test will be at the agreed-to unit price per test for Unconfined Compressive Strength of Cohesive Soils. These payments will be considered full compensation for all labor, materials, equipment, and incidentals necessary for completion of the work.

TECHNICAL SPECIFICATIONS FOR

DIRECT SHEAR TESTS OF SOILS UNDER CONSOLIDATED, DRAINED CONDITIONS

1. Application

This specification covers the direct shear testing of soils under consolidated, drained conditions. Direct shear tests are normally used for nonplastic soils that cannot be trimmed or remolded for triaxial shear tests or on soft clays, but are not limited to these type of soils.

2. Procedure

This test shall be performed in accordance with ASTM D 3080 or U.S. Army Corps of Engineers EM111021906, Appendix IX, except as noted below:

a. The minimum size for square specimens shall be 2 in X 2 in.

b. The minimum size for round specimens shall be 2.5 in in diameter.

c. Thicknesses of 3/4 in or larger shall be used.

d. A minimum of three specimens shall constitute a test.

3. Presentation of Test Results

Consolidated, drained, direct shear test results shall be plotted on forms provided to the contractor by the contracting officer. However, the contractor may use alternative forms if they contain the same data as the furnished forms if they are approved in writing by the contracting officer prior to their use. The original data work sheets, or suitable copies, shall be furnished to the contracting officer.

4. Measurement and Payment

The number of drained direct shear tests performed and accepted under this contract will be counted. Payment for each test accepted will be made at the agreed-to unit price per test for Direct Shear Tests of Soils Under Consolidated Drained Conditions. This payment will be considered full compensation for all labor, materials, equipment, and incidentals necessary for completion of the work.

TECHNICAL SPECIFICATIONS FOR

TRIAXIAL COMPRESSION TEST

1. Application

This specification covers the triaxial compression tests of soils with controlled drainage and consolidation conditions to determine the following shear strength:

a. Unconsolidated, Undrained (UU or Q Tests)

b. Consolidated, Undrained (CU or R Tests)

c. Consolidated, Undrained with pore pressure measured ($\overline{CU}$ or $\overline{R}$ Tests)

d. Consolidated, Drained (CD or S)

Note: If properly run, the shear strengths obtained in c and d are the same for most soils.

2. Procedure

Tests shall be performed in accordance with U.S. Army Corps of Engineers EM111021906, Appendix X, except as modified in Attachment #1 to this specification. Except as noted in the Special Requirements section of this specification, only $\overline{CU}$ or $\overline{R}$ will be required.

An acceptable procedure for back pressure saturation is provided in Attachment #2 of this specification.

An acceptable alternative molding procedure, floating mold compaction, is provided in Attachment #3 of this specification.

3. Special Requirements

a. Unconsolidated, undrained tests (UU or Q) will be required on embankment materials at the highest likely placement water content and on foundation materials at saturation, if sampling and testing reveal the presence of foundation strata that might cause end-of-construction slope stability analysis to be critical.

b. Shear tests on materials with maximum particle sizes less than 3/4-in diameter will be triaxial compression tests, except for those nonplastic soils that cannot be trimmed or remolded for triaxial testing, in which case, direct shear tests will be required. Substitution of direct shear tests for triaxial tests must have the written approval of the contracting officer.

c. The specimen diameter shall be a minimum of 8 to 10 times the maximum size particle to be tested. The ratio of height to diameter of the specimens shall be 1½ to 2.

d. Triaxial, consolidated, undrained tests with pore pressures measured ($\overline{CU}$) shall be performed on representative samples of materials proposed for use in each zone of the embankment. Tests will usually be performed on saturated samples, but tests may be performed at highest probable placement moisture to represent embankment materials above the fully developed phreatic line.

e. Triaxial, consolidated, undrained tests with pore pressures measured ($\overline{CU}$) shall be performed on critical and representative foundation samples, except as noted in #1. above.

f. Saturation shall be considered satisfactory if a "B" parameter of 0.95 or higher is measured within a response time of 1 minute, or if a minimum of 95% of theoretical saturation is achieved.

g. Samples shall be tested to a minimum of 15% strain, and the stress-strain curves will be included in the report.

h. The maximum principal effective stress ratio ($\bar{\sigma}_1/\bar{\sigma}_3$) or the maximum deviator stress may be used as the failure criterion. If these two methods are used, the failure criterion must not exceed 15% strain. A pq diagram (stress path) may be used to define the failure envelope.

i. A minimum of three separate acceptable specimens shall constitute a test and shall be used to define the Mohr diagrams.

j. If all three test specimens are not obtained from the same horizontal interval of a core sample, index tests will be required on each specimen to show that similar materials were or were not tested.

k. Water content, dry density both before and after testing, and a "B" parameter (when measured) will be determined and reported for each specimen.

l. Visual differences between specimens shall be noted and visual failure condition of each specimen shall be noted and reported.

m. Multistage triaxial shear testing will not be acceptable.

4. Presentation of Test Results

The test results shall be plotted on forms provided to the Contractor by the contracting officer. However, the contractor may use alternative forms if they contain the same data as the furnished forms if they are approved in writing by the contracting officer prior to their use. As a minimum, the following information shall be provided:

a. Stress-strain curves for each specimen. (Minimum of three specimens required.)

b. Pore pressure vs. strain curves for each specimen.

c. A pq (stress path) diagram will be plotted for each specimen when $\overline{CU}$ tests are run.

d. Water contents and dry densities, both before and after testing, shall be determined and shown on the forms.

e. "B" parameter or % saturation. (B parameter not required for UU tests.)

f. Plot of Mohr's circle envelopes for both total and effective stress.

g. Failure criteria used.

h. Strain rate used and amount of back pressure used.

i. Proper sample identification.

j. Original data worksheets or suitable copies.

5. Measurement and Payment

The number of UU (Q), CU (R), $\overline{CU}$ ($\overline{R}$), and CD (S) tests performed and accepted under the terms of this contract will be counted. Payment for each UU (Q) and for each CU (R) test accepted will be at the agreed-to unit price for Triaxial Compression Test, UU (Q) and CU (R). Payment for each $\overline{CU}$ ($\overline{R}$)test accepted will be at the agreed-to unit price for Triaxial Compression Test, $\overline{CU}$ ($\overline{R}$) Payment for each CD (S) test accepted will be at the agreed-to unit price for Triaxial Compression Test, CD (S).

These payments will be considered full compensation for all labor, materials, equipment, and incidentals necessary for completion of the work.

ATTACHMENT 1

TECHNICAL SPECIFICATIONS FOR

TRIAXIAL COMPRESSION TEST

Re: U.S. Army Corps of Engineers EM 111021906, Appendix X.

1. Item 3.b., Triaxial Compression Chamber, pp. X4 through X6.
   Note: Triaxial compression chambers like Wykehem Farrance Model WF 10210 are acceptable when the actual piston friction is measured before the start of the test, as outlined in (2) on Page X6.

2. Item 3.d., Rubber Membranes, pp. X7 through X8.
   Note: Prophylactics are made of very thin rubber and make excellent membranes. Sheik No. 23 (Brand name and number) is an example of an acceptable prophylactic. A double thickness (two per specimen) is suggested. Sealing with two O-rings at each end is also recommended.

3. Item 4.a.(2), "Compacting Specimens of Cohesive Soil," pp. X14, 15.
   Note: The floating mold compaction procedure outlined in Attachment No. 3 may be used.

4. Item 5.b.(4), Computations, p. X25.
   Note: No membrane correction is necessary when using rubber membrane like Sheik No. 23 prophylactics.

5. Item 7.b.(1)(6), "Procedure for CU or R Test," pp. X33 through X36.
   Note: An alternate procedure for back pressure saturation, leak checks, and for obtaining B parameters is given in Attachment No. 2.

6. Item 7.b.(7), "Procedure for $\overline{CU}$ or $\overline{R}$ Test," p. X36.
   Note: If pore pressure measurements are to be made, refer to "The Triaxial Test" by Bishop and Henkel, pp. 192204, for allowable strain rates. For many soils, a strain rate of 0.002 in/min on 1.4-in diameter X 3-in high specimens is satisfactory if filter strips are used.

7. Item 7.c.(6), Computations, pp. X38.
   Note: Membrane correction is not necessary if prophylactics like Sheik No. 23 are used.

8. Item 8.a. Apparatus.
   Note: Controlled strain can be used for relatively impervious soils if a slow enough strain rate is used.

9. Item 8.b.(2), Procedure.
   Note: The time to failure required for a drained test can be estimated by multiplying the t_{50} time by 50. The t_{50} time can be determined from the volume change vs. time plot determined during the consolidation phase of the test.

ATTACHMENT 2

PROCEDURE FOR BACK PRESSURE SATURATION

1. The magnitude of the required back pressure may be computed as follows:

$$U_b \ (kg/cm^2) = \frac{100 - S}{2}$$

where S is the degree of saturation of the test specimen expressed as a percent

$$kg/cm^2 \times 14.223 = psi$$

2. To reach saturation, the chamber pressure and the back pressure are increased in increments. The number of increments required will depend on the back pressure required. The size of each increment will depend on the consolidating pressure that will be used.

3. The upper limit ($\bar{\sigma}_U$) of each increment shall not be more than onehalf of the consolidating pressure. A value less than onehalf is suggested where consolidating pressures are less than 50 psi.

4. The lower limit ($\bar{\sigma}_L$) must be high enough to insure that the membrane on the specimen is not blown out. A minimum of 3 psi and a maximum of 5 psi are suggested.

5. Start the back pressure saturation by applying a chamber pressure and a back pressure with the drain valves closed.

   The chamber pressure applied should equal 7 psi or onehalf of the upper limit for each increment, whichever is smaller.

   The back pressure applied should equal the difference between the chamber pressure applied and the lower limit, or zero, whichever is greater.

6. Open the drain valves and plot burette and axial dial readings vs. logarithm of time until water has essentially stopped entering the specimen.

7. Close the drain valve.

8. Increase the chamber pressure to the upper limit determined in Step 3 and increase the back pressure by an amount equal to the upper limit minus the lower limit.

9. Repeat Steps 6 and 7.

10. Increase both the chamber pressure and the back pressure in increments equal to the upper limit minus the lower limit. Repeat Steps 6 and 7.

11. Repeat Step 10 until the back pressure has been increased to the desired value. (Note that during the final saturation step the increase in chamber pressure and back pressure might have to be less than $[\bar{\sigma}_U - \bar{\sigma}_L]$ in order to achieve the desired final value of U_b.)

12. Following Step 11, close the drain valve. Increase the chamber pressure about 5 to 10 psi to verify the completeness of saturation. If the measured increase in pore pressure (ΔU) immediately is equal to the applied increase in chamber pressure ($\Delta\bar{\sigma}$), $\bar{B} = \frac{\Delta U}{\Delta\bar{\sigma}}$ is unity and the test specimen and the system are completely saturated.

    An increase in pore water pressure less than the applied cell pressure is due either to air still remaining in the sample and/or pore water lines or to the stiffness of the sample.

13. Following the saturation check, monitor the porewater pressure as a function of time to determine if there are any leaks in the system. An external leak shows up as an approximately constant rate of pore pressure drop with time, whereas an internal leak causes an approximately constant rate of increase with time.

14. If the saturation check indicates a $\bar{B}$ parameter less than unity, repeat Step No. 10.

15. Repeat Step 12. If the new value of $\bar{B}$ is larger than the first value obtained at the lower back pressure but still less than unity, the system is not yet completely saturated. Repeat Step 14.

    If the new value of Bis still less than unity but equal to the value obtained at the lower back pressure, the system is completely saturated.

16. When it is determined that the system is completely saturated, increase the chamber pressure to a value equal to the back pressure plus the consolidating pressure.

17. Repeat Step 6 and allow consolidation to proceed well into the secondary consolidation phase.

18. Following the consolidation period, close the drain valve, and monitor pore pressure as a function of time to determine if consolidation is complete and to determine if there are any leaks in the system. Leaks will be evident as outlined in Step 13. Residual pore water pressure caused by incomplete consolidation will be evident by an increase in pore pressure that does not change with time.

19. If all checks are satisfactory, start the axial loading.

ATTACHMENT 3

FLOATING MOLD COMPACTION

The floating mold equipment is shown in figure 1. It consists of two plungers which compress the soil inside a split steel mold. The mold floats between the two plungers, with its weight entirely supported by friction against the soil. This procedure differs from the standard laboratory method of static compaction in one very important way. With this method, the final length of the specimen is controlled by means of an external jig. This allows both plungers to move right up to the instant that the final compaction is achieved and helps to insure that the specimen is compacted equally from both ends. The SCS procedure is to form the specimen in two sections initially and then press the two sections together for the test specimen.

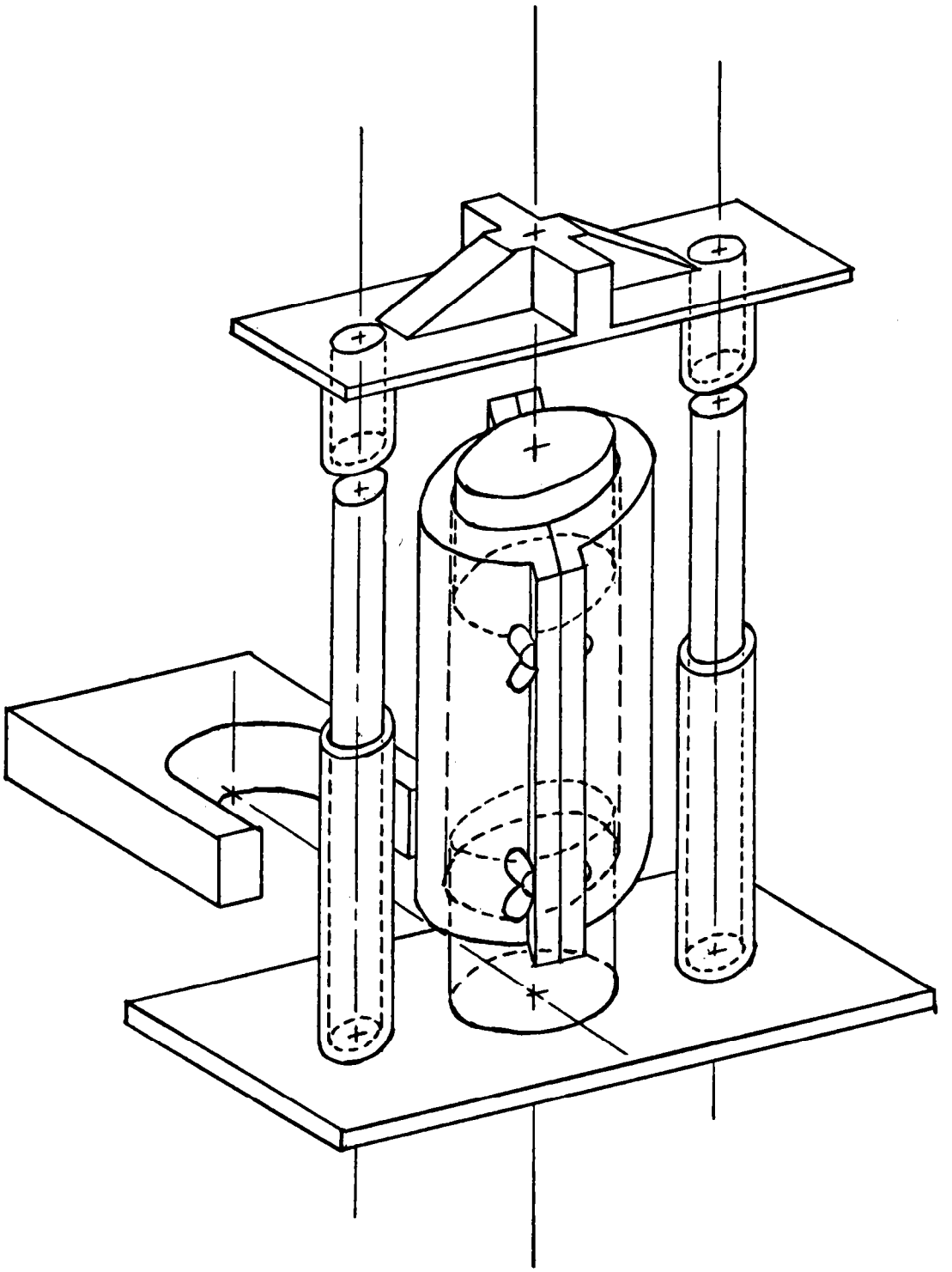

FIGURE 1. FLOATING MOLD COMPACTION DEVICE

TECHNICAL SPECIFICATIONS FOR

DRAINED, REPEATED DIRECT SHEAR TEST (RESIDUAL)

1. Application

This specification covers the direct shear testing of soils to obtain their residual shear strength. The test is normally used for shaley clays and clay shales where residual shear strength will control the design.

2. Procedure

This test shall be performed in accordance with U.S. Army Corps of Engineers EM111021906, Appendix IX A, except as noted below.

a. The minimum size for square specimens shall be 2 in X 2 in.

b. The minimum size for round specimens shall be 2.5 in in diameter.

c. Thicknesses of 3/4 in or larger shall be used.

d. A minimum of three specimens shall constitute a test.

3. Presentation of Test Results

Drained, repeated direct shear test results shall be plotted on forms provided to the contractor by the contracting officer. However, the contractor may use alternative forms if they contain the same data as the furnished forms if they are approved in writing by the contracting officer prior to their use. The original data work sheets, or suitable copies, shall also be furnished to the contracting officer.

4. Measurement and Payment

The number of drained, repeated direct shear tests performed and accepted under this contract will be counted. Payment for each test accepted will be made at the agreed-to unit price per test for Drained, Repeated Direct Shear Test -- (Residual). This payment will be considered full compensation for all labor, materials, equipment, and incidentals necessary for completion of the work.

TECHNICAL SPECIFICATIONS FOR

ONE-DIMENSIONAL CONSOLIDATION PROPERTIES OF SOILS -- SATURATED AT START OF TEST

1. Application

This specification covers the consolidation testing of undisturbed foundation samples and remolded embankment samples. It is intended to represent the consolidation potential of soils that are or will be subject to complete saturation in the field.

2. Procedure

This test shall be performed in accordance with ASTM D 2435, with the following exceptions and/or additions:

a. The minimum specimen size shall be 21/2 in in diameter.

b. Foundation samples and fill samples below the line of saturation will be saturated at the start of the test.

c. Load increments will be added until 32,000 psf is reached or until the straight-line, or virgin, portion of the void ratio-pressure curve is obtained.

d. At least one point will be determined on the unload or rebound portion of the void ratio-pressure curve for foundation samples.

e. Water content, density, and degree of saturation will be determined both before and after testing. (This will require a specific gravity determination.)

3. Presentation of Test Results

Consolidation results will be plotted as void ratio vs. log of pressure on forms provided to the contractor by the contracting officer. However, the contractor may use alternative forms if they contain the same data as the furnished forms if they are approved in writing by the contracting officer prior to their use. Original test data sheets, or suitable copies, shall be furnished to the contracting officer.

Overburden pressure, preconsolidation pressure (if any) and compression index shall be shown on this plot. The coefficient of consolidation shall be computed and shown on the plot. The compression index, C_c, and the recompression index, C_r, shall also be shown. The initial test dry unit weight and initial water content shall also be stated.

All consolidation-time curves shall be plotted on forms provided by the contracting officer. However, the contractor may use alternative forms if they contain the same data as the furnished forms if they are approved in writing by the contracting officer prior to their use.

4. Measurement and Payment

The number of consolidation tests performed and accepted under the terms of this contract will be counted. Payment for each test accepted will be made at the agreed-to unit price per test for One-Dimensional Consolidation Properties of Soils Saturated at Start of Test. This payment will be considered full compensation for all labor, materials, equipment, and incidentals necessary for completion of the work.

TECHNICAL SPECIFICATIONS FOR

ONE-DIMENSIONAL CONSOLIDATION PROPERTIES OF SOILS -- SATURATED DURING TESTING

1. Application

This specification covers the consolidation testing of fill materials that will not be subject to complete saturation, of foundation materials susceptible to collapse when loaded and/or wetted, or of materials expected to swell when wetted.

2. Procedure

The test shall be performed in accordance with ASTM D 2435, with the following exceptions and/or additions:

a. Proposed embankment soils (disturbed samples) that will be placed above the zone of saturation shall be tested initially at a water content approximating the estimated field placement moisture.

b. For foundation soils, an indication of the possibility of collapse may be obtained by plotting the in situ dry unit weight vs. the in situ water content on Attachment #1 to this specification. If the plot falls within the Intermediate or Collapsible Zones, the specimen should be tested using this specification. Foundation samples shall be tested initially at their natural water content up to the expected load. Once the expected load is applied and the normal readings are obtained, the test specimen is then saturated under this same load. The readings are taken and the test is resumed with the remaining loads applied to the saturated specimen. The contracting officer shall be notified when the plot of in situ dry unit weight vs. the in situ water content indicates a collapse potential. No test shall be started under this specification without the approval of the contracting officer.

c. The minimum specimen size shall be 2½ in in diameter.

d. Load increments will be added to 32,000 psf or until the straightline, or virgin, portion of the void ratiopressure curve is obtained.

e. At least one point will be determined on the unload or rebound portion of the void ratiopressure curve for foundation samples.

f. Water content, density, and degree of saturation will be determined both before and after testing. (This will require a specific gravity determination.)

3. Presentation of Test Results

Consolidation results will be plotted as void ratio vs. log of pressure on forms provided to the contractor by the contracting officer. However, the contractor may use alternative forms if they contain the same data as the furnished forms if they are approved in writing by the contracting officer prior to their use.

Overburden pressure, preconsolidation pressure (if applicable) and compression index (if applicable) shall be shown on this plot. The percent swell or collapse upon saturation shall also be shown on the plot. Information on the initial dry unit weight and moisture content shall be included.

All consolidation vs. time curves shall be plotted on forms provided by the contracting officer. However, the contractor may use alternative forms if they contain the same data as the furnished forms if they are approved in writing by the contracting officer prior to their use.

4. Measurement and Payment

The number of consolidation tests performed and accepted under the terms of this contract will be counted. Payment for each test accepted will be made at the agreed-to unit price per test for One-Dimensional Consolidation Properties of Soils -- Saturated During Testing. This payment will be considered full compensation for all labor, materials, equipment, and incidentals necessary for completion of the work.

SCS-SM-TEST E1.A
Attachment 1

MATERIALS TESTING REPORT	U. S. DEPARTMENT of AGRICULTURE SOIL CONSERVATION SERVICE	SML EVALUATION OF COLLAPSE POTENTIAL
PROJECT and STATE	BY	DATE

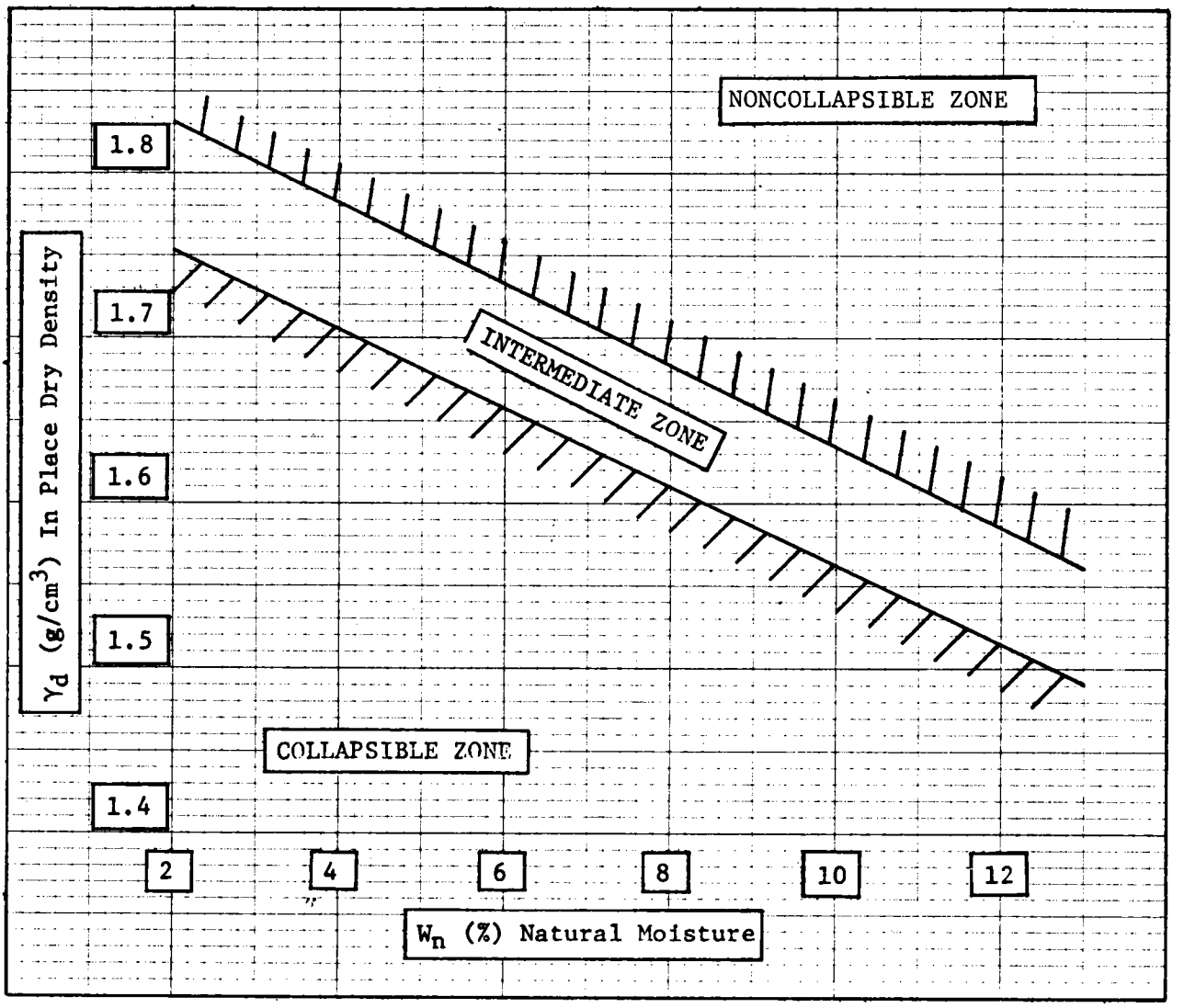

REMARKS

TECHNICAL SPECIFICATIONS FOR

PERMEABILITY

1. Test Procedure

Permeability tests shall be performed in accordance with the U.S. Army Corps of Engineers EM 111021906, Appendix VII. The appropriate type of permeability test performed will be determined based on the material to be tested and the range of permeabilities expected as outlined in the above reference. Tests may also be run in accordance with Designations E13 and E14, Earth Manual, Bureau of Reclamation.

2. Presentation of Test Results

The coefficient of permeability, k, shall be reported in units of feet per day and shall be reported to two significant digits (0.176 would be 0.18). The results, along with all the pertinent test information, shall be recorded on forms to be furnished to the contractor by the contracting officer. However, the contractor may use alternative forms if they contain the same data as the furnished forms if they are approved in writing by the contracting officer prior to their use. The type of test used will be stated and the test procedure referenced. The original data sheet, or a suitable copy, will be furnished to the contracting officer.

3. Measurement and Payment

The number of permeability tests performed and accepted under the terms of this contract will be counted. Payment for each test accepted, regardless of the type of test run, will be made at the agreed-to unit price per test for Permeability. This payment will be considered full compensation for all labor, materials, equipment, and incidentals necessary for the completion of the work.

SUBPHASE _____ GEOTECHNICAL ANALYSIS AND RECOMMENDATIONS REPORT

Scope: The contractor shall evaluate the results of the geological investigation and the soil mechanics testing program and perform the necessary analyses to develop a Geotechnical Report. The analysis and report shall be in accordance with the requirements of the following subparts of this specification and shall be adequate to provide design, construction, and monitoring recommendations for all elements of the project.

General Requirements:

Completion of this subphase shall result in a complete Geotechnical Report which summarizes all analyses made and recommendations for the design, construction, and monitoring of the structure(s). The report shall include all information required in the appropriate subparts of this specification and any other material considered by the contractor to be relavent to the design. Unless otherwise specified, computations and other material adequate to document the work shall be furnished to the contracting officer.

An original report and ____ copies shall be furnished to the contracting officer.

The contracting office may furnish the contractor with a sample report to be used as a guide.

Measurement and Payment:

Payment will be made at the "job" price established in the contract when the completed report and copies are furnished to and accepted by the contracting officer. Such payment will constitute full compensation for all labor, equipment, tools, and other items necessary and incidental to the completion of the work.

SUBPART A SUMMARY OF MATERIAL/SITE PARAMETERS

Scope: The contractor shall summarize site parameters and material parameters that affect the design of the project.

Procedures:

The completed Geotechnical Report shall include a summary of material strength, consolidation, permeability, and identification properties. The summary shall include, as appropriate, sections on foundation bedrock, foundation soils, proposed embankment fill materials, and emergency spillway materials.

The basis for any assumed parameters shall be adequately documented if not substantiated by actual borings, field, or laboratory tests.

Presentation of Results:

The report shall include a narrative summary accompanied by appropriate visual aids (sketches and/or drawings) and tabular summaries of data.

SUBPART B FOUNDATION CUTOFF

Scope: The contractor shall provide recommendations for the design of a foundation cutoff for the project.

Procedures:

Based on results of the geological investigation, field permeability tests, laboratory permeability tests, and estimates of permeability, the contractor will identify foundation conditions that affect the cutoff design. Recommendations for the design of the cutoff shall include: (1) location with respect to centerline, (2)
depths recommended along the embankment alignment, (3) side slopes and bottom width recommendations, (4) recommended backfill material and method of placement, (5) recommended methods of dewatering, if appropriate, and (6) surface treatment of bottom and/or side slopes when excavated into fractured bedrock.

If a cutoff method other than a conventional, rolledfill cutoff is recommended, or if a partial cutoff, reservoir blanketing, or other alternatives are recommended, the contractor shall include rationale for selection of the alternative method. Justification shall include both economic and technical consideration.

Presentation of Results:

The contractor shall show recommended cutoff depths on a plotted cross-section of the alignment that includes plotted logs of test holes. If other alternatives are recommended, a narrative accompanied by appropriate visual aids will be provided in sufficient detail to form the basis for design of the recommended features.

SUBPART C FOUNDATION PREPARATION (SOIL)

Scope: The contractor shall provide recommendations for any special foundation preparation procedures, including removal, preloading, staged construction, dewatering, etc.

Procedures:

Recommendations for treatment of soil foundations preparatory to construction shall be based on results of field and/or laboratory tests, soil mechanics analyses and site geology.

Recommendations for removal of undesirable material shall include: (1) rationale for the recommendation; (2) the extent, both lateral and vertical, of recommended removal; (3) suggested field procedures for identifying materials to be removed, and (4) alternative methods of treatment considered.

Recommendations for methods other than removal for treating undesirable foundation soils shall include: (1) rationale for selection of the alternative, including cost considerations; and (2) details of recommended procedures adequate for design.

Presentation of Results:

Foundation removal shall be identified on a plotted cross section of the alignment that includes plotted logs of test holes. Other design parameters may be included in a narrative report.

Recommendations for treatment methods other than removal shall be included in the narrative report and shall be accompanied by sufficient graphical or visual material to provide an adequate basis for design.

SUBPART D FOUNDATION PREPARATION (ROCK)

Scope: The contractor shall provide recommendations for treatment of rock foundations necessary to protect the structure and, if applicable, to provide a cutoff of seepage.

Procedures:

Recommendations shall be based on the nature of bedrock materials as determined from the foundation investigation and the appropriate laboratory tests and analyses performed.

Recommendations for pressure grouting, dental grouting, slush grouting, gunnite protection, cleaning operations, or other special treatments shall include: (1) rationale for selection of the method or methods of treatment, including cost considerations; and (2) details of the treatment methods adequate to provide the basis for design.

Presentation of Results:

A narrative summary of the rationale and the treatment methods recommended shall be included. For complicated foundation problems requiring extensive treatment, the narrative shall be accompanied by graphical and/or tabular illustrations.

SUBPART E PRINCIPAL SPILLWAY CONSIDERATIONS

Scope: The contractor shall provide recommendations for the design and installation of the principal spillway conduit.

Procedures:

Recommendations shall include: (1) preparation of the soil or rock foundation for the conduit, (2) parameters for estimating joint gap by procedures in TR-18, (3) parameters for calculating loading on the conduit by procedures of in TR-5, (4) drainage measures considered necessary to provide protection against piping along the conduit, and (5) type and placement methods for backfill to be used around the conduit if different from recommendations for the remainder of the embankment.

Presentation of Results:

A narrative summary of recommendations shall be included in the report. Necessary computations and a narrative documentation to support the method of selection of joint gap parameters and pipeloading parameters shall be included.

SUBPART F EMBANKMENT ZONING AND PLACEMENT OF MATERIALS

Scope: The contractor shall provide recommendations for an embankment zoning plan and for placement of materials, including specified placement densities and moisture contents, placement methods, drainage or transition zones, and inspection construction control guidelines.

Procedure:

Based on the types of soil/rock materials available, relative quantities of each, their sequence of availability during construction, and engineering properties, the contractor will devise a zoning plan to guide placement of these different types of materials in appropriate zones of the embankment. The zoning plan shall: (1) reflect the quantities of available types of material in the proportioning of zones; (2) consider the sequence in which materials will become available during construction; (3) include recommended placement densities and moisture content and/or placement methods for each type of material used; and (4) include recommendations for types of field inspection tests for each material type.

The zoning plan will consider the need for any transition filters and/or drains between zones and include recommendations for their design if applicable.

The zoning plan shall conform to the requirements on in TR-60.

Presentation of Results:

A schematic illustration of the recommended zoning plan and a tabular summary of placement recommendations shall be included in the report.

A narrative summary of rationale used in developing the zoning plan and other significant recommendations shall be included in the report.

SUBPART G SLOPE STABILITY ANALYSES

Scope: The contractor will perform slope stability analyses summarize results of the analyses, and provide recommendations for design features necessary to satisfy stability requirements.

Procedures:

Stability analyses will be performed within the general guidelines shown in SCS publication TR-60, with the following additional provisions:

(1) The stability condition at the end-of-construction need not be analyzed if, in the opinion of the contractor, and mutually agreed to by the contracting officer, it would be less critical than the steady seepage or sudden drawdown condition. It will be analyzed, however, for embankments on foundations with soft clay deposits or embankments constructed primarily of fine-grained soils over 40 ft in height.

(2) Partial pool conditions shall be analyzed for municipal or irrigation reservoirs where fluctuations of the normal pool level may be expected. Total stress shear parameters shall be used and the minimum acceptable safety factor shall be 1.5.

(3) Analyses may be made using a computer program that has the capability of searching for the most critical failure surface. The computer program to be used and the method of analysis it employs shall be furnished to the contracting officer and will be subject to his or her approval. If noncomputer procedures are used, sufficient trials shall be made to determine the most critical failure surface for each condition analyzed. The use of computer methods of analysis other than those furnished will be subject to the approval of the contracting officer.

(4) For the sudden drawdown analyses, an acceptable alternative to the use of a composite strength envelope for embankment soils may be used if approved by the contracting officer.

(5) Minimum acceptable safety factors for the design selected shall be as outlined in TR-60.

(6) Assumptions used regarding the selection of shear parameters and the appropriate type of analyses shall be clearly stated. Assumptions used in developing an assumed phreatic surface and any uplift shall be clearly stated and shown.

Presentation of Results:

A graphicaltabular summary of the results of the slope stability analysis shall be included in the report. Only the most critical failure surfaces for each condition analyzed need be shown in the summary. A narrative summary of the rationale used in selecting methods of analyses, any assumptions pertinent to the analyses, and selection of design recommendations to improve stability shall be included in the report.

Complete computer printouts of stability analysis calculations need not be included in the report. However, this information must be available to the contracting officer on request.

SUBPART H SETTLEMENT ANALYSIS

Scope: The contractor shall estimate settlement in the embankment and foundation of the proposed structure as necessary to provide design parameters such as overbuild, joint gap parameters for conduits, and, as necessary, to predict the occurrence of problems such as excessive differential settlement. Recommendations for design measures to mitigate any predicted problems shall be included.

Procedures:

The settlement analyses shall be based on geological site conditions, engineering properties determined by laboratory tests, or by documented reference to data that can be correlated. Calculations shall be made for any potential differential settlement problems in a direction both transverse and parallel to the embankment centerline.

Recommendations based on laboratory tests, correlations, and calculations made shall include, but not necessarily be limited to: (1) maximum settlement in the foundation/cutoff trench and embankment, (2) estimated percentage of total settlement occurring during construction, (3) settlement beneath the principal spillway conduit, and (4) alternatives for correcting problem situations, including shaping of natural slopes, excavation and removal of highly compressible deposits, prewetting or removal of collapsible soils, or other special procedures such as preloading and staged construction for soft clays.

Presentation of Results:

A narrative summary of conditions analyzed and assumptions, together with results of the analyses, shall be included in the report. Any correlations used will be clearly stated.

SUBPART I SEEPAGE ANALYSIS

Scope: The contractor shall analyze the potential for seepage through the embankment, foundation, and abutments of the structure. Recommendations shall be made for any required design features.

Procedures:

Seepage analyses shall be based on site geology, soil and rock properties determined from field and laboratory tests, or on documented assumed properties based on correlation to similar, previously tested materials.

Analyses shall be by appropriate graphical or numerical methods suitable to the complexity and hazard of the site conditions. Assumptions or models used shall be clearly stated. Procedures listed in Soil Mechanics Notes No. 5 and No. 7 may be used.

Recommendations shall include, but will not necessarily be limited to: (1) embankment and/or foundation drain types, (2) dimensions and recommended gradation of materials for each drainage zone, (3) lateral and vertical extent of drainage installation with respect to embankment, (4) any special measures required for treating uplift or high seepage quantities such as relief wells, blanketing of reservor areas, seepage berms, etc.

Filters shall be designed in accordance with procedures in Soil Mechanics Note No. 1.

Seepage quantities shall be estimated, as necessary, to ensure that drainage zones and collector pipes are adequately sized and, where appropriate, for use in a water budget analysis of the reservoir. Procedures of Soil Mechanics Note No. 3, or other procedures generally accepted by the engineering profession, may be used.

Presentation of Results:

A narrative summary of the methods employed in the analysis of seepage and of recommended design measures, accompanied by suitable illustrations, if appropriate, shall be included in the report. Illustrations of flow nets or other models used in the analysis shall be included.

SUBPART J SEISMIC ASSESSMENT (For Sites in Zones 2 or 3 Seismic Risk Area)

Scope: The contractor shall evaluate the horizontal acceleration caused by earthquakes at the structure site. Cohesionless sand and silt deposits in the foundation shall be evaluated as to their liquefaction potential. Recommendations for defensive design features, if considered appropriate, shall be included.

Procedures:

Horizontal acceleration at the project site will be estimated by generally accepted seismic risk procedures. No less than the design accelerations shown in SCS publication TR-60 will be used, but higher values may be used if considered advisable by the contractor. Assumptions and methodology employed in arriving at the estimate will be clearly stated.

The liquefaction potential of saturated, cohesionless sand and silt foundation soils shall be evaluated by procedures outlined in Seed's article, "Simplified Procedure for Evaluating Soil Liquefaction Potential," Journal Soil Mechanics and Foundations Division, ASCE, Vol. 97, No. SM9, Sept. 1971, or by other methods approved by the contracting officer.

Defensive design measures to be considered shall include, but are not limited to: (1) embankment drains and transition zones, (2) increased top width and freeboard, and (3) foundation removal or improvement.

Presentation of Results:

A narrative summary of the results of the seismic evaluation shall be included in the report. Significant design recommendations shall be summarized and illustrated as necessary.

SUBPART K INSTRUMENTATION

Scope: The contractor shall evaluate the need for instrumentation to monitor performance of the structure during construction and on a longterm basis following construction. If instruments are recommended, specific design recommendations shall include instrument types, numbers, and locations. Recommendations shall include a plan for monitoring the instruments, and processing and recording the data, both during construction and on a longterm basis.

Procedures:

The degree of uncertainty in the assumptions made during design and the hazard class of the structure shall be considered in evaluating the need for instrumentation.

Consideration of instrumentation shall include, but not be limited to instruments needed to: (1) measure pore pressures during construction, (2) detect movements of structural elements, (3) measure effectiveness of seepage control measures, and (4) measure seismic events.

Instruments specified shall be identified as to type and accuracy requirements, but not as to brand names.

Instrument plans shall include the suggested frequency of readings, calibrations, data processing requirements, and "alarm" levels for all instruments, if appropriate.

If instrumentation is not recommended, a summary statement indicating the rationale for arriving at this decision shall be included.

Presentation of Results:

A narrative summary of the recommendations, together with any necessary illustrations, shall be included in the report. A separate section shall be included that contain recommendations for monitoring the instruments.

SUBPART L EMERGENCY SPILLWAY EVALUATION (SOIL MATERIALS)

Scope: The contractor shall provide an analysis of test results on emergency spillway samples and provide recommendations on parameters for design of the emergency spillway to resist breaching, design of emergency spillway side slopes, and drainage measures or other special structural measures to ensure the proper functioning of the spillway.

Procedures:

Parameters required for analysis of emergency spillway breaching using procedures of TR-52 shall be provided. These parameters shall include, but not necessarily be limited to, classification, PI, void ratio, liquidity index, and dispersion values. The parameters shall be based on laboratory tests on samples from representative strata in the emergency spillway. Samples tested are to be representative of the most erodible soil at any location in the bulk length of the spillway to a depth of 30 ft or to the base of the embankment, whichever is least, as specified in TR-52.

Supplemental tests needed to assess the erosion resistance of emergency spillway soils shall be performed and their effects on emergency spillway design analyzed.

Recommendations for cut slope configuration in excavated emergency spillways shall be based on appropriate engineering property tests and/or correlations, together with a stability analysis of the slope using accepted procedures.

Recommendations for other special spillway features such as drainage, stability, berms, etc., to mitigate unusual problems shall be clearly documented and justified.

Presentation of Results:

A narrative and/or tabular summary of data, accompanied by appropriate visual aids that adequately to convey recommendations for design, shall be included in the report.

A summary of any stability analyses performed, together with assumed material properties and computational methods employed, shall be furnished. Assumptions as to water table, soil profiles, etc. shall be clearly stated.

Appropriate drawings will be furnished for special design features recommended, together with sufficient narrative to adequately describe the features and furnish the basis for design.

Complete computations and computer printouts for the stability analysis are not required. However, this information must be made available to the contracting officer on request.

SUBPART M EMERGENCY SPILLWAY EVALUATION (ROCK)

Scope: The contractor shall provide recommendations for cut slopes, drainage features, or other special structural features necessary to ensure proper functioning of the spillway.

Procedures:

Analysis of rock material properties shall be based on geological information, rock cores, and appropriate engineering tests. Procedures of NETSC Note 25 may be used to classify the rocks and to provide qualitative guidance to design.

Slope stability analyses, if perfomed, will be based on material property tests or assumptions, as mutually agreed to by the contractor and contracting officer. Computational methods and other assumptions employed regarding rock profiles, cross sectional configurations, water tables, etc., shall be clearly stated.

Presentation of Results:

A summary of the analysis and recommendations for design shall be included in the report.

Appropriate geologic maps and drawings to document conclusions concerning the features of the rock affecting design shall be included. An example is shown in Figure 6-11, NETSC Note 25, which will be furnished by the contracting office on request.

Stability analyses, if performed, shall be summarized using appropriate visual and narrative aids to describe the analyses. Assumptions as to material properties, profiles, the water table, and computational methods employed shall be clearly stated and shown graphically where appropriate.

*U.S. GOVERNMENT PRINTING OFFICE : 1984 0-460-939/SCS-20042