UNITED STATES DEPARTMENT OF AGRICULTURE
SOIL CONSERVATION SERVICE
Washington, D. C. 20250

ENGINEERING DIVISION

June 18, 1973

Soil Mechanics Note No. 4: Preparation and Shipment of Undisturbed Core Soil Samples

Undisturbed soil samples collected during the preliminary or detailed site investigation represent a significant investment in time and funds. Therefore, preparation and shipment of these samples to the testing facility merit special attention. All possible precautionary and preventive measures must be used to minimize the detrimental effects of disturbance due to shock, drying, and freezing during collection, preparation and shipment.

Relatively firm, cohesive, non-sensitive materials require a minimum of extra care in preparation and shipment. They should be packed and marked to insure shipment in the upright position, to prevent damage or loss of individual tubes, and to prevent freezing.

Saturated dilatant or sensitive materials (ML, SM, CL-ML, some CL) require special attention to keep sample disturbance to a minimum. These samples must be kept in a vertical orientation and protected from shock at all times. Upon recovery of the sample, if drainage is necessary to firm up the sample slightly, a perforated expanding packer should be inserted in the bottom of the tube prior to disconnecting it from the drill stem. The sample should then be carried to a suitable drainage rack. When visual examination indicates that an adequate degree of drainage has been achieved, both ends should be sealed with non-perforated expanding packers. At this time, the tubes should be packed, on site, prior to any vehicular transportation.

Some fragile or brittle materials are susceptible to fracturing or cracking within the tubes if they are bumped or jarred, and they also require special handling.

Various types of protective containers have been constructed and used to ship core samples to testing facilities. Based on several years of observation of the condition of undisturbed samples and interpretation of laboratory test results, the most desirable container should incorporate the following features:

This Note submitted by personnel in the Soil Mechanics Laboratory and the Soil Mechanics Unit, Lincoln, Nebraska.

1. It should be reusable.

2. It should be so designed that sample tubes are maintained in a vertical position from packing on site to unpacking at the testing facility.

3. For sensitive soils, it should have internal design features and packing materials that will cushion or isolate the tubes from the adverse effects of jarring or shock action while in transit.

4. Internal packing and external marking should be provided to protect against freezing.

Descriptive information for four types of containers to transport cores follows:

Figure No. 1. Shipping box developed by the Soil Mechanics Laboratory, Lincoln, Nebraska; preferred for sensitive soils.

Figure No. 2. Shipping box developed by Charles R. Akers, Geologist, Louisiana; for sensitive soils.*

Figure No. 3. Shipping box developed by Aubrey C. Sanders, Jr., Geologist, North Carolina; for firm, non-sensitive soils.*

Figure No. 4. Shipping barrel developed by Wilber J. Campbell, Geologist, Oklahoma; for firm, non-sensitive soils.*

Consideration also should be given to the method of shipping undisturbed samples. The most rapid commercial method is air express or air freight, which minimizes time of transport and usually involves less handling. Railway Express shipments normally require only about one-half the time involved in transport and delivery by rail freight or motor freight when samples are to be shipped 300 miles or more. It should also be recognized that direct transportation by government vehicle may be the most practical method for some undisturbed samples - especially those that require extreme care in handling and transporting. The more rapid methods may be the most expensive; but, considering the resources expended in obtaining the undisturbed samples and the importance of reliable test results, they warrant serious consideration.

*Employee Suggestion - Submitted through Employee Incentive Awards Program

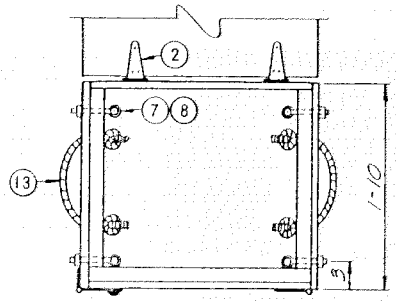

A. TOP VIEW
(lid open)

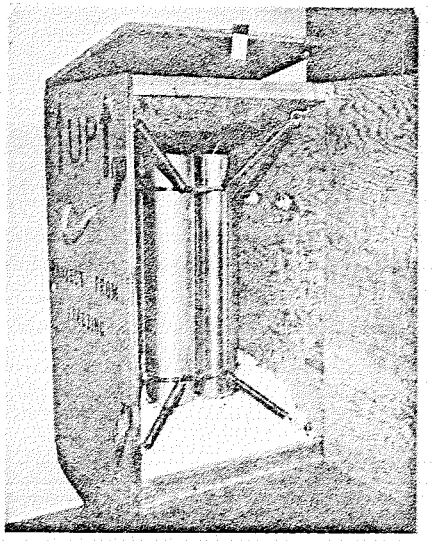

D. PHOTOGRAPH OF OPEN BOX

BILL OF MATERIALS

ITEM NO.	DESCRIPTION OF ITEM	QUANTITY
1	PLYWOOD, 4' X 8' X 3/4", EXTERIOR, GRADE AC, FSN 5530-051-0512	1 SHEET
2	HINGE, STRAP, 4" HEAVY DUTY W/SCREWS, FSN 5340-664-1311	4 EACH
3	HASP, HINGED, 4 1/2", W/SCREWS, FSN 5340-664-1667	3 EACH
4	SCREW, WOOD, STEEL, FLATHEAD, NO. 10 X 1 3/4", FSN 5305-010-1935	72 EACH
5	BOLT, MACHINE, 3/8" W/NUT TO SECURE HASPS, FSN 5306-010-9182	3 EACH
6	WASHER, FLAT, 3/8", FSN 5310-579-2071	3 EACH
7	EYE BOLT, 1/4" X 2", ZINC-PLATED, W/NUT	8 EACH
8	WASHER, FLAT, 1/4" FOR HASP BOLT, FSN 5310-639-7554	8 EACH
9	S HOOKS, 2" OPEN, ZINC-PLATED	8 EACH
10	CLAMP, ADJUSTABLE, HOSE, STEEL, WORM SCREW ADJUSTMENT	2 EACH
11	SPRING, EXPANSION	8 EACH
12	ADHESIVE, WOODWORKING, FSN 8040-598-9383	1 LB.
13	ROPE, NYLON, 1/2" DIA., SOLID BRAIDED	5 FEET
14	CUSHIONING MATERIAL, EXPANDED POLYSTYRENE FOAM, FSN 8135-181-7376	10 CU.FT.

FSN = FEDERAL STOCK NUMBER

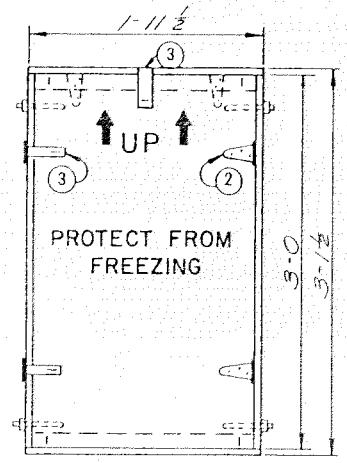

B. FRONT VIEW

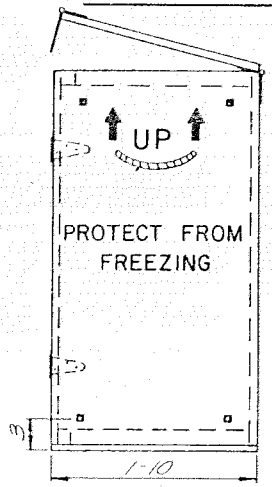

C. SIDE VIEW

NOTES:

A. ALL WOODEN COMPONENTS CAN BE SAWED FROM ONE SHEET OF PLYWOOD.

B. THIS SHIPPING BOX WILL ACCOMMODATE APPROXIMATELY THREE 3-IN. DIA. TUBES OR TWO 5-IN. DIA. TUBES UP TO 30 INCHES IN LENGTH. FOR LONGER TUBES, THE INSIDE HEIGHT OF THE BOX MUST BE A MINIMUM OF 6 INCHES GREATER THAN THE LENGTH OF THE TUBE.

C. ALL JOINTS TO BE GLUED AND FASTENED WITH SCREWS.

D. STENCIL ALL SIDES AS FOLLOWS (SEE VIEWS B AND C)

↑ UP ↑ PROTECT FROM FREEZING

E. AFTER SUSPENDING SAMPLES AS INDICATED ABOVE, ALL VOID SPACE MUST BE FILLED WITH A SUITABLE RESILIENT PACKING MATERIAL.

0 1/2 1
Scale in feet

FIGURE 1. S.M.L. BOX FOR SHIPPING UNDISTURBED CORES OF SENSITIVE SOIL

5,N-31,568.1

USDA-SCS-LINCOLN, NEBR. 1973

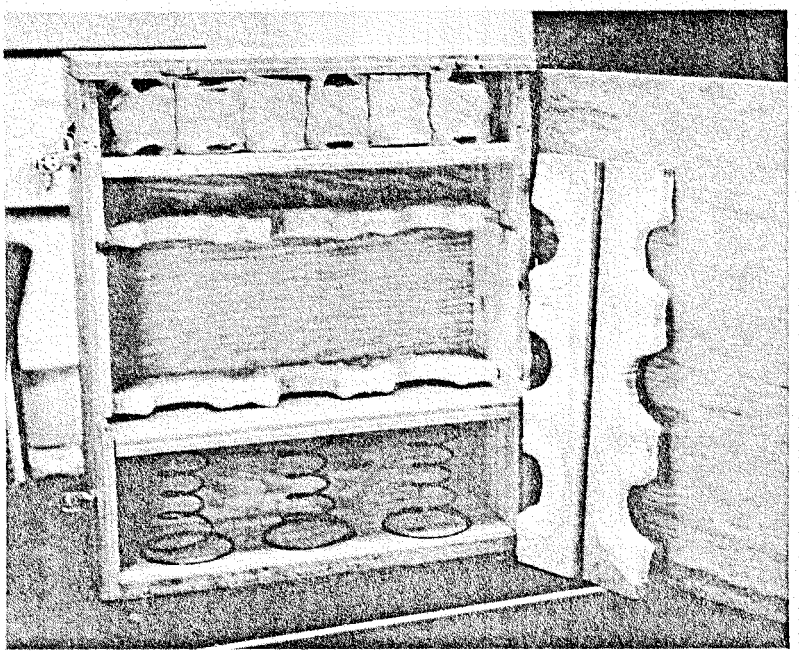

A. PHOTO SHOWS SPRING SUPPORTED, FLOATING BASE FOR SAMPLE TUBES; FLOATING TOP PLATE WITH FOAM RUBBER PACKING; SHAPED, RUBBER-PADDED LATERAL SUPPORTS.

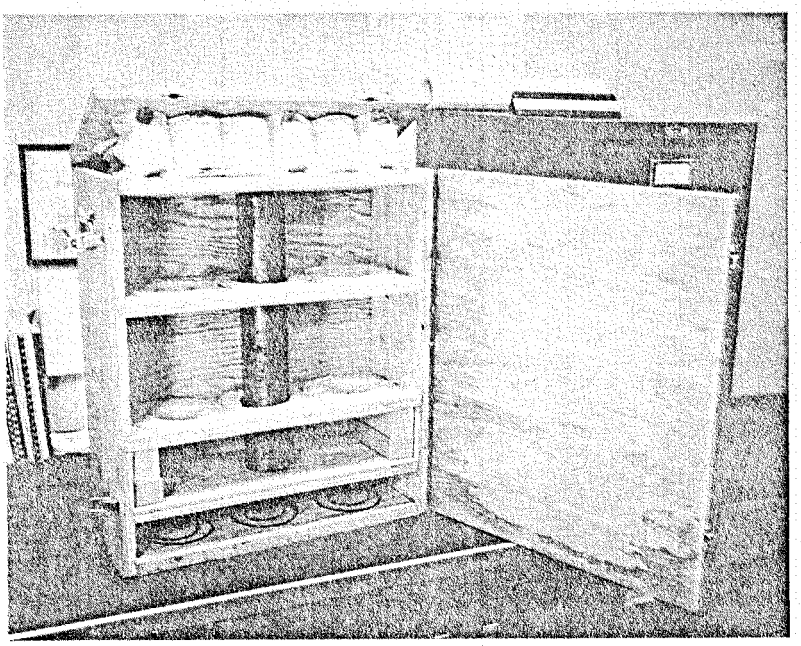

B. SAMPLE TUBE SUPPORTED VERTICALLY BY SPRING ACTION AND LATERALLY BY SHAPED, RUBBER-PADDED INSERTS.

FIGURE 2. LOUISIANA BOX FOR SHIPPING UNDISTURBED CORES.

NOTE:

JOINTS SHALL BE NAILED AND GLUED. NAILS SHALL BE 8d COMMON WIRE NAILS SPACED 8 INCHES ON CENTER. GLUE SHALL BE A WATERPROOF WOOD GLUE. BOX SHALL BE CONSTRUCTED OF 3/4-INCH EXTERIOR PLYWOOD. FASTEN TOP WITH 4 - 4 1/2" HINGED HASPS AS SHOWN IN DETAIL "B". CENTER HASPS ON EACH SIDE AND LOCK EACH WITH A 1/4" SPRING-LOADED STEEL PIN. ATTACH EACH PIN TO CRATE TOP WITH A 6" LONG CHAIN.

INSTRUCTIONS FOR USE OF SAMPLE BOX

1. THIS TYPE BOX SHOULD NOT BE USED TO SHIP DILATANT SAMPLES. SAMPLES OF THIS TYPE SHOULD BE SHIPPED IN BOXES EQUIPPED WITH SPRING-TYPE SUSPENSION.
2. SAMPLES SHOULD BE ADDITIONALLY CUSHIONED BY A PIECE OF SPONGE RUBBER PLACED IN THE BOTTOM OF EACH SECTION OF THE BOX.
3. IN ORDER TO FACILITATE INSERTION AND REMOVAL OF SAMPLE TUBES, A WIRE BAIL SHOULD BE MADE AND SECURELY FASTENED TO THE SAMPLE TUBES PRIOR TO PLACING THEM IN THE BOX. NUMBER 16 STEEL WIRE MAY BE USED FOR THIS PURPOSE. SOME TYPES OF SAMPLE TUBES WILL REQUIRE THE DRILLING OF TWO HOLES NEAR THE TOP TO PASS THE WIRE THROUGH. OSTERBERG AND SHELBY TUBES HAVE HOLES USED TO ATTACH THEM TO THE SAMPLER HEAD.

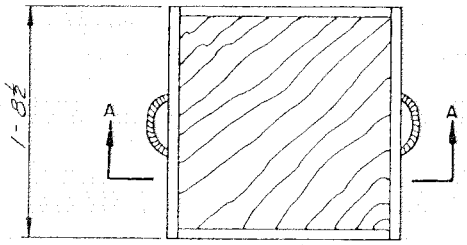

PLAN

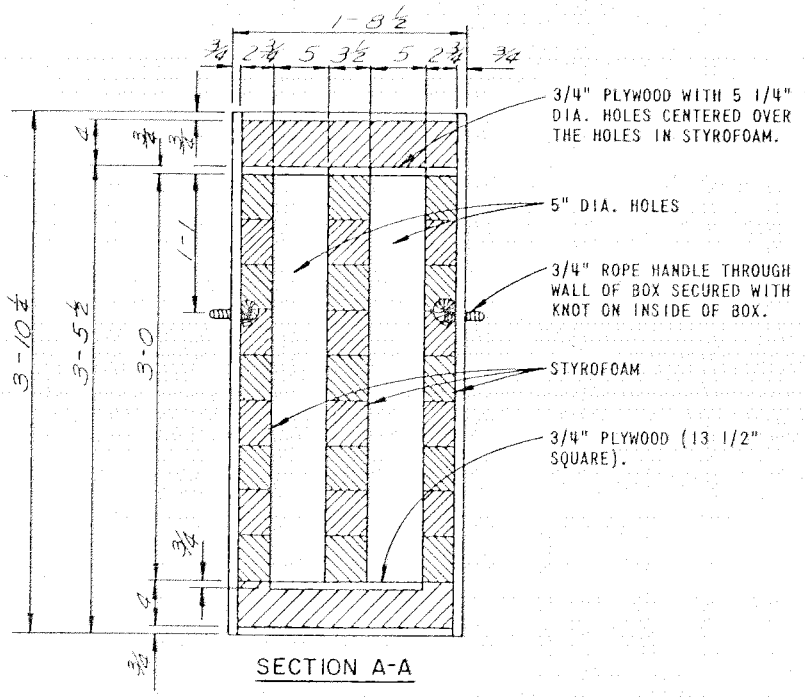

SECTION A-A

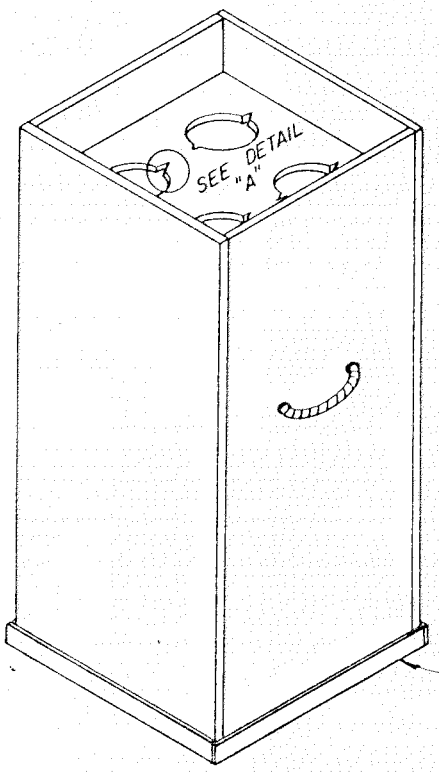

ISOMETRIC
(with top removed)

1 1/2" X 1 1/2" X 1/8" STEEL ANGLE AROUND BOTTOM ATTACHED WITH 7/8" FLATHEAD WOOD SCREWS SPACED APPROXIMATELY 6 INCHES ON CENTER ON BOTTOM AND SIDES OF CRATE.

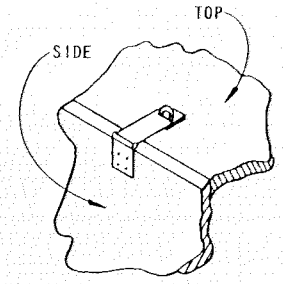

DETAIL "B"

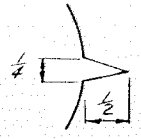

DETAIL "A"

FIGURE 3. NORTH CAROLINA SHIPPING CRATE FOR UNDISTURBED SAMPLES

5,N-31,568.3

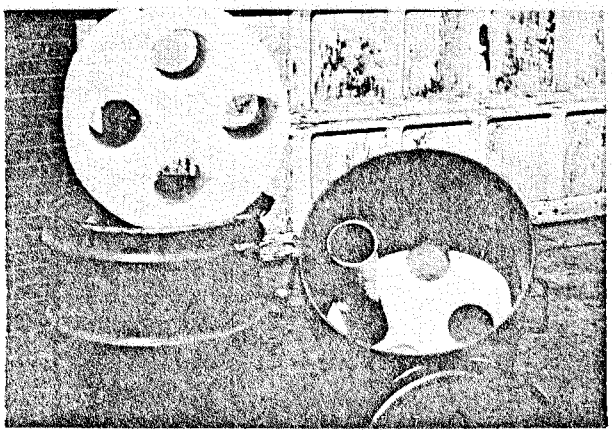

(a) 55-gallon oil barrels with sections of styrofoam insulation; welded handles on each side.

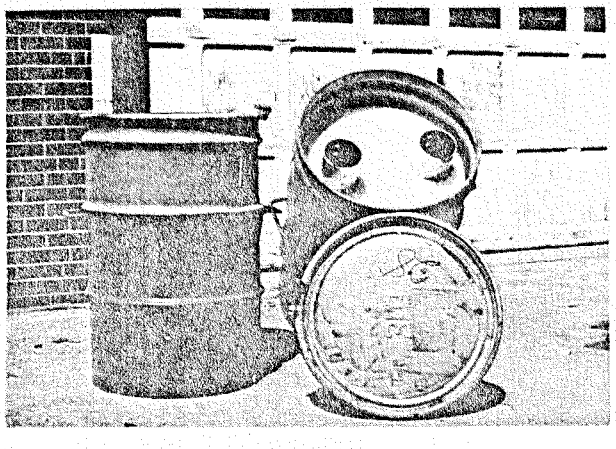

(b) Same as (a) showing barrel ready for shipment. Steel lids bolted on to provide tight seal.

Advantages:

1. Economical initial investment.
2. Longer life and less maintenance than plywood boxes.
3. Easy handling.
4. Tight seal and styrofoam offer maximum protection from weather.
5. Styrofoam easily removed to clean barrels.

Figure 4. Oklahoma shipping crate for undisturbed cores